MOD:XBC1005E

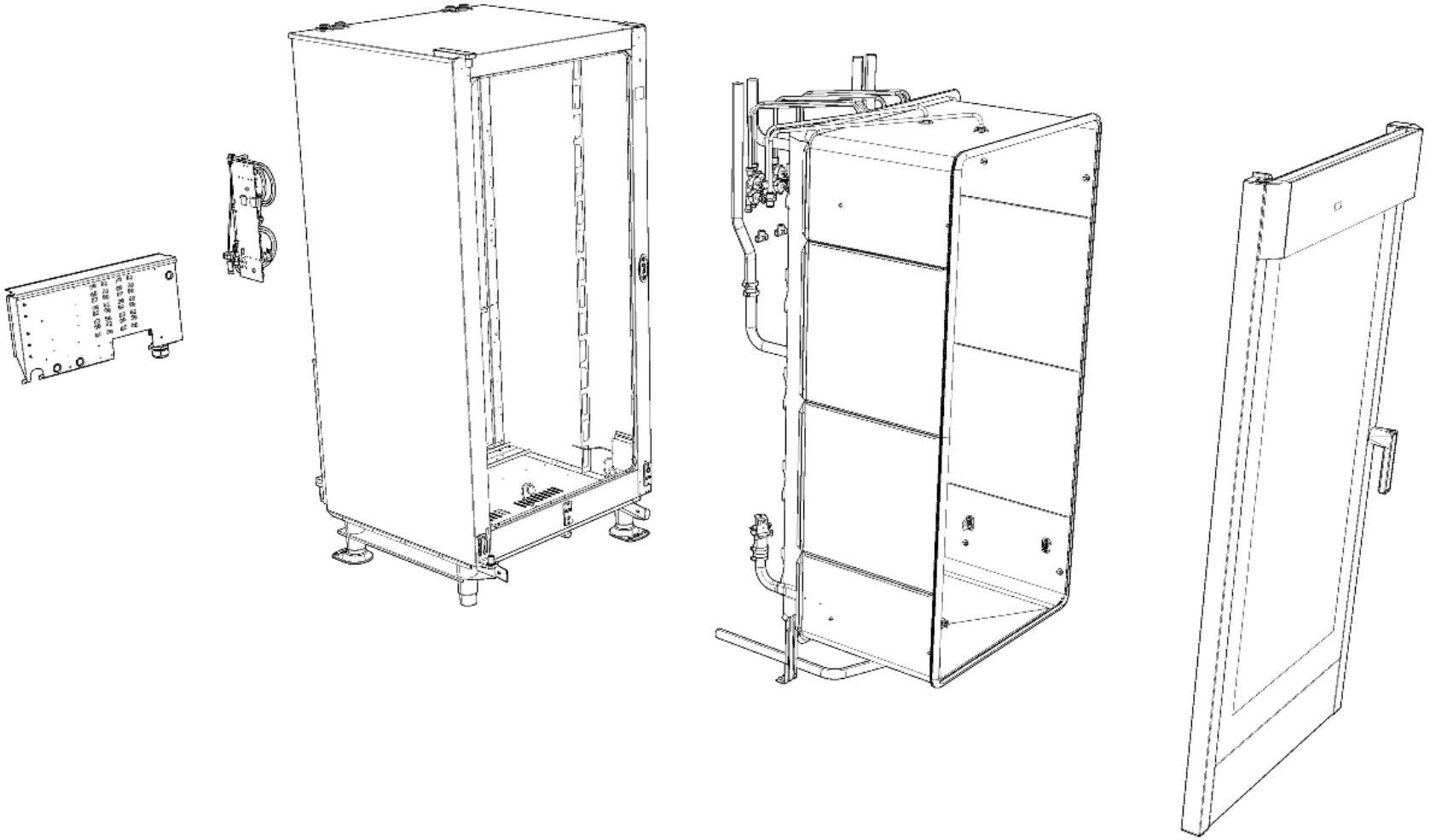

MOD:XBC1005E

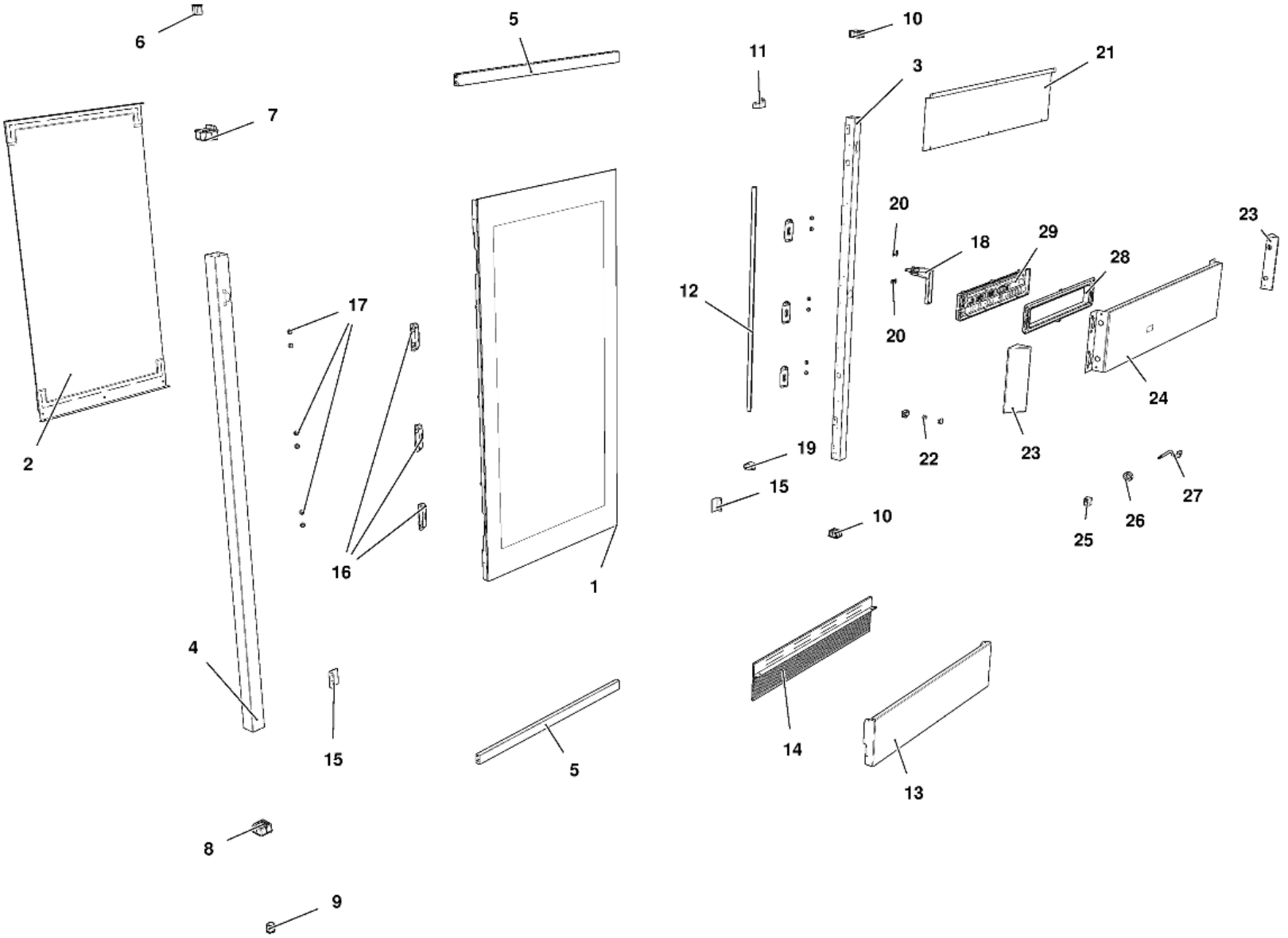

MOD:XBC1005E

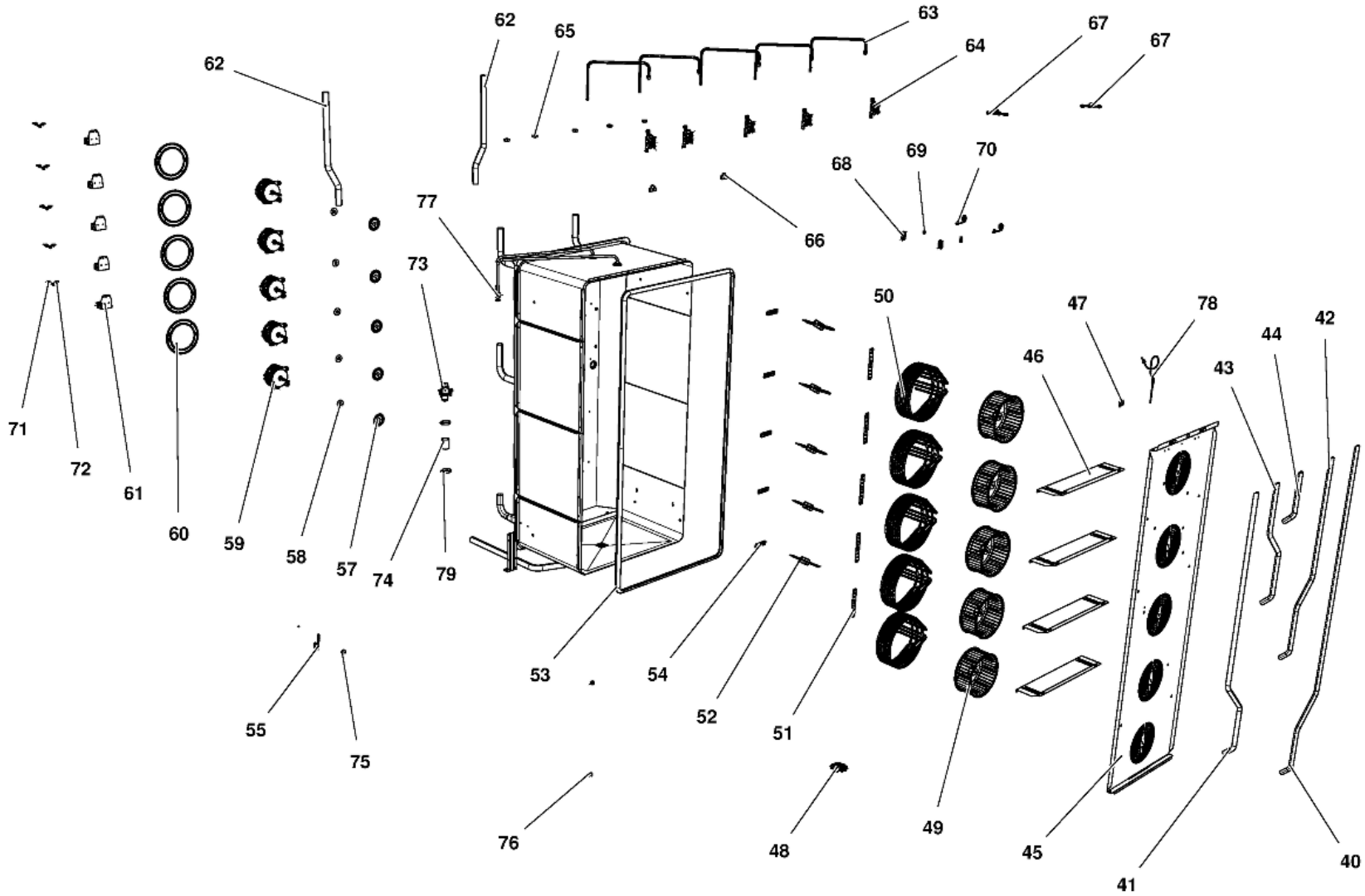

MOD:XBC1005E

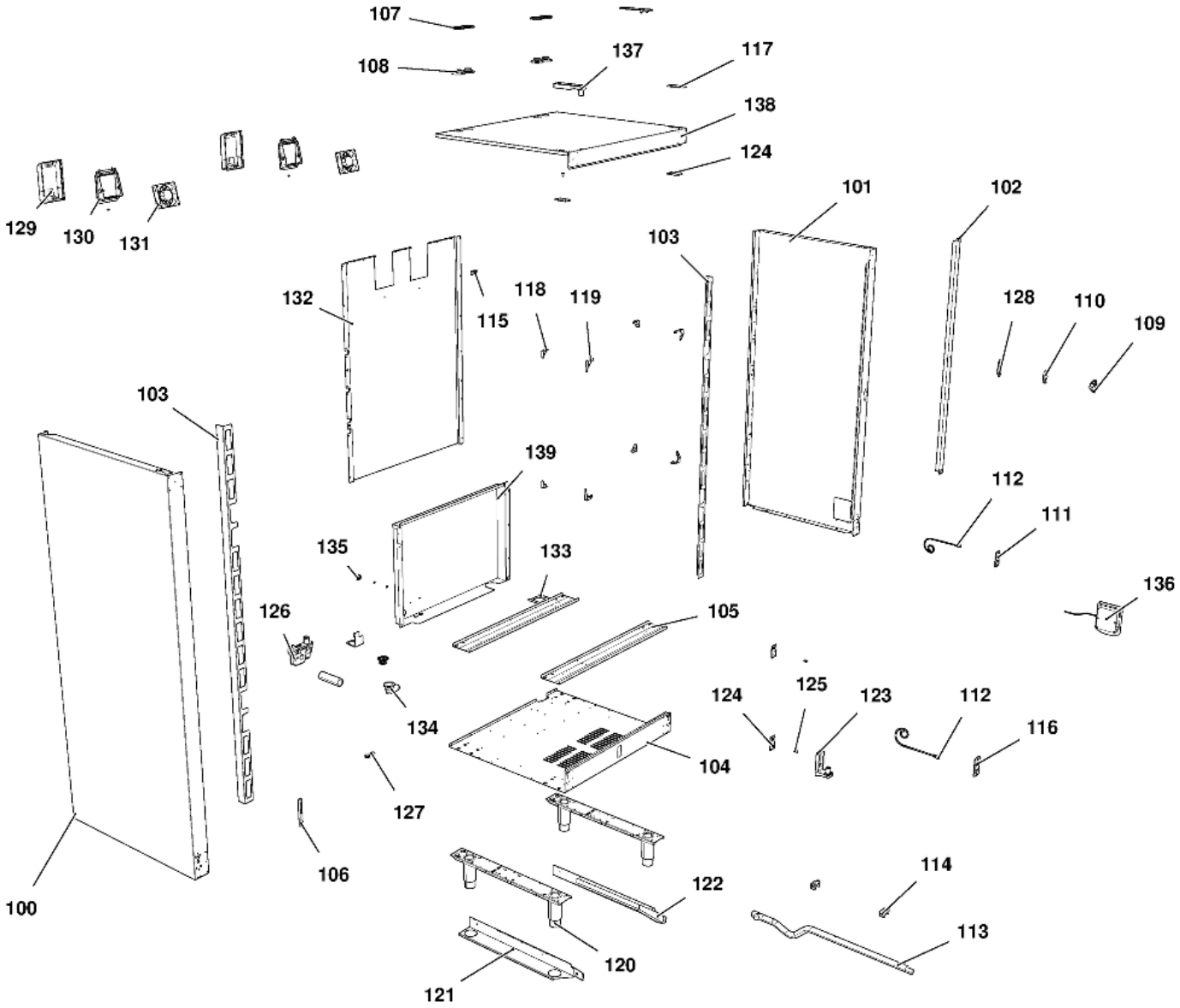

MOD:XBC1005E

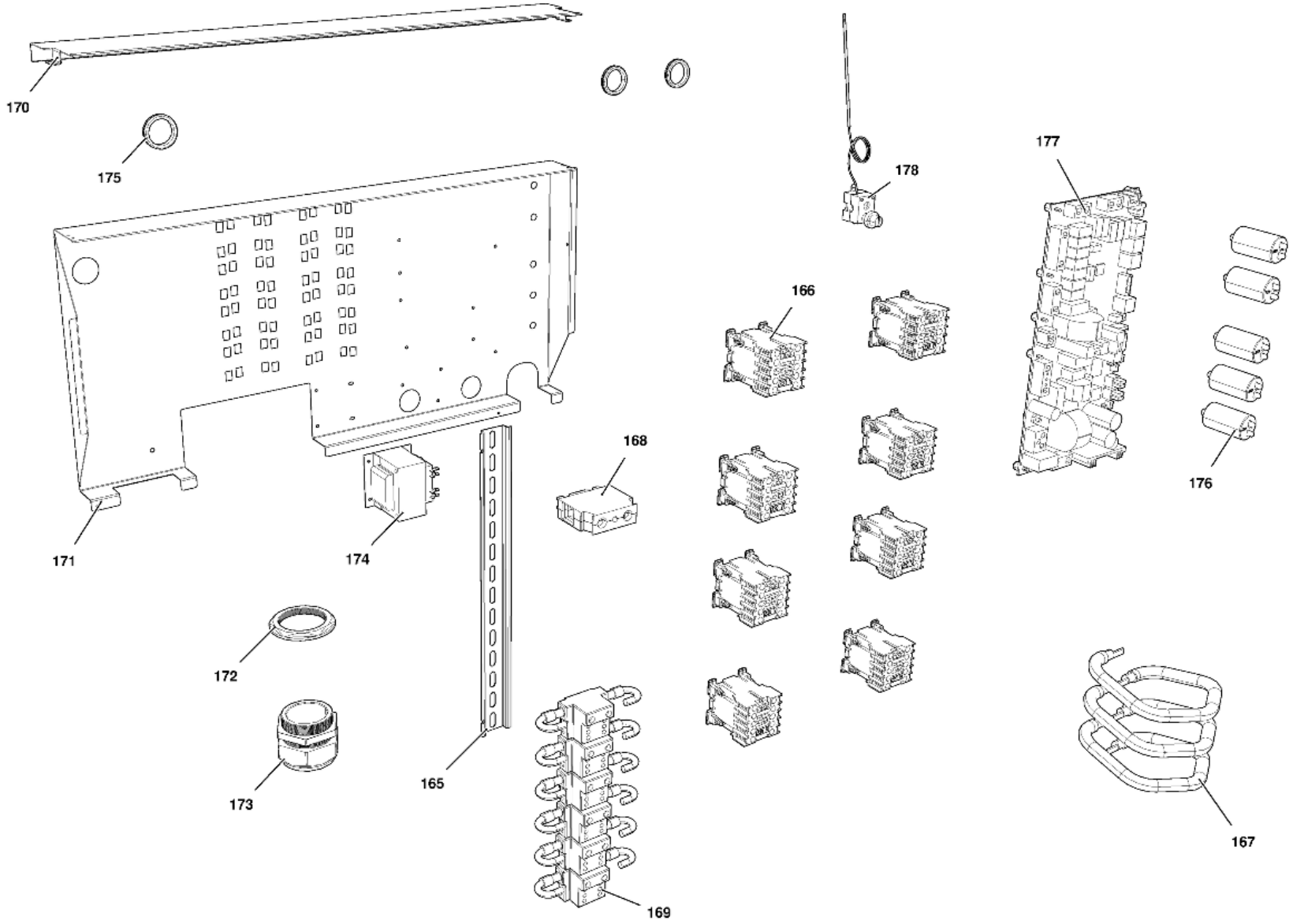

MOD:XBC1005E

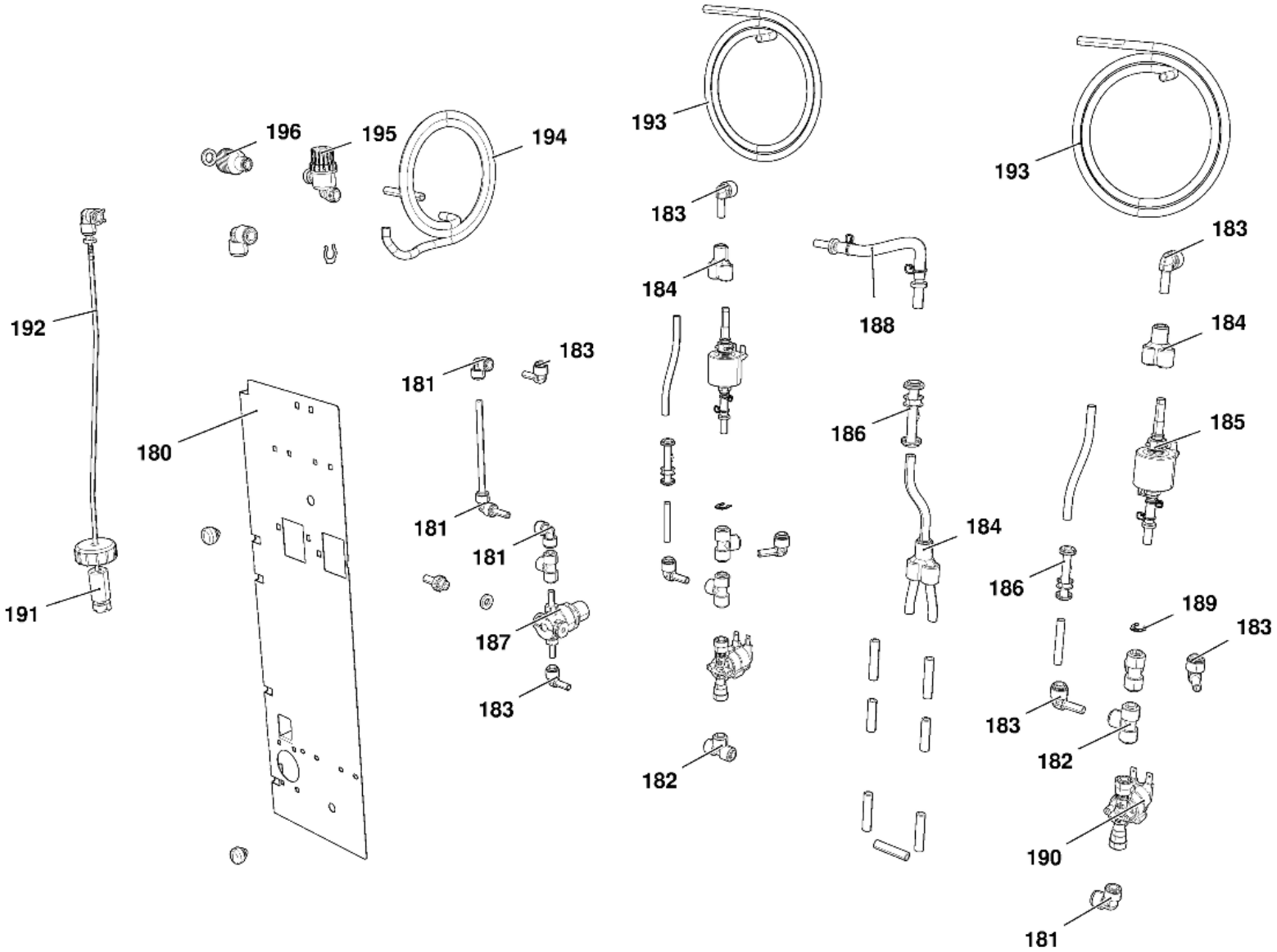

MOD:XBC1005E

IT

Descrizione codici

1	VT1161A	VETRO ESTERNO SER. 757X1467X5
2	VT1160A	VETRO INTERNO SER. 730X1395X6
3	TB2454A	COLONNINA DX 1005E AISI-304
4	TB2336A	COLONNINA SX SERIE 1000/3200/4000
5	0H3170A	LIST. INF/SUP XVC1004/XBC1004 40x
6	VM1511A	BOCCOLA LISCIA PERNO PORTA CHEFFT
7	VM1170B	TAPPO FULCRO SUP. PORTA XVC204/30
8	VM1171B	TAPPO FULCRO INF. PORTA XVC204/30
9	VM1510A	BOCCOLA SCANALATA PERNO PORTA XBC
10	VM1175A	TAPPO ESTETICO COLONNINA PORTA
11	VM1620A	SUPPORTO INF BARRA LED
12	LP1004B	BARRA ILLUMINAZIONE LED L1000
13	0H6458A	PROFILO INFERIORE PORTA XVC1005E/
14	GN1348E	GUARNIZIONE PORTA-CARRELLO GN1341
15	0H6445A	LAMIERA CAMMA PORTA BIG S.5E
16	VM1591A	STAFFA SPINGIVETRO INTERNO XVC100
17	VM1630A	TAPPO PREMI VETRO INTERNO
18	VM1180B	IMPUGNATURA MANIGLIA CT BT
19	VM1621A	SUPPORTO SUP BARRA LED
20	VM1490A	COPRI VITI MANIGLIA CHEFTOP BAKER
21	0H4450A	LAMIERA CHIUSURA POST. CRUSCOTTO
22	VE1030A	CALAMITA D=22,9mm PER MICROPORTA
23	0H6720A	FIANCHETTO CRUSCOTTO COMANDI
24	VT1170B	VETRO CRUSCOTTO SER. 757X170X4 XV
25	CE1290A	MORSETTO FEMMINA ESTRAIBILE CPF 5
26	CE1285A	FERRITE EMI ROUND MOD. 2643801502
27	CE1310A	CAVO COLLEGAMENTO POTENZA CONTROL
28	VM1145A	CORNICE CRUSCOTTO C.T.
29	PE1740C	SCHEDA CONTROLLO PE1705 CT BT
40	TB2334A	TUBO INT. UMIDITA' DX Ø16x1
41	TB2333A	TUBO INT. UMIDITA' DX Ø16x1
42	TB2332A	TUBO INT. UMIDITA' DX Ø16x1
43	TB2331A	TUBO INT. UMIDITA' SX Ø16x1
44	TB2330A	TUBO INTERNO UMIDITA' CENT. Ø16x1
45	0G1495A	CARTER ARIA SERIE 1005E
46	0G1396A	DISTANZIALE CARTER ARIA
47	0H6345A	PIASTRINA FORATA SUPP SONDA AL CU
48	0H2551A	TAPPO PER TUBO DI SCARICO LIQUIDI
49	VN1030A	VENTOLA D196 H81 39 PALE DADO M8
50	RS1205A	RES. CIRCOLARE 5600W 230V D230 6
51	GN1085A	GUARNIZIONE RESISTENZA 141x24 G6.
52	RS1215A	RES. PIANA 147W 105V D230 1 SPIRA
53	GN1392C	GN1006A-GUARNIZIONE PORTA XVC1005
54	GN1326A	GUARNIZIONE RESISTENZA 71x19 G6.2
55	PE1710A	SENSORE NUMERO GIRI MOTORE
57	0H4305A	DISCO TENUTA ALBERO MOTORE INOX S
58	GN1140A	GUARNIZIONE PORTAMOTORE STAMP.
59	VN1130A	MOTORE FORNO 330W 230V 50/60HZ
60	0H3586A	LAMIERA PROTEZIONE MOTORE ZINCATO
61	0H4851A	STAFFA CABLAGGIO CT BT -
62	TB1873A	TUBO CONVOGLIATORE FUMI SERIE 100
63	TB1515A	TUBO EST. UMIDITA' + RC1165A0
64	EL1361A	ELETTROVALVOLA TRI-STADIO JG D8-D
65	RC1170A	DADO M14 H=8 CH=22 INOX
66	EL1020A	RACCORDO INTERMEDIO "T" TUBO ø8
67	VM1955B	CORPO GIRANTE LAVAGGIO
68	VM1465A	COPERCHIO SONDA TEMPERATURA CHEFT
69	GN1285A	GUARNIZIONE SONDA DI TEMPERATURA
70	TR1106A	SONDA TEMPERATURA PT100 L2000
71	VM1610A	CLIP TWIST LOCK DIAM. 7,6-10,2 MM
72	RC1310A	FASCETTA RICHCO 140X4 CON CLIP
73	VE1135A	ATTUATORE VENTURI 220V 50/60 Hz S
74	TB1956A	TB1520A-TUBO NERO EPDM L=50
75	VM1635A	DISCO SUPPORTO MAGNETE
76	VM1820A	NOTTOLINO M6 CROMATO FISS. SUPPOR
77	EL1055A	RIDUZIONE INTERMEDIA D10-D8
78	SN1012A	SONDA CUORE MULTIPUNTO L2730
79	RC1378A	FASCETTA STRINGI TUBO ZINCATA
100	0D2182A	FIANCO SX XVC1005/4005
101	0D2183A	FIANCO DX XVC1005/4005
102	0H3280A	LAMIERA REGGI SROCCO XVC1004 XBC1
103	0H3750A	LAMIERA INOX RINFORZO FIANCO XVC1
104	0E1319A	FONDO EST SERIE 905E-1005E
105	0H3290A	TRAVERSO DI SOSTEGNO XVC1005E/400
106	0H6731A	PARATIA PROTEGGI STAFFA 1005E AIS
107	0H3790A	LAMIERA TENUTA CAMINO
108	GN1275A	GUARNIZIONE CAMINO SILICONE NERO
109	VM1190A	SCROCCO MANIGLIA DX CT BT
110	VM1192A	COPERCHIO SCROCCO MANIGLIA CT BT
111	VM1201A	PIASTRINA SUPPORTO MICROPORTA MAG
112	VE1020A	MICROINTERRUTTORE PORTA MAGNETICO
113	TB2298A	TUBO SCARICO ACQUA CARRELLATI GN1
114	VM2036A	SUPPORTO TUBO SCARICO ACQUA
115	VM1810A	TAPPO TENUTA ACQUA DX
116	VM1200A	PIASTRINA SUPPORTO MICROPORTA MEC
117	VM1195A	PIASTRINA COPRIFORI XVC204/304/50
118	VM1008A	ANGOLARE INT. SUPPORTO GUARNIZION
119	0H1450A	ANGOLO FACCIATA MUFFOLA INOX XB-X
120	PD1020A	LONGHERONE PIEDINI 2" REG H147-19
121	0H5045A	ASM GUIDE CARRELLO SX SERIE 1000
122	0H5044A	ASM GUIDE CARRELLO DX SERIE 1000
123	VM1160B	STAFFA INFERIORE PORTA CT BT
124	0H2560A	CONTROSTAFFA ZINCATA PORTA C.T.
125	VM1240A	TAPPO NYLON SUPPORTO CONTROSTAFFA
126	VL1005A	VASCA SIFONE
127	VM1505A	PASSAPARETE CON DIAFRAMMA
128	VM1455A	COPERCHIO PER SCROCCO FORNO XVC-X
129	VM1556A	PROTEZIONE VENTOLA RAFFREDAMENTO
130	VM1555A	SUPPORTO VENTOLA RAFFREDDAMENTO C
131	VN1163A	VENTOLA RAFFREDDAMENTO 230V
132	0F1473A	SCHIENA SUP 2 VENTOLE SERIE 1000-
133	0H7040A	LAMIERA SUPPORTO PRESSACAVO
134	VL1026A	CURVA PER TUBO DI SCARICO
135	VM1750A	MORSETTIERA A PETTINE
136	PE1971B	ASM SCHEDA UNOX.LINK MODBUS RJ45+
137	VM1165B	STAFFA SUPERIORE PORTA CT BT
138	0D2238A	COPERCHIO 2 VENTOLE SERIE 905-100
139	0F1465B	SCHIENA INFERIORE 1005E AISI-304
165	0H1852A	BARRA OMEGA PORTA 6 TELERUTTORI P
166	VE1115A	MINICONTATTORE QUADRIPOLARE 20 A
167	CE1770A	CAVO UNIPOLARE 16 MMQ L=280 TERMI
168	MR1011A	MORSETTO DI TERRA UL 125A PER BAR
169	CE1420A	MORSETTIERA UNIPOLARE 8 VIE Z16-8
170	0H7079A	LAMIERA PASSA CAVI
171	0H7035A	PORTACOMPONENTI EL 5 MOTORI
172	VE1629A	DADO PRESSACAVO PG 48
173	VE1628A	PRESSACAVO PG 48 RIDOTTO
174	VE1026A	TRASFORMATORE 230-21-12Vac 80VA
175	GN1045A	GUARN.ANTIVIBR. CAMINO-SCARICO
176	CN1003A	CONDENSATORE CORAZZATO 6,3 uF
177	PE1725E	SCHEDA POTENZA FORNI CT-BT S5.E
178	TR1136A	TERMOSTATO SIC. UNIP. 330°C
180	0H6441A	SUPPORTO IMPIANO IDRICO DOPPIO VE
181	EL1185B	RACCORDO GOMITO D8F-D8F
182	EL1020A	RACCORDO INTERMEDIO "T" TUBO ø8
183	EL1195B	RACCORDO GOMITO D8F-D8M
184	EL1115B	RACCORDO Y D8
185	VL1038A	POMPA VIBRAZIONE
186	EL1180A	RACCORDO NON RITORNO Ø8 Ø8 FEMMIN
187	VL1014A	RIDUTTORE DI PRESSIONE CON DISTRI
188	TB2429A	TUBO PVC Ø9X6 L 250 MM
189	EL1345A	CLIP BLOCCA PINZETTA RACCORDI Ø8
190	EL1411A	ELETTROVALVOLA H2O CON CHECK VALV
191	VL1044A	KIT FILTRO E AFFONDANTE
192	TB2242A	TUBO Ø6 LAVAGGIO 2M
193	TB2235A	ROCCHETTO DETERGENTE TUBO Ø8
194	TB2237A	TUBO Ø10 ALLACCIAMENTO RETE
195	VL1034A	FILTRO ACQUA Ø10 MESH100
196	RC1365A	RACCORDO JG FEMMINA 3/4"-10

MOD:XBC1005E

EN

Codes descriptions

1	VT1161A	SER. EXTERNAL GLASS 757X1467X5
2	VT1160A	SER. INTERNAL GLASS 730x1395x6
3	TB2454A	1005E RIGHT DOOR COLUMN
4	TB2336A	S.5E LEFT DOOR COLUMN 1000/3200/4
5	0H3170A	UPPER/LOWER DOOR LISTEL XVC1004/X
6	VM1511A	XBC/XVC SLEEK DOOR PIN BUSHING
7	VM1170B	UPPER DOOR FULCRUM CAP
8	VM1171B	DOOR LOWER FULCRUM CAP
9	VM1510A	XBC/XVC GROOVED DOOR PIN BUSHING
10	VM1175A	DOOR COLUMN BLANKING CAP
11	VM1620A	LED BAR LOWER SUPPORT
12	LP1004B	LEB LIGHTING BAR L1000
13	0H6458A	XVC1005E/XBC1005 LOWER DOOR PROFI
14	GN1348E	E SERIES DOOR-TROLLEY SEALING H14
15	0H6445A	E SERIES TROLLEY OVENS CAM PLATE
16	VM1591A	GLASS BRACKET INT. XVC1004
17	VM1630A	INTERNAL GLASS PUSHING CAP
18	VM1180B	ChefTop/BakerTop HANDLE HAFT
19	VM1621A	LED BAR UPPER SUPPORT
20	VM1490A	CHEFTOP/BAKERTOP HANDLE SCREWS CO
21	0H4450A	CLOSING PLATE BACK COVER
22	VE1030A	MAGNET FOR DOOR MICROSWITCH D=22,
23	0H6720A	CONTROL BOARD EXTERNAL LATERAL SI
24	VT1170B	XVC1005 CONTROL PANEL GLASS 757X1
25	CE1290A	EXTRACTABLE FEMALE TERMINAL CPF 5
26	CE1285A	EMI ROUND FERRITE MOD.2643801502
27	CE1310A	POWER - CONTROL BOARD CONNECTING
28	VM1145A	C.T. BOARD FRAME
29	PE1740C	CT BT CONTROL BOARD PE1705 + BOAR
40	TB2334A	INTERNAL RIGHT WATER PIPE Ø16x1
41	TB2333A	INTERNAL RIGHT WATER PIPE Ø16x1
42	TB2332A	INTERNAL RIGHT WATER PIPE Ø16x1
43	TB2331A	INTERNAL LEFT WATER PIPE Ø16x1
44	TB2330A	INTERNAL CENTRAL WATER PIPE Ø16x1
45	0G1495A	1005E SERIES FAN GUARD
46	0G1396A	B.T. C.T. FAN GUARD SPACER
47	0H6345A	CORE PROBE SUPPORT PERFORATED PLA
48	0H2551A	XBC/XVC ST.STEEL DRAIN COVER
49	VN1030A	MOTOR FAN D196 H81 39 BLADE NUT M
50	RS1205A	5600W 230V D230 6 TURNS HEATING E
51	GN1085A	HEATING ELEMENT GASKET 141x24 G6.
52	RS1215A	147W 105V D230 1 TURN FLAT ELEMEN
53	GN1392C	XVC1005-4005 DOOR GASKET - GN1006
54	GN1326A	ELEMENT SEALING 70X22X0.8
55	PE1710A	MOTOR REVOLUTIONS SENSOR
57	0H4305A	ST. STEEL MOTOR SHAFT SEALING DIS
58	GN1140A	MOLDED MOTOR SUPPORT GASKET
59	VN1130A	330W 230V 50/60HZ MOTOR
60	0H3586A	ZINCATE MOTOR GUARD PLATE XBC-XVC
61	0H4851A	BT CT WIRING SUPPORT BRACKET
62	TB1873A	CONVEYOR FUME TUBE SERIES 1005 Ø3
63	TB1515A	EXTERNAL WATER PIPE + RC1165A0
64	EL1361A	J.G. THREE-STAGE SOLENOID VALVE D
65	RC1170A	STAINLESS STEEL NUT M14 H=8 CH=22
66	EL1020A	INTERMEDIATE "T" CONNECTION ø8
67	VM1955B	WASHIG SYSTEM ROTOR
68	VM1465A	CHEFTOP TEMPERATURE PROBE COVER
69	GN1285A	NTC TEMPERATURE PROBE SEALING
70	TR1106A	TEMPERATURE PROBE PT100 L=2000
71	VM1610A	CLIP TWIST LOCK DIAM. 7,6-10,2 MM
72	RC1310A	140x4 CLAMP WITH CLIP
73	VE1135A	VENTURI ACTUATOR 220 V 50/60 Hz S
74	TB1956A	TB1520A - EPDM BLACK PIPE L=50
75	VM1635A	MAGNET HOLDING DISC
76	VM1820A	LATERAL SUPPORTS M6 FIXING BOLTS
77	EL1055A	INTERMEDIATE REDUCTION FROM D=10
78	SN1012A	MULTI.Point CORE PROBE L2730
79	RC1378A	HOSE CLAMP
100	0D2182A	XVC1005/4005 LEFT SIDE EXTERNAL P
101	0D2183A	XVC1005/4005 RIGHT SIDE EXTERNAL
102	0H3280A	XVC1004 XBC1004 SPRING LATCH HOLD
103	0H3750A	INOX PLATE REINFORCEMENT SIDE XVC
104	0E1319A	905E-1005E EXTERNAL BOTTOM PANEL
105	0H3290A	XVC1005E/4005E CROSS BAR
106	0H6731A	1005E BRACKET GUARD
107	0H3790A	CHIMNEY HOLDING PLATE
108	GN1275A	XBC/XVC BLACK CHIMNEY SEALING
109	VM1190A	CT BT RIGHT DOOR SPRING LATCH
110	VM1192A	CT BT DOOR SPRING LATCH COVER
111	VM1201A	MAGNETIC SUPPORT PLATE FOR DOOR M
112	VE1020A	MAGNETIC DOOR MICROSWITCH
113	TB2298A	TROLLEY OVENS WATER DRAIN PIPE Ø3
114	VM2036A	DRAIN WATER PIPE SUPPORT
115	VM1810A	WATER RIGHT CAP SEAL
116	VM1200A	DOOR MECHANIC MICROSWITCH SUPPORT
117	VM1195A	HOLES BLANKING PLATE XVC204/304/5
118	VM1008A	GASKET SUPPORT INTERNAL CORNER
119	0H1450A	XB-XV-XG ST. STEEL MUFFLE FRONT C
120	PD1020A	BRACKET FOR 2" ADJUSTABLE FEET H
121	0H5045A	1000 SERIES LEFT TROLLEY GUIDES
122	0H5044A	1000 SERIES RIGHT TROLLEY GUIDES
123	VM1160B	CT BT DOOR LOWER BRACKET
124	0H2560A	XBC/XVC ZINC PLAT. DOOR COUNTERBR
125	VM1240A	NYLON SUPPORT CAP
126	VL1005A	U-TRAP TANK
127	VM1505A	WALL PASSING WITH DIAPHRAGM
128	VM1455A	SPRING LATCH COVER XVC-XBC1004
129	VM1556A	XBC-XVC COOLING FAN GUARD
130	VM1555A	CT BT COOLING DOWN FAN SUPPORT
131	VN1163A	COOLING FAN 230V
132	0F1473A	1000-4000 SERIES EXTERNAL UPPER P
133	0H7040A	STAINLESS STEEL WIRE CLAMP SUPPOR
134	VL1026A	BEND FOR DRAIN PIPE
135	VM1750A	TERMINAL BOARD
136	PE1971B	UNOX.LINK MODBUS RJ45+USB
137	VM1165B	CT BT DOOR UPPER BRACKET
138	0D2238A	905E-1005E SERIES COVER
139	0F1465B	XAV4005EP EXTERNAL LOWER BACK PAN
165	0H1852A	OMEGA BAR 6 CONTACTORS HOLDER PR0
166	VE1115A	MINICONTACTOR WITH 4 POLES 20 A 2
167	CE1770A	UNIPOLAR CABLE 16 MMQ L=280
168	MR1011A	UL 125A GROUND TERMINAL
169	CE1420A	8 WAYS UNIPOLAR TERMINAL BOARD Z1
170	0H7079A	STAINLESS STEEL WIRE PASS SUPPORT
171	0H7035A	E SERIES COMPONENTS HOLDER PROFIL
172	VE1629A	WIRE CLAMP NUT PG 48
173	VE1628A	WIRE CLAMP PG48 REDUCED
174	VE1026A	TRANSFORMER 230-21-12Vac 80VA
175	GN1045A	ANTIVIBR.SEAL FOR EXHAUST CHIMNEY
176	CN1003A	CONDENSER6,3 Uf
177	PE1725E	E SERIES CHEFTOP-BAKERTOP POWER C
178	TR1136A	SAFETY THERMOSTAT UNIP. 330°C
180	0H6441A	DOUBLE VERTICAL WATER SUPPLY SUPP
181	EL1185B	D8F-D8F ELBOW FITTING
182	EL1020A	INTERMEDIATE "T" CONNECTION ø8
183	EL1195B	D8F-D8M ELBOW CONNECTION
184	EL1115B	Y D8 CONNECTION
185	VL1038A	VIBRATION PUMP
186	EL1180A	Ø8 Ø8 FEMALE NON-RETURN CONNECTIO
187	VL1014A	PRESSURE REDUCER WITH DISTRIBUTOR
188	TB2429A	PVC PIPE Ø9X6 L 250 MM
189	EL1345A	CLIP TO FIX Ø08 mm CONNECTION JOI
190	EL1411A	SOLENOID VALVE WITH CHECK VALVE
191	VL1044A	HOLD DOWN WEIGHT WITH FILTER
192	TB2242A	WASHING SYSTEM PIPE Ø6 2M
193	TB2235A	Ø8 DETERGENT PIPE COIL
194	TB2237A	Ø10 WATER MAIN CONNECTION PIPE
195	VL1034A	Ø10 MESH100 WATER FILTER
196	RC1365A	3/4"-10 JG FEMALE CONNECTION