Catalogo ricambi
Spare parts catalogue

TREVISO
TREVISO LX

Cod.83011216A - AGG.12/2021

SANREMO coffee machines s.r.l.
Via Bortolan, 52 - 31050 Vascon di Carbonera (Treviso) ITALY
Tel. +39.0422.498900 - Fax. +39.0422.448935
www.sanremomachines.com - E-mail: info@sanremomachines.com

Ed.12/2021

TAVOLA
DRAWING

1A

TREVISO

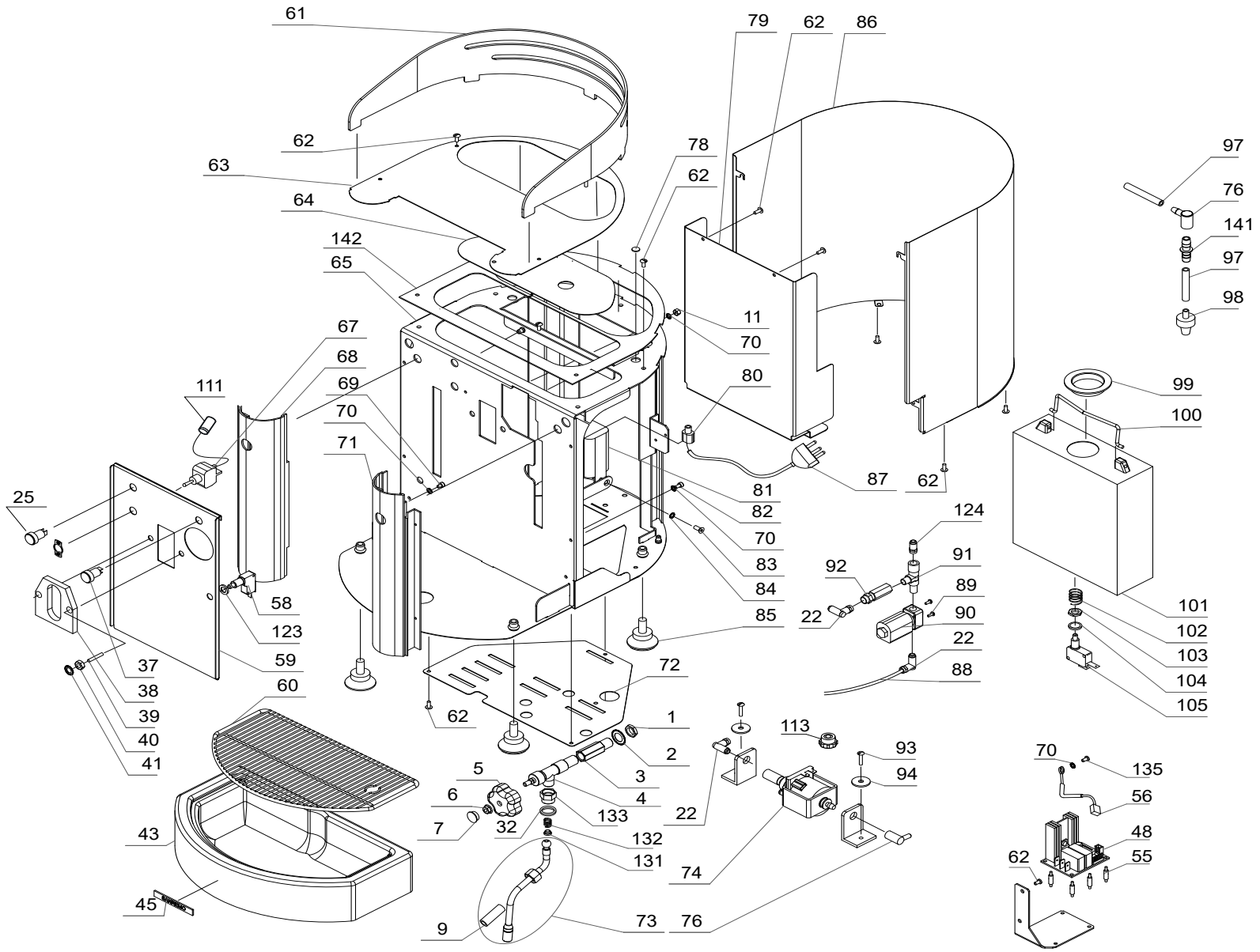

TREVISO

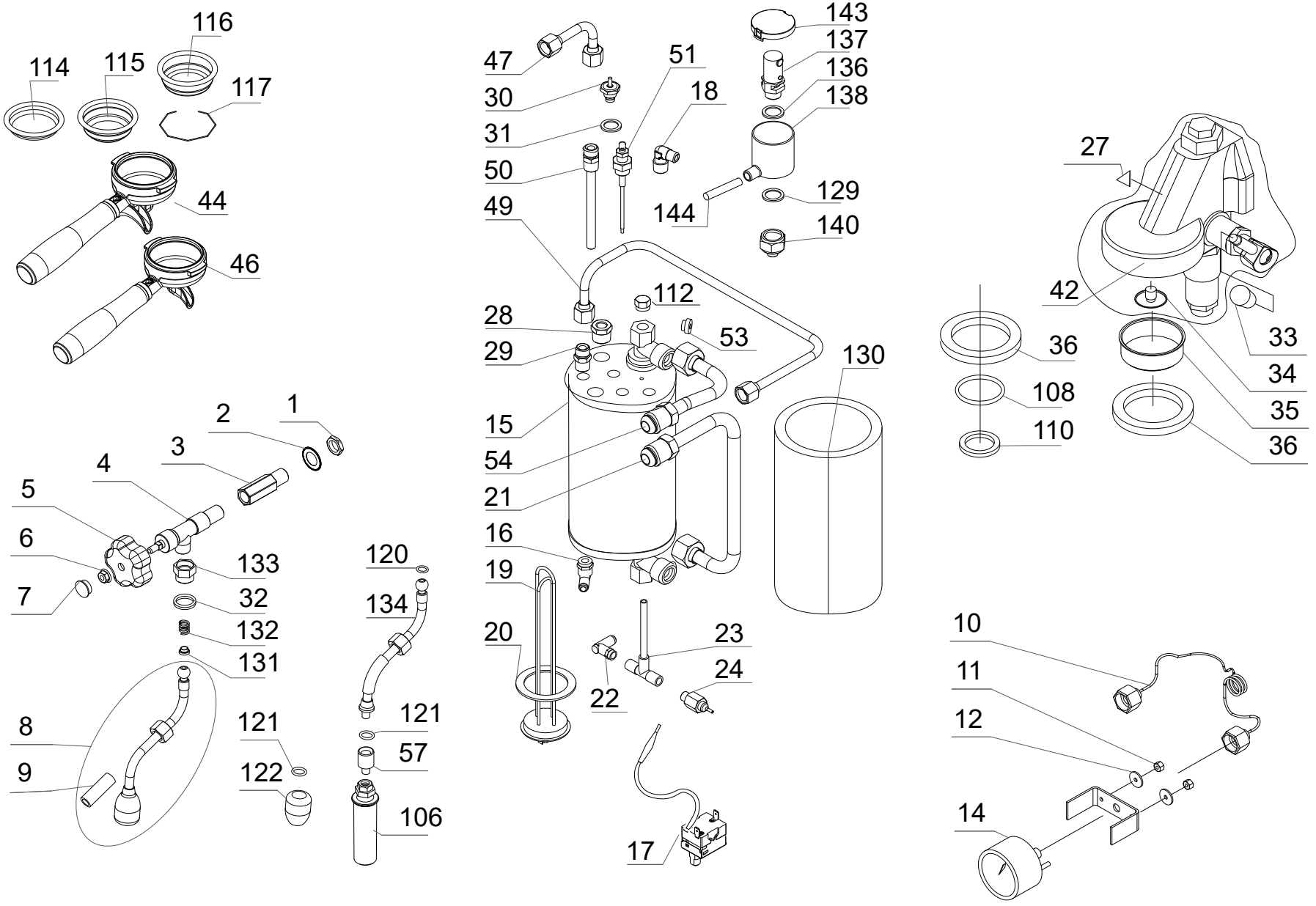
116
114
115
117
44
46
2
1
3
4
5
6
133
7
32
132
131
8
9
121
122
120
134
121
57
106
47
51
143
137
30
18
136
31
138
50
129
49
144
140
112
28
53
29
130
15
54
21
16
19
20
23
24
22
17
27
42
36
33
34
108
35
110
36
10
11
12
14

TREVISO

POS.	COD.	DESCRIZIONE	DESCRIPTION	BESCHREIBUNG	DESCRIPTION	DESCRIPCIÓN
1	10853112B	DADO DA 1/4" ES.	HEXAGON NUT 1/4“	MUTTER 1/4“ SECHS.	ECROU DE 1/4“ HEX.	TUERCA DE 1/4“ HEXAGONAL
2	10040048	RONDELLA D.14,5X24X1 DENT. ZN	SERRATED WASHER D.14.5X24X1 ZN	UNTERLEGSCHEIBE D.14,5X24X1 GEZAH. VERZINKT	RONDELLE D.14,5X24X1 DENT. ZN	ARANDELA D.14,5X24X1 DENT. GALV.
3	14852086A	PROLUNGA RUBINETTO L69,5 OT57	OT57 TAP EXTENSION L69.5	VERLÄNGERUNG HAHN L69,5 OT57	RALLONGE ROBINET L69,5 OT57	EXTENSIÓN GRIFO L69,5 OT57
4	10402113B	RUBINETTO CROMATO OT57	CHROME-PLATED OT57 TAP	VERCHROMTER HAHN OT57	ROBINET CHROMÉ OT57	GRIFO CROMADO OT57
5	10402085	MANOPOLA RUBINETTO	TAP KNOB	DREHKNOPF HAHN	BOUTON ROBINET	LLAVE DEL GRIFO
6	10809012	DADO 6MA ZN	NUT 6MA ZN	MUTTER 6MA VERZINKT	ECROU 6MA ZN	TUERCA 6MA GALV.
7	10402098	TAPPO SERIGRAFATO MANOPOLA RUBINETTO	WATER TAP KNOB CAP PRINTED	VERSCHLUSS DREHKNOPF (WASSER)HAHN SIEBGEDR.	BOUCHON SÉRIGRAPHIÉ BOUTON ROBINET	TAPÓN SERIGR. MANDO GRIFO
8	10402346A	LANCIA ACQUA CON SNODO COMPLETA	COMPLETE WATER NOZZLE WITH BALL JOINT	WASSERROHR KOMPLETT MIT GELENK	BUSE À EAU ARTIC. COMPLÈTE	LANZA AGUA CON ARTICULACIÓN COMPLETA
9	10753050	GOMMINO ANTISCOTTURA	ANTI-SCALD RUBBER PROTECTION	VERBRENNUNGSSCHUTZGUMMI	CAOUTCHOUC ANTI-BRULURE	GOMA ANTIQUEMADURAS
10	10002018A	TUBO MANOMETRO	PRESSURE GAUGE TUBE	MANOMETERSCHLAUCH	TUBE MANOMÈTRE	TUBO MANÓMETRO
11	10805512	DADO 4MA MEDIO ZN	MEDIUM-HT. NUT 4MA ZN	MUTTER 4MA MITTEL VERZINKT	ECROU 4MA MOYEN ZN	TUERCA 4MA MEDIANA GALV.
12	10805562	RONDELLA D.4x16x1.5 PIANA ZN	PLAIN WASHER D.4x16x1.5 ZN	UNTERLEGSCHEIBE D. 4x16x1.5 FLACH VERZINKT	RONDELLE D.4x16x1.5 PLATE ZN	ARANDELA D.4x16x1.5 PLANA GALV.
14	10552016A	MANOMETRO CALDAIA	BOILER PRESSURE GAUGE	MANOMETER KESSEL	MANOMETRE CHAUDIERE	MANOMETRO DE LA CALDERA
15	10002632C	CALDAIA D.100XH181 RACC. SALDATI OT57	BOILER D 100XH181, WELDED OT57 FITTINGS	KESSEL D.100XH181 ANSCHL. VERSCHWEISST OT57	CHAUDIÈRE D.100XH181 RACC. SOUDÉS OT57	CALDERA D.100XH181 RAC. SOLDADOS OT57
16	10853224A	RACCORDO RAP. A L 4 X 1/4" M GIREVOLE	SWIVEL QUICK-FIT ELBOW 4 X 1/4“ M	L-SCHNELLANSCHLUSS 4 X 1/4“ AG DREHBAR	RACCORD RAPIDE EN L 4 X 1/4“ M TOURNANT	UNION RAPIDA EN L 4 X 1/4“ M GIRATORIA
17	10111146	TERMOSTATO 125° CON RIARMO MAN.	THERMOSTAT 125° WITH MAN. RESET	THERMOSTAT 125° MIT MAN. RESET	THERMOSTAT125° À RÉARMEMENT MANUEL	TERMOSTATO 125° DE REARME MAN.
18	10857250A	RACCORDO L 6-1/4"M OT57	OT57 6-1/4”M L FITTING	VERSCHRAUBUNG L 6-1/4"M OT57	RACCORD L 6-1/4"M OT57	RACOR L 6-1/4"M OT57
19A	10452022B	RESISTENZA 1300W 120V OT57	1300W 120V OT57 HEATER	HEIZELEMENT 1300W 120V OT57	RÉSISTANCE 1300W 120V OT57	RESISTENCIA 1300W 120V OT57
19B	10452122B	RESISTENZA 1300W 230V OT57	1300W 230V OT57 HEATER	HEIZELEMENT 1300W 230V OT57	RÉSISTANCE 1300W 230V OT57	RESISTENCIA 1300W 230V OT57
20	10502018	RONDELLA D.56X41,5X2mm. PTFE	WASHER D.56X41.5X2mm PTFE	UNTERLEGSCHEIBE D.56X41,5X2mm PTFE	RONDELLE D. 56X41,5X2 mm PTFE	ARANDELA D. 56X41,5X2mm. PTFE
21	10002346A	TUBO SCAMBIATORE INFERIORE	BOTTOM HEAT EXCHANGER TUBE	UNTERES WÄRMETAUSCHERROHR	TUBE ÉCHANGEUR INFÉRIEUR	TUBO INTERCAMBIADOR INFERIOR

TREVISO

POS.	COD.	DESCRIZIONE	DESCRIPTION	BESCHREIBUNG	DESCRIPTION	DESCRIPCIÓN
22	10853210	RACCORDO RAP. A L 4X1/8" VITON M GIREVOLE	RAP. COUPLING AL 4X1/8" VITON M ROTATING	L-VERBINDUNGSSTÜCK 4X1/8" VITON M DREHBAR	RACCORD RAP. EN L 4X1/8" VITON M TOURNANT	RACOR RÁP. EN L 4X1/8" VITON M GIRATORIO
23	10042019	INIETTORE D.6	INJECTOR D.6	INJEKTOR D.6	INJECTEUR D.6	INYECTOR D.6
24	10655557C	VALVOLA DI ESPANSIONE OT57	OT57 EXPANSION VALVE	EXPANSIONSVENTIL OT57	DÉTENDEUR OT57	VÁLVULA DE EXPANSIÓN OT57
25A	10553030	SEGNALATORE LUMINOSO VERDE 120V	GREEN INDICATOR LIGHT 120V	LEUCHTANZEIGE GRÜN 120 V	TEMOIN LUMINEUX VERT 120V	INDICADOR LUMINOSO VERDE 120V
25B	10553034	SEGNALATORE LUMINOSO VERDE 230V	GREEN INDICATOR LIGHT 230V	LEUCHTANZEIGE GRÜN 230 V	TEMOIN LUMINEUX VERT 230V	INDICADOR LUMINOSO VERDE 230V
26	10553064	TARGHETTA ON-OFF	ON-OFF PLATE	SCHILD ON-OFF	PLAQUE ON-OFF	PLACA ON-OFF
27	10955013B	ETICHETTA TRIANG.SIMBOLO SUP.CALDA	HOT SURFACE SYMBOL TRI. LABEL	DREICK. AUFKLEBER SYMBOL HEIS-SE OBERFLÄCHE	ÉTIQUETTE TRIANG. SYMBOLE SUP.CHAUDIÈRE	ETIQUETA TRIANG. SIMBOLO SUP. CALIENTE.
28	10857092B	RACCORDO RIDUZIONE 3/8" M-1/4"F OT57	OT57 3/8" M-1/4"F ADAPTER	REDUZIERSTÜCK 3/8" M-1/4"F OT57	RACCORD RÉDUCTION 3/8"M-1/4"F OT57	RACOR REDUCCIÓN 3/8" M-1/4"H OT57
29	10855032C	RACCORDO DRITTO 8-1/4"M OT57	OT57 8-1/4"M STRAIGHT FITTING	GERADES ANSCHLUSSSTÜCK 8-1/4"M OT57	RACCORD DROIT L 8-1/4"M OT57	RACOR RECTO 8-1/4"M OT57
30	10652040A	VALVOLA DI SFIATO CALDAIA	BOILER AIR VENT VALVE	ENTLÜFTUNGSVENTIL HEIZKESSEL	PURGEUR CHAUDIÈRE	VÁLVULA DE PURGA CALDERA
31	10852180	RONDELLA RAME DA 1/4"	COPPER WASHER 1/4“	UNTERLEGSCHEIBE KUPFER 1/4“	RONDELLE CUIVRE DE 1/4“	ARANDELA DE COBRE DE 1/4“
32	10402185	GUARNIZIONE PTFE SNODO LANCIA TV	GASKET PTFE JOINT LANCE TV	PTFE - DICHTUNG GELENK ROHR TV	JOINT PTFE ROTULE BUSE TV	JUNTA PTFE ARTICULACIÓN LANZA TV
33	10052165	IMPUGNATURA LEVA GRUPPO	FILTER HEAD LEVER GRIP	HEBELGRIFF GRUPPE	POIGNEE LEVIER GROUPE	EMPUÑADURA DE LA PALANCA DEL GRUPO
34	10052141A	DIFFUSORE GRUPPO OT57	OT57 ASSY. DIFFUSER	VERTEILER GRUPPE OT57	DIFFUSEUR GROUPE OT57	DIFUSOR GRUPO OT57
35	10052120	DOCCIA A RETE GRUPPO	FILTER HEAD MESH SHOWERHEAD	NETZDUSCHE GRUPPE	DOUCHE A GRILLE GROUPE	DIFUSOR DEL GRUPO
36	10502160	GUARNIZIONE SOTTOCOPPA H 8,5mm	UNDER-CUP GASKET H 8.5mm	UNTERKAPPENDICHTUNG H 8,5 mm	GARNITURE DESSOUS DE COUPE H 8,5mm	DUCHA-RED
37A	10553031	SEGNALATORE LUMINOSO ROSSO 120V	RED INDICATOR LIGHT 120V	LEUCHTANZEIGE ROT 120 V	TEMOIN LUMINEUX ROUGE 120V	JUNTA DEL CARTER DEL ACEITE ALT. 8,2mm
37B	10553036	SEGNALATORE LUMINOSO ROSSO 230V	RED INDICATOR LIGHT 230V	LEUCHTANZEIGE ROT 230 V	TEMOIN LUMINEUX ROUGE 230V	JUNTA BLOQ. GRUPO PALANCA
38	10502130	GUARNIZIONE BLOCC. GRUP-PO LEVA	LEVER ASSEMBLY SEAL	DICHTUNG FESTST. GRUPPE HEBEL	GARNITURE BLOCAGE GROUPE LEVIER	PERNOS PRISIONEROS DEL GRUPO
39	10052134	PRIGIONIERI GRUPPO	ASSEMBLY STUD BOLTS	STIFTSCHRAUBEN GRUPPE	GOUJONS GROUPE	TUERCA 8MA MEDIANA GALV.
40	10802500	DADO 8MA MEDIO ZN	MEDIUM-HT. NUT 8MA ZN	MUTTER 8MA MITTEL VERZINKT	ECROU 8MA MOYEN ZN	ARANDELA D.8,2 DENT. INT. ZN

TREVISO

POS.	COD.	DESCRIZIONE	DESCRIPTION	BESCHREIBUNG	DESCRIPTION	DESCRIPCIÓN
41	10803521	RONDELLA D.8,2 DENT. INT. ZN	INT. SERRATED WASHER D 8.2 ZN	UNTERLEGSCHEIBE D.8,2 GEZAHNT INN. ZN	RONDELLE D 8.2 DENT.INT. ZN	GRUPO DE PALANCA COMPLETO OT57
42	10052005C	GRUPPO A LEVA COMPLETO OT57	OT57 COMPLETE LEVER ASSY.	HEBELGRUPPE KOMPLETT OT57	GROUPE LEVIER COMPLET OT57	CONJUNTO PORTAFILTRO 2 TAZAS INCLINADO
43	10024098A	VASCHETTA SCARICO	DRIP TRY	ABFLUSSWANNE	CUVETTE D'ECOULEMENT	CUBA DE VACIADO
44	KPOZO-VR2TZ12A	KIT PORTAFILTRO 2 TAZZE	2-CUP FILTER HOLDER KIT	KIT SIEBTRÄGER 2 TASSEN	KIT PORTE-FILTRE 2 TASSES	KIT PORTAFILTRO 2 TAZA
45	10955054B	ETICHETTA LOGO SAN REMO	SAN REMO LOGO LABEL	AUFKLEBER LOGO SAN REMO	ÉTIQUETTE LOGO SAN REMO	ETIQUETA CON LOGOTIPO SAN REMO
46	KPOZO-VR1TZ6A	KIT PORTAFILTRO 1 TAZZA	1-CUP FILTER-HOLDER KIT	KIT FILTERTRÄGEREINHEIT 1 TASSE	KIT PORTE-FILTRE 1 TASSE	KIT PORTAFILTRO 1 TAZA
47	10002364	TUBO PRELIEVO ACQUA CALDA AGG. PRESSOSTATO	HOTWATERRUN-OFFTUBEPRESSURESWITCHUPDATE	MODERNISIERTER HEISSWASSERBEZUGSROHR- DRUCKWÄCHTER	TUBE PRÉLÈVEMENT EAU CHAUDE MàJ. PRESSOSTAT	TUBO DEMANDA AGUA CALIENTE ACTUAL. PRESOSTATO
48	10112023	CENTRALINA TERMOSTECO PID. 120-230V	PID THERMOSTAT CONTROL UNIT 120-230V	STEUEREINHEIT TERMOSTECO PID. 120-230V	CENTRALE TERMOSTECO PID 120-230V	CENTRALITA TERMOSTECO PID. 120-230V
49	10002366	TUBO USCITA VAPORE AGG. PRESSOSTATO	STEAM DELIVERY TUBE PRESSURE SWITCH UPDATE	MODERNISIERTER DAMPFAUSGANGSROHR-DRUCKWÄCHTER	TUBE SORTIE VAPEUR MàJ PRESSOSTAT	TUBO SALIDA VAPOR ACTUAL. PRESOSTATO
50	10853059	PESCANTE	SUCTION PIPE	SAUGROHR	TUBE VIDANGE	TUBO ASPIRADOR SUMERGIDO
51	10112059C	SONDA LIVELLO 105mm	LEVEL SENSOR 105mm	NIVEAUSENSOR 105mm	SONDE NIVEAU 105mm	SONDA NIVEL 105mm
52	10012148	STAFFA FISS. CENTRALINA TERMOSTECO	TERMOSTECO CONTROL UNIT BRACKET	BEFESTIGUNGSBÜGEL STEUEREINHEIT TERMOSTECO	BRIDE FIX CENTRALE TERMOSTECO	SOPORTE FIJO CENTRALITA TERMOSTECO
53	10052153A	GIGLEUR FORO D. 3 mm OT57	OT57 GIGLEUR D 3 mm HOLE	GIGLEUR ÖFFNUNG D. 3 mm OT57	GICLEUR TROU OT57	BOQUILLA ORIFICIO D. 3 mm OT57
54	10002344A	TUBO SCAMBIATORE SUP.	UPPER EXCHANGER PIPE	ROHR TAUSCHER OB.	TUBE ECHANGEUR SUP.	TUBO CAMBIADOR SUP.
55	10355038	DISTANZIALE CIRCUITO FORI 3,5 L11,2	CIRCUIT SPACER HOLES 3.5 L11.2	ABSTANDHALTER KREISLAUF ÖFFNUNGEN 3,5 L11,2	ENTRETOISE CIRCUIT TOURS 3,5 L11,2	SEPARADOR CIRCUITO AGUJEROS 3,5 L11,2
56	10112194A	SONDA DI TEMPERATURA 2 VIE	2-WAY TEMPERATURE SENSOR	TEMPERATURSONDE 2-WEG	SONDE DE TEMPÉRATURE 2 VOIES	SONDA DE TEMPERATURA 2 VÍAS
57	10852129	RACC. CAPPUCCINATORE LANCIA TV-TVLX	UNION CAPPUCC. MAKER LANCE TV-TVLX	ANSCHL. MILCHAUFSCHÄUMERROHR TV-TVLX	RACC. BUSE À CAPPUCCINO BUSE TV-TVLX	RAC. EMULSIONADOR LANZA TV-TVLX
58	10112052	MICROINTERRUTTORE C/DADO COMANDO LEVA	LEVER CONTROL MICROSWITCH W/NUT	MIKROSCHALTER MIT MUTTER HEBELSTEUERUNG	MICRO-INTERRUPTEUR AVEC ECROU COMMANDE LEVIER	MICROINTERRUPTOR C/TUERCA PARA ACCIONAMIENTO PALANCA
59	10024170	PROTEZIONE FRONTALE	PROTECTIVE FRONT PLATE	FRONTSCHUTZ	PROTECTION AVANT	PROTECCION FRONTAL

TREVISO

POS.	COD.	DESCRIZIONE	DESCRIPTION	BESCHREIBUNG	DESCRIPTION	DESCRIPCIÓN
60	10024180A	GRIGLIA DI SCARICO INOX	STAINLESS STEEL DRAIN PLATE	ABFLUSSGITTER INOX	GRILLE D'ECOULEMENT INOX	REJILLA DE DESCARGA DE ACERO INOX.
61	10352045	FERMATAZZE FUME'	SMOKE-GREY CUP GUARD	TASSENHALTER RAUCHGRAU	ARRET TASSES FUME'	SUJETATAZAS GRIS "FUME'"
62	10805027	VITE TBL- M4x10 A2	SCREW TRUSS-HEAD- M4x10 A2	SCHRAUBE TBL- M4x10 A2	VIS TBL- M4x10 A2	TORNILLO TBL (DE CABEZA CURVA ANCHA) - M4x10 A2
63	10024165A	COPERCHIO SUPERIORE	TOP COVER	OBERER DECKEL	COUVERCLE SUPERIEUR	TAPA SUPERIOR
64	10024168	COPERCHIO SERBATOIO ACQUA	WATER TANK COVER	DECKEL WASSERBEHÄLTER	COUVERCLE RESERVOIR EAU	TAPA DEL DEPOSITO DEL AGUA
65	10024074E	TELAIO CAT. NERO	BLACK CAT. TREATED FRAME	RAHMEN TAUCHL. SCHWARZ	CHÂSSIS CAT. NOIR	BASTIDOR CAT. NEGRO
67	10553060	INTERRUTTORE BIPOLARE A LEVA	TWO-POLE LEVER SWITCH	ZWEIPOLIGER HEBELSCHALTER	INTERRUPTEUR BIPOLAIRE A LEVIER	INTERRUPTOR BIPOLAR DE PALANCA
68	10022356A	ESTRUSO SINISTRO ANOD. BRILLANTE	POLISHED ANOD. AL. LEFT EXTRUDED PIECE	FLIESSPRESSTEIL LINKS ELOX. GLÄNZEND	EXTRUDE GAUCHE ANOD. BRILLANT	PIEZA EXTRUIDA IZQUIERDA ANOD. BRILLANTE
69	10805060	VITE TCEI M4X6 A2 UNI 5931	SCREW (HEX CH. SOCK.) M4X6 A2 UNI 5931	INBUSSCHRAUBE M4X6 A2 UNI 5931	VIS TCEI M4X6 A2 UNI 5931	TORNILLO TCEI (CABEZA CIL.CON HEXAG. HEMBRA) M4X6 A2 UNI 5931
70	10803519	RONDELLA D.4,2 DENT.ZN DIN 6798	SERRATED WASHER D.4.2 ZN DIN 6798	UNTERLEGSCHEIBE D.4,2 GEZAH. VERZINKT DIN 6798	RONDELLE D.4,2 DENT.ZN DIN 6798	ARANDELA D.4,2 DENT. GALV. DIN 6798
71	10022354A	ESTRUSO DESTRO ANOD. BRILLANTE	POLISHED ANOD. AL. RIGHT EXTRUDED PIECE	FLIESSPRESSTEIL RECHTS ELOX. GLÄNZEND	EXTRUDE DROIT ANOD. BRILLANT	PIEZA EXTRUIDA DERECHA ANOD. BRILLANTE
72	10024192C	PIASTRA FONDO VERN. NERA	BLACK ENAMELLED BOTTOM PLATE	BODENPLATTE SCHWARZ LACK.	PLAQUE FOND LAQUEE. NOIRE	PLACA DE FONDO PINTADA COLOR NEGRO
73	10402348A	LANCIA VAPORE CON SNODO COMPLETA	COMPLETE STEAM NOZZLE WITH BALL JOINT	DAMPFROHR KOMPLETT MIT GELENK	BUSE VAPEUR ARTIC. COMPLÈTE	LANZA VAPOR CON ARTICULACIÓN COMPLETA
74A	10255011	POMPA A VIBRAZIONE 120V 60HZ	VIBRATION PUMP 120V 60HZ	VIBRATIONSPUMPE 120 V 60 HZ	POMPE A VIBRATION 120V 60HZ	BOMBA DE VIBRACION 120V 60HZ
74B	10255038	POMPA A VIBRAZIONE 9BAR 230V 50Hz	VIBRATION PUMP 9BAR 230V 50Hz	VIBRATIONSPUMPE 9BAR 230V 50Hz	POMPE À VIBRATION 9 BARs 230 V 50 Hz	BOMBA DE VIBRACIÓN 9BARES 230V 50Hz
75	10011524	SUPPORTO POMPA AD L	PUMP BRACKET	L-FÖRMIGE PUMPENHALTERUNG	SUPPORT POMPE AD L	SOPORTE BOMBA EN L
76	10255030	PIPETTA A L	L-SHAPED TUBE	L-FÖRMIGE PIPETTE	PIPETTE EN L	PIPETA EN L
78	10112202	MAGNETE COPERCHIO	COVER MAGNET	DECKELMAGNET	AIMANTS COUVERCLE	MAGNETO TAPA
79	10024196A	STAFFA MICRO VUOTO ACQUA VERN.NERA	BLACK ENAM. WATER VAC. MICRO. BRACKET	BÜGEL MIKROSCHALTER WASSERVAKUUM SCHWARZ LACK.	SUPPORT MICRO VIDE EAU LAQUE NOIR	ABRAZADERA MICROINT. DE VACIO DEL AGUA PINTADA CO. NEGRO

TREVISO

POS.	COD.	DESCRIZIONE	DESCRIPTION	BESCHREIBUNG	DESCRIPTION	DESCRIPCIÓN
80A	10105010	PASSACAVO CAVO HO5VV-F	GLAND FOR CABLE HO5VV-F	KABELDURCHGANG KABEL HO5VV-F	GUIDE-CABLE HO5VV-F	PASACABLES CABLE HO5VV-F
80B	10105012	PASSACAVO CAVO 3X16AWG	GLAND FOR CABLE 3X16AWG	KABELDURCHGANG KABEL 3X16AWG	GUIDE-CABLE 3X16AWG	PASACABLES CABLE 3X16AWG
81A	10112016A	REGOLATORE LIVELLO 120V 100K	LEVEL CONTROL 120V 100K	WASSERSTANDREGLER 120V 100K	RÉGULATEUR NIVEAU 120 V 100 K	REGULADOR NIVEL 120V 100K
81B	10112018A	REGOLATORE LIVELLO 230V 100K	LEVEL CONTROL 230V 100K	WASSERSTANDREGLER 230V 100K	RÉGULATEUR NIVEAU 230 V 100 K	REGULADOR NIVEL 230V 100K
82	10805060	VITE TCEI M4X6 A2 UNI 5931	HEX CAP SCREW M4X6 A2 UNI 5931	RUNDKOPF-INNENSE-CHSKANTSCHRAUBE M4X6 A2 UNI 5931	VIS TCEI M4X6 A2 UNI 5931	TORNILLO TCEI M4X6 A2 UNI 5931
83	10805303	VITE TSPEI M5X12 A2 UNI 5933	HEX C/SUNK SCREW M5X12 A2 UNI 5933	SENKKOPF-INNENSE-CHSKANTSCHRAUBE M5X12 A2 UNI 5933	VIS TSPEI M5X12 A2 UNI 5933	TORNILLO TSPEI M5X12 A2 UNI 5933
84	10803520	RONDELLA D5,3 DENT.ZN	SERRATED WASHER D5.3 ZN	UNTERLEGSCHEIBE D5,3 GEZAH. VERZINKT	RONDELLE D5,3 DENT.ZN	ARANDELA D5,3 DENT. GALV.
85	10352056	PIEDINO	FOOT	FUSS	PIED	PIE DE APOYO
86	10024160A	CARROZZERIA	HOUSING	GEHÄUSE	CARROSSERIE	CARROCERIA
87A	10102210	CAVO AL.SJT 3AWG16X2MT USA	POWER CABLE SJT 3AWG16X2MT USA	KABEL AL.SJT 3AWG16X2MT USA	CÂBLE AL.SJT 3AWG16X2MT USA	CABLE AL.SJT 3AWG16X2MT USA
87B	10105130	CAVO AL.H05VV-F 3X1X2MT SCHUKO 3FF 6,3	CABLE AL.H05VV-F 3X1X2MT SCHUKO 3FF 6.3	KABEL AL.H05VV-F 3X1X2MT SCHUKO 3FF 6,3	FIL AL.H05VV-F 3X1X2M SCHUKO 3FF 6,3	CABLE AL.H05VV-F 3X1X2MT SCHUKO 3FF 6,3
88	10909020	TUBO D4X2.5 TEFLON	TEFLON TUBE D4X2.5	SCHLAUCH D4X2.5 TEFLON	TUBE D4X2.5 TEFLON	TUBO D4X2.5 DE TEFLON
89	10809019	VITE TBEI M3X8 BRUNITE	SCREW (HEX CONV.SO.) M3X8 BURNISHED	SCHRAUBE TBEI M3X8 BRÜNIERT	VIS TBEI M3X8 POLIES	TORNILLO TBEI (CABEZA CURVA CON HEXAG.HEMBRA) M3X8 ACABADO “BRUNITE”
90A	10303018B	ELETTOVALVOLA. 2VIE 1/8" 120V	2-WAY SOLENOID VALVE 1/8" 120V	MAGNETVENTIL. 2-WEGE 1/8" 120V	ÉLECTROVANNE 2VIE 1/8" 120V	ELECTROVÁLVULA 2VÍAS 1/8" 120V
90B	10303010C	ELETTOVALVOLA. 2VIE 1/8" 230V	2-WAY SOLENOID VALVE 1/8" 230V	MAGNETVENTIL. 2-WEGE 1/8" 230V	ÉLECTROVANNE 2VIE 1/8" 230V	ELECTROVÁLVULA 2VÍAS 1/8" 230V
91	10857270	RACCORDO T 1/8" M/M/F CONICO OT57/60	OT57/60 1/8" M/M/F CONICAL T FITTING	T-VERSCHRAUBUNG 1/8" M/M/F KEGELFÖRMIG OT57/60	RACCORD T 1/8" M/M/F CONIQUE OT57/60	RACOR T 1/8" M/M/H CÓNICO OT57/60
92	10652027A	VALVOLA UNIDIREZIONALE	1-WAY VALVE	RÜCKSCHLAGVENTIL	VANNE UNIDIRECTIONNELLE	VÁLVULA UNIDIRECCIONAL
93	10805022A	VITE TBL- M4X20 A2 POLIERS	R/HEAD SCREW M4X20 A2 POLIERS	LINSENKOPFSCHRAUBE - M4X20 A2 POLIERS	VIS TBL- M4X20 A2 POLIERS	TORNILLO TBL - M4x20 A2 POLIERS
94	10809002	RONDELLA D6.4X24X2 PIANA ZN	PLAIN WASHER D6.4X24X2 ZN	UNTERLEGSCHEIBE D6.4X24X2 FLACH VERZINKT	RONDELLE D6.4X24X2 PLATE ZN	ARANDELA D6.4X24X2 PLANA GALV.

TREVISO

POS.	COD.	DESCRIZIONE	DESCRIPTION	BESCHREIBUNG	DESCRIPTION	DESCRIPCIÓN
97	10905010	TUBO SILICONE NEUTRO D.7X4 MM	NEUTRAL SILICONE TUBE D.7X4 MM	SILIKONSCHLAUCH NEUTRAL D.7X4 AGAG	TUBE SILICONE NEUTRE D.7X4 MM	TUBO DE SILICONA NEUTRO D.7X4 MM
98	10355178A	FILTRO IMPURITA' PER SERBATOIO	TANK IMPURITY FILTER	VERSCHMUTZUNGSFILTER FÜR BEHÄLTER	FILTRE IMPURETE‘ POUR RESERVOIR	FILTRO DE IMPUREZAS PARA DEPOSITO
99	10355105	TAPPO D.45 SERBATOIO	CAP D.45 TANK	DECKEL D.45 TANK	BOUCHON D.45 RÉSERVOIR	TAPÓN D.45 DEPÓSITO
100	10353500	MANIGLIA SERBATOIO	TANK HANDLE	GRIFF BEHÄLTER	POIGNEE RESERVOIR	TIRADOR DEL DEPOSITO
101	10353243B	SERBATOIO LT 3,4 H=280mm	TANK L 3.4 H=280mm	BEHÄLTER L 3,4 H=280 mm	RESERVOIR LT 3,4 H=280mm	DEPOSITO L 3,4 ALT.=280mm
102	10652072	MOLLA MICRO VUOTO ACQUA	WATER VACUUM MICRO SPRING.	FEDER MIKROSCHALTER WASSER-VAKUUM	RESSORT MICRO VIDE EAU	MUELLE MICROINTERRUPTOR DE VACIO DEL AGUA
103	10809040	DADO M11X1 PER MICRO	NUT M11X1 FOR MICRO	MUTTER M11X1 FÜR MIKRO	ÉCROU M11X1 PER MICROCONTACT	TUERCA M11X1 PARA MICROINT.
104	10502028	OR 3037 VITON	OR 3037 VITON	OR 3037 VITON	OR 3037 VITON	OR 3037 VITON
105	10112056	MICRO VUOTO ACQUA	WATER VACUUM MICROSWITCH	MIKROSCHALTER WASSERVAKUUM	MICRO VIDE EAU	MICROINTERRUPTOR DE VACIO DEL AGUA
106	10402302	CAPPUCINATORE COMPLETO GOCCIA	CAPPUCCINO MAKER COMPLETE GOCCIA	MILCHAUFSCHÄUMER KOMPLETT GOCCIA	BUSE À CAPPUCINO COMPLET GOUTTE	EMULSIONADOR COMPLETO GOCCIA
108	10502070A	OR 3187 PER MAZZOCCO D47,2X2,62	OR 3187 FOR MAZZOCCO D47.2X2.62	OR 3187 FÜR "MAZZOCCO” D47 ,2X2,62	OR 3187 POUR MAZZOCCO D 47,2X2,62	OR 3187 PARA JUNTA TÓRICA D47,2X2,62
110	10502050	GUARNIZIONE TENUTA CAPSULA	CAPSULE SEAL GASKET	DICHTUNG KAPSELABDICHTUNG	JOINT ÉTANCHÉITÉ CAPSULE	JUNTA ESTANQUEIDAD CÁPSULA
111	10252316	FILTRO DEM 701Y2 0,47UF(X2) CABL.C/FAST	FILTER	FILTER DEM	FILTRE DEM	FILTRO DEM
112	10857022B	RACCORDO TAPPO 1/8"M OT57 GR.	CAP STRAIGHT FITTING	GERADE VERSCHRAUBUNG DECKEL	RACCORD DROIT BOUCHON	RACOR RECTO TAPÓN
113	10355150A	FILTRO POMPA A.F/M3/8" OTT.510L	PUMP FILTER	FILTERPUMPE	FILTRE POMPE	FILTRO BOMBA
114	10052220A	FILTRO CIECO	BLIND FILTER	BLINDFILTER	FILTRE NON PERCE	FILTRO CIEGO
115	10052074A	FILTRO 2 TAZZE	2-CUP FILTER	2-TASSEN-FILTER	FILTRE 2 TASSES	FILTRO 2 TAZAS
116	10052072	FILTRO 1 TAZZA	1-CUP FILTER	1-TASSEN-FILTER	FILTRE 1 TASSE	FILTRO 1 TAZA
117	10052050	MOLLA FERMA FILTRO 1,2	FILTER RETAINER SPRING 1, 2	SIEBHALTEFEDER 1,2	RESSORT ARRÊT FILTRE 1.2	MUELLE SUJETA FILTRO 1,2
120	10502041A	OR 2025 EPDM D6,07X1,78 DIF. ACQUA	WATER DIFF. OR 2025 EPDM D 6.07X1.78	O-RING 2025 EPDM D6,07X1,78 DIF. WASSER	OR 2025 EPDM D6,07X1,78 DIF. EAU	OR 2025 EPDM D6,07X1,78 DIF. AGUA

TREVISO

POS.	COD.	DESCRIZIONE	DESCRIPTION	BESCHREIBUNG	DESCRIPTION	DESCRIPCIÓN
121	10505018	OR6 EPDM D.7,2X1,9 DOCCIA ACQUA	O RING 6 EPDM D.7.2X1.9 WATER SHOWERHEAD	O-RING 6 EPDM D.7,2X1,9 WASSER-DUSCHE	OR6 EPDM D.7,2X1,9 DOUCHE EAU	OR6 EPDM D.7,2X1,9 DUCHA DEL AGUA
122	10402140A	DOCCIA EROGAZIONE ACQUA	BOILER OUTLET	WASSERABGABEDUSCHE	DOUCHETTE SORTIE EAU	ROCIADOR SALIDA AGUA
123	10355030	DISTANZIALE MICROINTER-RUTTORE LEVA EROGOZIONE	DISPENSING LEVER MICROSWITCH SPACER	DISTANZSTÜCK MIKROSCHALTER HEBEL ABGABE	ENTRETOISE MICRO-INTERRUP-TEUR LEVIER DISTRIBUTION	DISTANCIADOR MICROINTERRUP-TOR PALANCA DE SUMINISTRO
124	10853204A	RACCORDO RAP. DRITTO 4X1/8"M	QUICK-FIT STRAIGHT COUPLER 4X1/8“M	SCHNELLANSCHLUSS GERADE 4X1/8“ AG	RACCORD RAPIDE DROIT 4X1/8“M	UNION RAPIDA RECTA 4X1/8“M
129	10852218	RONDELLA RAME D.16,8XD25XH1,5MM	COPPER WASHER D.16,8XD25XH1,5MM	UNTERLEGSCHEIBE KUPFER D.16,8XD25XH1,5MM	RONDELLE CUIVRE D.16,8XD25XH1,5MM	ARANDELA COBRE D.16,8XD25XH1,5MM
130	10025500	PANNELLO MELAMINICO TV	MELAMINE PANEL TV	MELAMINBLENDE TV	PANNEEAU MÉLAMINIQUE TV	PANEL MELAMÍNICO TV
131	10402183A	GUIDA MOLLA PER SNODO LANCIA TV	SPRING GUIDE FOR LANCE JOINT TV	FEDERFÜHRUNGSSCHIENE FÜR GELENK ROHR TV	GUIDE RESSORT POUR ARTIC. BUSE TV	GUÍA MUELLE PARA ARTICULA-CIÓN LANZA TV
132	10402182A	MOLLA PER SNODO LANCIA TV	SPRING FOR LANCE JOINT TV	FEDER FÜR GELENK ROHR TV	RESSORT POUR ARTIC. BUSE TV	MUELLE PARA ARTICULACIÓN LANZA TV
133	10402180	RACC. RIDUZIONE PER SNODO LANCIA TV	REDUCER UNION FOR LANCE JOINT TV	ANSCHL. REDUZIERSTUTZEN FÜR GELENKROHR TV	RACC. RÉDUCTION POUR ARTIC. BUSE TV	RAC. ADAPTADOR PARA ARTICU-LACIÓN LANZA TV
134	10402350	LANCIA CAPPUCINATORE SON SNODO TV	CAPPUCCINO MAKER LANCE WITH JOINT TV	ROHR MILCHAUFSCHÄUMER MIT GELENK TV	BUSE À CAPPUCCINO AVEC ARTIC. TV	LANZA EMULSIONADOR CON ARTICULACIÓN TV
135	10805872	VITE TC+ M4X6 ZN	SCREW TC+ M4X6 ZN	SCHRAUBE TC+M4X6 ZN	VIS TC+ M4X6 ZN	TORNILLO TC+ M4x6 ZN
136	10505085	OR 3162 130 SIL 40,95X2,62X46,19	OR 3162 130 SIL 40,95X2,62X46,19	OR 3162 130 SIL 40,95X2,62X46,19	OR 3162 130 SIL 40,95X2,62X46,19	OR 3162 130 SIL 40,95X2,62X46,19
137	10652058B	VALVOLA SICUREZZA OT57	OT57 SAFETY VALVE	SICHERHEITSVENTIL OT57	SOUPAPE DE SÛRETÉ OT57	VÁLVULA DE SEGURIDAD OT57
138	10022489B	VASCHETTA SCARICO VALVOLA SICUREZZA	SAFETY VALVE DRIP TRAY	ABLAUFSCHALE SICHERHEITSVEN-TIL	BAC ÉGOUTTAGE SOUPAPE DE SÉCURITÉ	CUBA VACIADO VÁLVULA DE SEGURIDAD
140	10857772	RACCORDO PROLUNGA 1/4"M-3/8"F OT57	OT57 1/4"M-3/8"F EXTENSION FITTING	VERLÄNGERUNGSVERSCHRAUBUNG 1/4"M-3/8"F OT57	RACCORD RALLONGE 1/4"M-3/8"F OT57	RACOR EXTENSIÓN 1/4"M-3/8"H OT57
141	10853064A	RACCORDO DRITTO TAPPO	CAP STRAIGHT FITTING	GERADE VERSCHRAUBUNG DECKEL	RACCORD DROIT BOUCHON	RACOR RECTO TAPÓN
142	10402575	GUARNIZIONE FUST.COPER-CHIO TV-TV NBR 1,5	DIE-CUT LID GASKET TV-TV NBR 1.5	DICHTUNG GEHÄUSEDECKEL TV-TV NBR 1,5	JOINT COUVERCLE TV-TV NBR 1,5	JUNTA FUST.TAPADERA TV-TV NBR 1,5
143	10022497B	COPERCHIO VASC. DI SCARI-CO VALVOLA DI SICUREZZA	SAFETY VALVE DRIP TRAY LID	DECKEL ABLAUFSCHALE SI-CHERHEITSVENTIL	COUVERCLE BAC ÉGOUTTAGE SOUPAPE DE SÛRETÉ	TAPADERA CUBA VACIADO VÁLVULA DE SEGURIDAD
144	10905024	TUBO SILICONE NEUTRO D12X18	NEUTRAL SILICONE HOSE D 12X18	SILIKONSCHLAUCH NEUTRAL D12X18	TUBE SILICONE NEUTRE D12X18	TUBO SILICONA NEUTRO D12X18

TREVISO LX

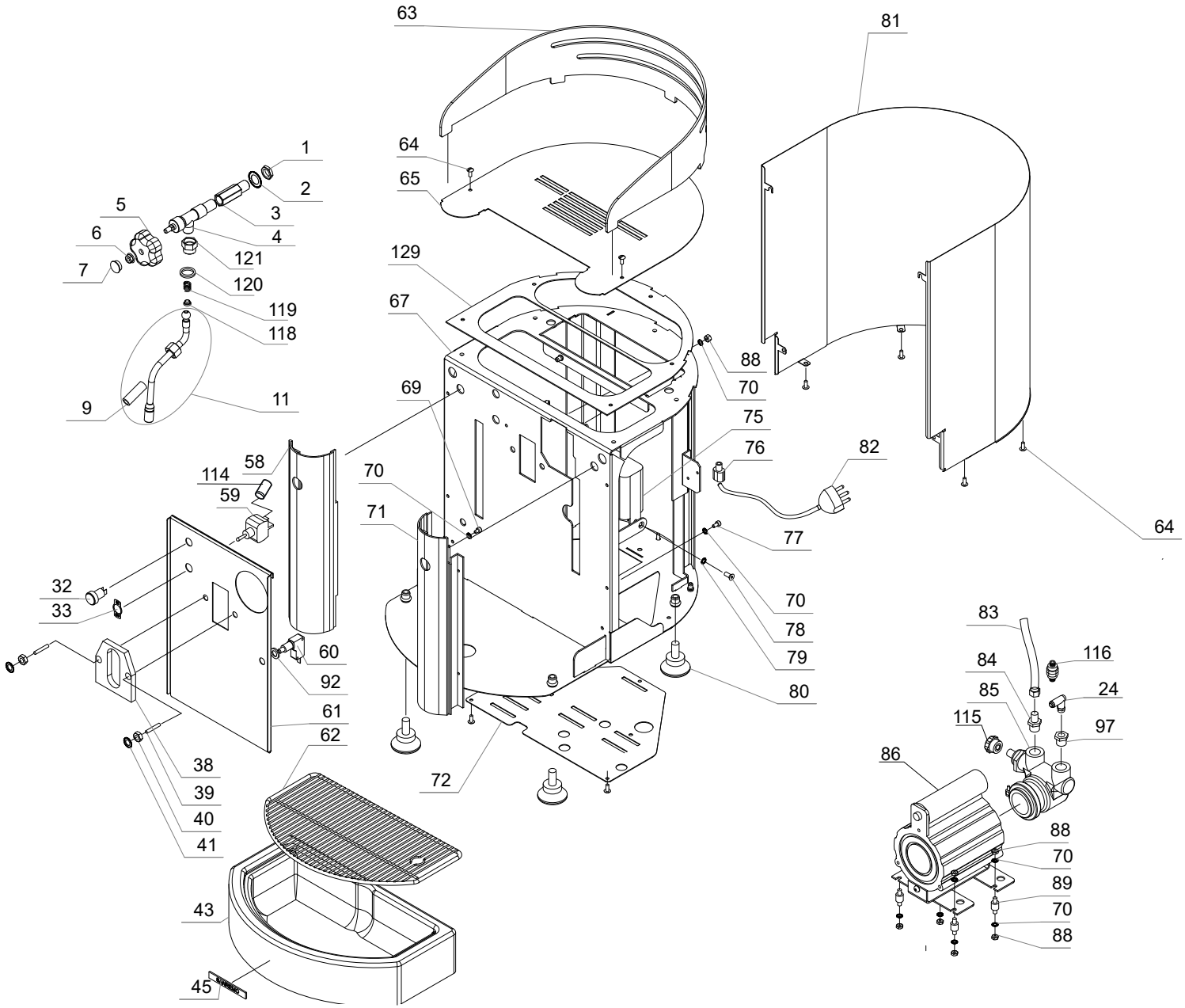
63
81
64
65
1
2
3
4
5
6
7
121
120
119
118
9
11
129
67
88
70
69
75
76
82
64
58
114
59
70
71
77
32
33
70
78
79
80
60
92
61
62
38
39
40
41
72
83
116
84
85
24
115
97
86
88
70
89
70
88
43
45

TREVISO LX

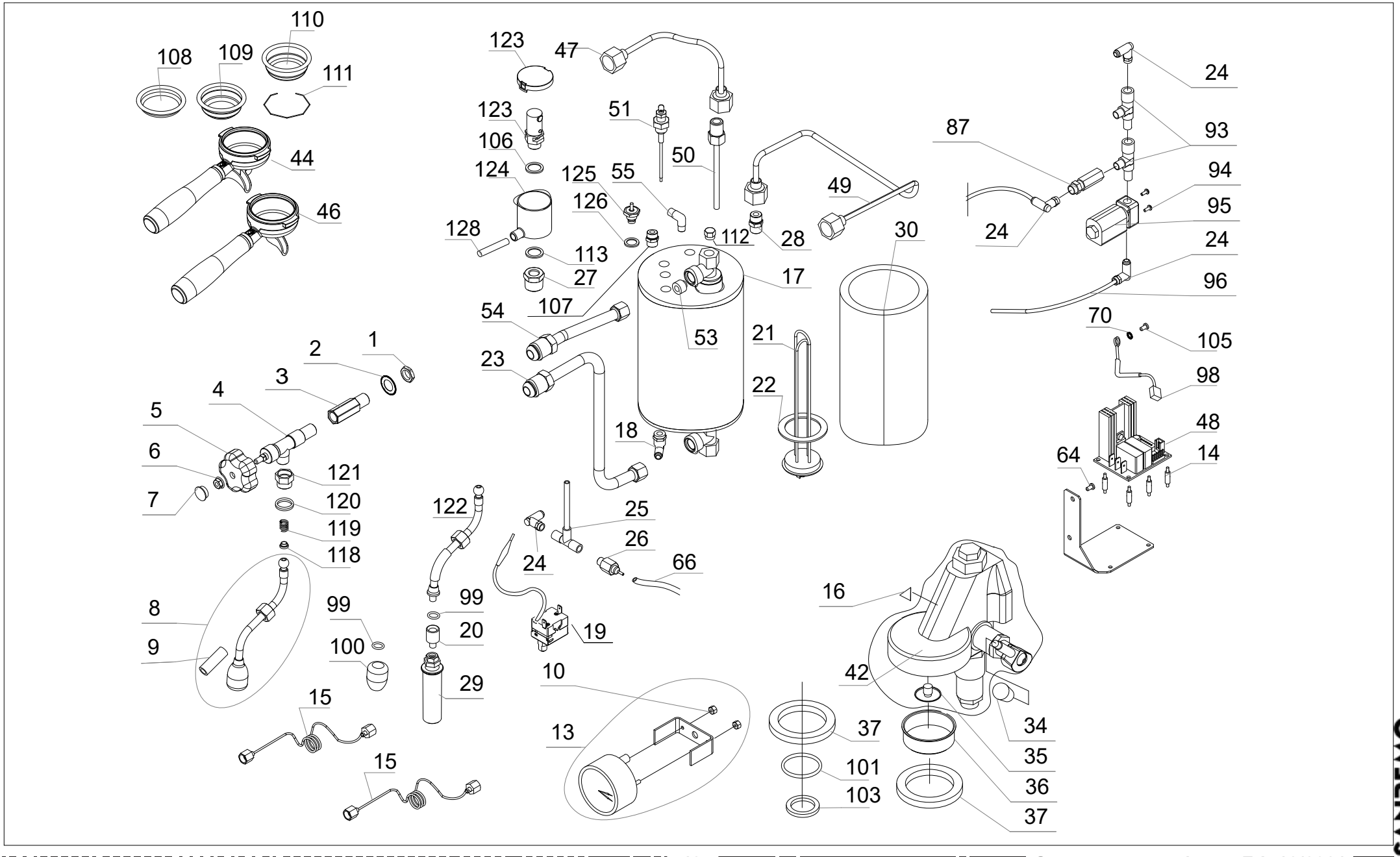
110
108
109
111
44
46
123
47
123
106
124
128
51
50
125
55
126
112
28
49
30
113
27
17
107
54
53
21
22
23
18
2
1
3
4
5
6
7
121
120
119
118
122
25
26
24
66
8
9
99
100
99
20
29
19
10
13
15
15
16
42
37
101
103
34
35
36
37
24
87
93
94
95
24
24
96
70
105
98
48
64
14

TREVISO LX

POS.	COD.	DESCRIZIONE	DESCRIPTION	BESCHREIBUNG	DESCRIPTION	DESCRIPCIÓN
1	10853112B	DADO DA 1/4" ESAG.	HEXAGON NUT 1/4“	MUTTER 1/4“ SECHS.	ECROU DE 1/4“ HEXAG.	TUERCA DE 1/4“ HEXAG.
2	10040048	RONDELLA D14,5X24X1 DENT. ZN	SERRATED WASHER D14.5X24X1 ZN	UNTERLEGSCHEIBE D14,5X24X1 GEZAH. VERZINKT	RONDELLE D14,5X24X1 DENT. ZN	ARANDELA D14,5X24X1 DENT. GALV.
3	14852086A	PROLUNGA RUBINETTO L69,5	TAP EXTENSION L69.5	VERLÄNGERUNG HAHN L69,5	RALLONGE ROBINET L69,5	EXTENSIÓN GRIFO L69,5
4	10402113B	RUBINETTO VAPORE OT57	COMPLETE OT57 STEAM TAP	DAMPFHAHN OT57	ROBINET VAPEUR OT57	GRIFO VAPOR OT57
5	10402085	MANOPOLA RUBINETTO	TAP KNOB	DREHKNOPF HAHN	POIGNEE ROBINET	LLAVE DEL GRIFO
6	10809012	DADO 6MA FLANGIATO	FLANGED NUT 6MA	MUTTER 6MA GEFLANSCHT	ECROU 6MA BRIDE	TUERCA 6MA DE BRIDAS
7	10402098	TAPPO SERIGRAFATO MANOPOLA RUBINETTO	WATER TAP KNOB CAP PRINTED	VERSCHLUSS DREHKNOPF (WASSER)HAHN SIEBGEDR.	BOUCHON SÉRIGRAPHIÉ BOUTON ROBINET	TAPÓN SERIGR. MANDO GRIFO
8	10402346A	LANCIA ACQUA CON SNODO COMPLETA	COMPLETE WATER NOZZLE WITH BALL JOINT	WASSERROHR KOMPLETT MIT GELENK	BUSE À EAU ARTIC. COMPLÈTE	LANZA AGUA CON ARTICULACIÓN COMPLETA
9	10753050	GOMMINO ANTISCOTTURA	ANTI-SCALD RUBBER PROTECTION	VERBRENNUNGSSCHUTZGUMMI	CAOUTCHOUC ANTI-BRULURE	GOMA ANTIQUEMADURAS
10	10805531	DADO 5MA ZN	NUT 5MA ZN	MUTTER 5MA VERZINKT	ECROU 5MA ZN	TUERCA 5MA GALV.
11	10402348A	LANCIA VAPORE CON SNODO COMPLETA	COMPLETE STEAM NOZZLE WITH BALL JOINT	DAMPFROHR KOMPLETT MIT GELENK	BUSE VAPEUR ARTIC. COMPLÈTE	LANZA VAPOR CON ARTICULACIÓN COMPLETA
12	10012138	STAFFA FISS.MANOMETRO	PRESSURE GAUGE FIXING BRACKET	BEFESTIGUNGSBÜGEL MANOMETER	SUPPORT FIX. MANOMETRE	ABRAZADERA FIJAC. MANOMETRO
13	10552015A	MANOMETRO DOPPIA SCALA D.60	DOUBLE-SCALE PRESSURE GAUGE D.60	MANOMETER DOPPELSKALA D. 60	MANOMETRE DOUBLE ECHELLE D.60	MANOMETRO DE DOBLE ESCALA D.60
14	10355038	DISTANZIALE CIRCUITO FORI 3,5 L11,2	CIRCUIT SPACER HOLES 3.5 L11.2	ABSTANDHALTER KREISLAUF ÖFFNUNGEN 3,5 L11,2	ENTRETOISE CIRCUIT TOURS 3,5 L11,2	SEPARADOR CIRCUITO AGUJEROS 3,5 L11,2
15	10002018A	TUBO MANOMETRO POMPA	PUMP PRESSURE GAUGE TUBE	ROHR MANOMETER PUMPE	TUBE MANOMETRE POMPE	TUBO DEL MANOMETRO DE LA BOMBA
16	10955013B	ETICHETTA TRIAN.SUPERFICIE CALDA	HOT SURFACE SYMBOL TRI. LABEL	DREICK. AUFKLEBER HEISSE OBERFLÄCHE	ÉTIQUETTE TRIAN. SURFACE CHAUDE	ETIQUETA TRIAN. SUPERFICIE CALIENTE
17	10002634F	CALDAIA D.120 LT.1,8 RACC. SALDATI	BOILER D.120 LT.1.8 WELDED CONNECTORS	KESSEL D.120 LT. 1,8 ANSCHL. VERSCHWEISST	CHAUDIÈRE D.120 LT.1,8 RACC. SOUDÉS	CALDERA D.120 LT. 1,8 RAC. SOLDADOS
18	10853224A	RACCORDO RAP. A L 4X1/4"M GIREVOLE	QUICK-FIT SWIVEL ELBOW 4 X 1/4“ M	L-SCHNELLANSCHLUSS 4X1/4“M DREHBAR	RACCORD RAPIDE EN L 4X1/4“M TOURNANT	UNION RAPIDA EN L 4X1/4“M GIRATORIA
19	10111146	TERMOSTATO 125° CON RIARMO MAN.	THERMOSTAT 125° WITH MAN. RESET	THERMOSTAT 125° MIT MAN. RESET	THERMOSTAT125° À RÉARMEMENT MANUEL	TERMOSTATO 125° DE REARME MAN.
20	10852129	RACC. CAPPUCCINATORE LANCIA TV-TVLX	UNION CAPPUCC. MAKER LANCE TV-TVLX	ANSCHL. MILCHAUFSCHÄUMERROHR TV-TVLX	RACC. BUSE À CAPPUCCINO BUSE TV-TVLX	RAC. EMULSIONADOR LANZA TV-TVLX

TREVISO LX

POS.	COD.	DESCRIZIONE	DESCRIPTION	BESCHREIBUNG	DESCRIPTION	DESCRIPCIÓN
21A	10452126B	RESISTENZA 1500W 230V	1500W 230V HEATER	HEIZELEMENT 1500W 230V	RÉSISTANCE 1500W 230V	RESISTENCIA 1500W 230V
21B	10452026B	RESISTENZA 1500W 120V	1500W 120V HEATER	HEIZELEMENT 1500W 120V	RÉSISTANCE 1500W 120V	RESISTENCIA 1500W 120V
22	10502018	RONDELLA D.52X41X2mm PTFE	WASHER D.52X41X2mm PTFE	UNTERLEGSCHEIBE D.52X41X2 mm PTFE	RONDELLE D.52X41X2mm PTFE	ARANDELA D.52X41X2mm PTFE
23	10002356	TUBO SCAMBIATORE INFERIORE	LOWER EXCHANGER PIPE	SCHLAUCH TAUSCHER UNTEN	TUBE ECHANGEUR INFERIEUR	TUBO CAMBIADOR INFERIOR
24	10853210	RACCORDO RAP. A L 4X1/8" VITON M GIREVOLE	RAP. COUPLING A L 4X1/8" VITON M ROTATING	L-VERBINDUNGSSTÜCK 4X1/8" VITON M DREHBAR	RACCORD RAP. EN L 4X1/8" VITON M TOURNANT	RACOR RÁP. EN L 4X1/8" VITON M GIRATORIO
25	10042019	INIETTORE D.6	INJECTOR D.6	INJEKTOR D. 6	INJECTEUR D.6	INYECTOR D.6
26	10655557C	VALVOLA DI ESPANSIONE OT57	OT57 EXPANSION VALVE	EXPANSIONSVENTIL OT57	DÉTENDEUR OT57	VÁLVULA DE EXPANSIÓN OT57
27	10857092B	RACCORDO PROLUNGA 3/8"M-1/4"F	3/8"M-1/4"F EXTENSION FITTING	VERLÄNGERUNGSVERSCHRAUBUNG 3/8"M-1/4"F	RACCORD RALLONGE 3/8"M-1/4"F	RACOR EXTENSIÓN 3/8"M-1/4"H
28	10855032C	RACCORDO DRITTO 8-1/4"M	STRAIGHT COUPLER 8-1/4“M	GERADER ANSCHLUSS 8-1/4“ AG	RACCORD DROIT 8-1/4“M	UNION RECTA 8-1/4“M
29	10402302	CAPPUCINATORE COMPLETO GOCCIA	CAPPUCCINO MAKER COMPLETE GOCCIA	MILCHAUFSCHÄUMER KOMPLETT GOCCIA	BUSE À CAPPUCCINO COMPLETE GOUTTE	EMULSIONADOR COMPLETO GOCCIA
30	10025510	PANNELLO MELAMINICO TV LX	MELAMINE PANEL TV LX	MELAMINBLENDE TV LX	PANNEEAU MELAMINIQUE TV LX	PANEL MELAMÍNICO TV LX
31	10012148	STAFFA FISS. CENTRALINA TERMOSTECO	TERMOSTECO CONTROL UNIT BRACKET	BEFESTIGUNGSBÜGEL STEUEREINHEIT TERMOSTECO	BRIDE FIX CENTRALE TERMOSTECO	SOPORTE FIJO CENTRALITA TERMOSTECO
32A	10553030	SEGNALATORE LUMINOSO VERDE 120V	GREEN INDICATOR LIGHT 120V	LEUCHTANZEIGE GRÜN 120V	TEMOIN LUMINEUX VERT 120V	INDICADOR LUMINOSO VERDE 120V
32B	10553034	SEGNALATORE LUMINOSO VERDE 230V	GREEN INDICATOR LIGHT 230V	LEUCHTANZEIGE GRÜN 230V	TEMOIN LUMINEUX VERT 230V	INDICADOR LUMINOSO VERDE 230V
33	10553064	TARGHETTA ON-OFF	ON-OFF PLATE	SCHILD ON-OFF	PLAQUE ON-OFF	PLACA ON-OFF
34	10052165	IMPUGNATURA LEVA GRUPPO	FILTER HEAD LEVER GRIP	HEBELGRIFF GRUPPE	POIGNEE LEVIER GROUPE	EMPUÑADURA DE LA PALANCA DEL GRUPO
35	10052141A	DIFFUSORE GRUPPO	DIFFUSER ASSY.	VERTEILER GRUPPE	DIFFUSEUR GROUPE	DIFUSOR GRUPO
36	10052120	DOCCIA A RETE	FILTER HEAD MESH SHOWERHEAD	NETZDUSCHE	DOUCHE A GRILLE	DUCHA-RED
37	10502160	GUARNIZIONE SOTTOCOPPA H 8,5mm	UNDER-CUP GASKET H 8.5mm	UNTERKAPPENDICHTUNG H 8,5mm	GARNITURE DESSOUS DE COUPE H 8,5mm	JUNTA DEL CARTER DEL ACEITE ALT. 8,5mm
38	10502130	GUARNIZIONE BLOCC.GRUPPO LEVA	LEVER ASSEMBLY SEAL	DICHTUNG FESTST. GRUPPE HEBEL	GARNITURE BLOCAGE GROUPE LEVIER	JUNTA BLOQ. GRUPO PALANCA
39	10052134	PRIGIONIERI GRUPPO	ASSEMBLY STUD BOLTS	STIFTSCHRAUBEN GRUPPE	GOUJONS GROUPE	PERNOS PRISIONEROS DEL GRUPO
40	10802500	DADO 8MA MEDIO ZN	MEDIUM-HT. NUT 8MA ZN	MUTTER 8MA MITTEL VERZINKT	ECROU 8MA MOYEN ZN	TUERCA 8MA MEDIANA GALV.

TREVISO LX

POS.	COD.	DESCRIZIONE	DESCRIPTION	BESCHREIBUNG	DESCRIPTION	DESCRIPCIÓN
41	10803521	RONDELLA D.8,2 DENT. ZN	SERRATED WASHER D 8.2 ZN	UNTERLEGSCHEIBE D.8,2 GEZAHNT ZN	RONDELLE D 8,2 DENT. ZN	ARANDELA D.8,2 DENT. ZN
42	10052005C	GRUPPO A LEVA COMPLETO	COMPLETE LEVER ASSY.	HEBELGRUPPE KOMPLETT	GROUPE LEVIER COMPLET	GRUPO DE PALANCA COMPLETO
43	10024098A	VASCHETTA SCARICO	DRIP TRAY	ABLAUFSCHALE	BAC D'ÉGOUTTAGE	CUBA DE VACIADO
44	KPOZO-VR2TZ12A	KIT PORTAFILTRO 2 TAZZE	2-CUP FILTER HOLDER KIT	BAUGRUPPE SIEBTRÄGER 2 TASSEN	KIT PORTE-FILTRE 2 TASSES	KIT PORTAFILTRO 2 TAZAS
45	10955054B	ETICHETTA LOGO SAN REMO	SAN REMO LOGO LABEL	AUFKLEBER LOGO SAN REMO	ÉTIQUETTE LOGO SAN REMO	ETIQUETA LOGOTIPO SAN REMO
46	KPOZO-VR1TZ6A	KIT PORTAFILTRO 1 TAZZA	1-CUP FILTER HOLDER KIT	BAUGRUPPE SIEBTRÄGER 1 TASSE	KIT PORTE-FILTRE 1 TASSES	KIT PORTAFILTRO 1 TAZA
47	10002360	TUBO PRELIEVO ACQUA CALDA	HOT WATER INTAKE HOSE	HEISSWASSERAUSGABEROHR	TUBE EAU CHAUDE	TUBO DEMANDA AGUA CALIENTE
48	10112023	CENTRALINA TERMOSTECO PID. 120-230V	PID THERMOSTAT CONTROL UNIT 120-230V	STEUEREINHEIT TERMOSTECO PID. 120-230V	CENTRALE TERMOSTECO PID 120-230V	CENTRALITA TERMOSTECO PID. 120-230V
49	10002358	TUBO USCITA VAPORE	STEAM OUTLET HOSE	DAMPFAUSGABEROHR	TUBE SORTIE VAPEUR	TUBO SALIDA VAPOR
50	10853069	PESCANTE	FLOAT	SAUGROHR	PLONGEUR	TUBO DE INMERSIÓN
51	10112059C	SONDA LIVELLO 100mm	LEVEL SENSOR 100mm	NIVEAUSENSOR 100mm	SONDE NIVEAU 100mm	SONDA NIVEL 100mm
53	10052153A	GIGLEUR FORO D.3mm OT57	OT57 GIGLEUR D 3mm HOLE	GIGLEUR ÖFFNUNG D.3mm OT57	GICLEUR TROU . 3mm OT57	BOQUILLA ORIFICIO D.3mm OT57
54	10002354	TUBO SCAMBIATORE SUPE-RIORE	TOP EXCHANGER HOSE	OBERES WÄRMETAUSCHERROHR	TUBE ÉCHANGEUR SUPÉRIEUR	TUBO INTERCAMBIADOR SUPE-RIOR
55	10857250A	RACCORDO A L 1020 6-1/4" M	1020 6-1/4" M L FITTING	WINKELVERSCHRAUBUNG 1020-6/1/4" M	RACCORD EN L 1020 6-1/4" M	RACOR EN L 1020 6-1/4" M
58	10022356A	ESTRUSO SINISTRO ANOD. BRILLANTE	POLISHED ANOD. AL. LEFT EXTRU-DED PIECE	FLIESSPRESSTEIL LINKS ELOX. GLÄNZEND	EXTRUDE GAUCHE ANOD. BRIL-LANT	PIEZA EXTRUIDA IZQUIERDA ANOD. BRILLANTE
59	10553060	INTERRUTTORE BIPOLARE A LEVA	TWO-POLE LEVER SWITCH	ZWEIPOLIGER HEBELSCHALTER	NTERRUPTEUR BIPOLAIRE A LEVIER	INTERRUPTOR BIPOLAR DE PALANCA
60	10112052	MICROINTERRUTTORE C/ DADO COMANDO LEVA	CONTROL LEVER MICROSWITCH W/NUT	MIKROSCHALTER MIT MUTTER HE-BELSTEUERUNG	MICRO-INTERRUPTEUR AVEC ECROU COMMANDE LEVIER	MICROINTERRUPTOR C/TUERCA PARA ACCIONAMIENTO PALANCA
61	10024172	PROTEZIONE FRONTALE	PROTECTIVE FRONT PLATE	FRONTSCHUTZ	PROTECTION AVANT	PROTECCION FRONTAL
62	10024180A	GRIGLIA DI SCARICO INOX	STAINLESS STEEL DRAIN PLATE	ABFLUSSGITTER INOX	GRILLE D'ECOULEMENT INOX	REJILLA DE DESCARGA DE ACE-RO INOX.
63	10352045	FERMATAZZE FUME'	SMOKE-GREY CUP GUARD	TASSENHALTER RAUCHGRAU	ARRET TASSES FUME‘	SUJETATAZAS GRIS “FUME‘”
64	10805027	VITE TBL- M4x10 A2	SCREW TRUSS HEAD- M4x10 A2	SCHRAUBE TBL- M4x10 A2	VIS TBL- M4x10 A2	TORNILLO TBL (DE CABEZA CUR-VA ANCHA) - M4x10 A2

TREVISO LX

POS.	COD.	DESCRIZIONE	DESCRIPTION	BESCHREIBUNG	DESCRIPTION	DESCRIPCIÓN
65	10024166A	COPERCHIO SUPERIORE	TOP COVER	OBERER DECKEL	COUVERCLE SUPERIEUR	TAPA SUPERIOR
66	10905010	TUBO SILICONE NEUTRO D.7X4mm	NEUTRAL SILICONE TUBE D.7X4mm	SILIKONSCHLAUCH NEUTRAL D.7X4 mm	TUBE SILICONE NEUTRE D.7X4mm	TUBO DE SILICONA NEUTRO D.7X4mm
67	10024074E	TELAIO CATAFORIZZATO NERO	BLACK CAT. TREATED FRAME	RAHMEN TAUCHLACKIERT SCHWARZ	CHÂSSIS CATAPHOREESE NOIR	BASTIDOR CON CATAFORESIS NEGRO
69	10805060	VITE TCEI M4X6 UNI 5931	SCREW (HEX CH. SOCK.) M4X6 UNI 5931	INBUSSCHRAUBE M4X6 UNI 5931	VIS TCEI M4X6 UNI 5931	TORNILLO TCEI (CABEZA CIL. CON HEXAG. HEMBRA) M4X6 UNI 5931
70	10803519	RONDELLA D4,2 DENT.ZN DIN 6978	SERRATED WASHER D4.2 ZN DIN 6978	UNTERLEGSCHEIBE D4,2 GEZAH. VERZINKT DIN 6978	RONDELLE D4,2 DENT.ZN DIN 6978	ARANDELA D4,2 DENT. GALV. DIN 6978
71	10022354A	ESTRUSO DESTRO ANOD. BRILLANTE	POLISHED ANOD. AL. RIGHT EX-TRUDED PIECE	FLIESSPRESSTEIL RECHTS ELOX. GLÄNZEND	EXTRUDE DROIT ANOD.BRILLANT	PIEZA EXTRUIDA DERECHA ANOD. BRILLANTE
72	10024192C	PIASTRA FONDO VERN .NERA	BLACK ENAMELLED BOTTOM PLATE	BODENPLATTE SCHWARZ LACK.	PLAQUE FOND LAQUEE NOIRE	PLACA DE FONDO PINTADA CO-LOR NEGRO
75A	10112016A	REGOLATORE LIVELLO 120V 100K	LEVEL CONTROL 120V 100K	WASSERSTANDREGLER 120V 100K	RÉGULATEUR NIVEAU 120 V 100 K	REGULADOR NIVEL 120V 100K
75B	10112018A	REGOLATORE LIVELLO 230V 100K	LEVEL CONTROL 230V 100K	WASSERSTANDREGLER 230V 100K	RÉGULATEUR NIVEAU 230 V 100 K	REGULADOR NIVEL 230V 100K
76A	10105010	PASSACAVO CAVO HO5VV-F	GLAND FOR CABLE HO5VV-F	KABELDURCHGANG KABEL HO5VV-F	GUIDE-CABLE HO5VV-F	PASACABLES CABLE HO5VV-F
76B	10105012	PASSACAVO CAVO 3X16AWG	GLAND FOR CABLE 3X16AWG	KABELDURCHGANG KABEL 3X16AWG	GUIDE-CABLE 3X16AWG	PASACABLES CABLE 3X16AWG
77	10805060	VITE TCEI M4X6 A2 UNI 5931	HEX CAP SCREW M4X6 A2 UNI 5931	RUNDKOPF-INNENSE-CHSKANTSCHRAUBE M4X6 A2 UNI 5931	VIS TCEI M4X6 A2 UNI 5931	TORNILLO TCEI M4X6 A2 UNI 5931
78	10805303	VITE TSPEI M5X12 A2 UNI 5933	HEX C/SUNK SCREW M5X12 A2 UNI 5933	SENKKOPF-INNENSE-CHSKANTSCHRAUBE M5X12 A2 UNI 5933	VIS TSPEI M5X12 A2 UNI 5933	TORNILLO TSPEI M5X12 A2 UNI 5933
79	10803520	RONDELLA D.5,3 DENT.ZN	SERRATED WASHER D.5.3 ZN	UNTERLEGSCHEIBE D.5,3 GEZAH. VERZINKT	RONDELLE D.5,3 DENT.ZN	ARANDELA D.5,3 DENT. GALV.
80	10352056	PIEDINO	FOOT	FUSS	PIED	PIE DE APOYO
81	10024160A	CARROZZERIA	HOUSING	GEHÄUSE	CARROSSERIE	CARROCERIA
82A	10102210	CAVO AL.SJT 3AWG16X2MT USA	POWER CABLE SJT 3AWG16X2MT USA	KABEL AL.SJT 3AWG16X2MT USA	CÂBLE AL.SJT 3AWG16X2MT USA	CABLE AL.SJT 3AWG16X2MT USA
82B	10105130	CAVO ALIM.H05VV-F 3X1X2MT SCHUKO	POWER CABLE H05VV-F 3X1X2MT SCHUKO	SPEISEKABEL H05VV-F 3X1X2MT SCHUKO	CÂBLE ALIM.H05VV-F 3X1X2M SCHUKO	CABLE ALIM.H05VV-F 3X1X2MT SCHUKO

TREVISO LX

POS.	COD.	DESCRIZIONE	DESCRIPTION	BESCHREIBUNG	DESCRIPTION	DESCRIPCIÓN
83	10852484C	TUBO TRAZIONE 3/8" L2000 DN6	TRANSFER HOSE 3/8" L2000 DN6	ANTRIEBSSCHLAUCH 3/8" L2000 DN6	TUBE TRACTION 3/8" L2000 DN6	TUBO TRACCIÓN 3/8" L2000 DN6
84	10857290C	RACC.DRITTO 10-3/8"M-M	10-3/8"M-M STRAIGHT FITTING	GERADE VERSCHRAUBUNG 10-3/8"M-M	RACC.DROIT 10-3/8"M-M	RAC. RECTO 10-3/8"M-M
85	10252060D	POMPA ROTATIVA	ROTARY PUMP	ROTATIONSPUMPE	POMPE ROTATIVE	BOMBA ROTATIVA
86A	10252082	MOTORE ELETTRICO 120W 120V	ELECTRIC MOTOR 120W 120V	ELEKTROMOTOR 120 W 120 V	MOTEUR ELECTRIQUE 120W 120V	MOTOR ELECTRICO 120W 120V
86B	10252084	MOTORE ELETTRICO 120W 230V	ELECTRIC MOTOR 120W 230V	ELEKTROMOTOR 120 W 230 V	MOTEUR ELECTRIQUE 120W 230V	MOTOR ELECTRICO 120W 230V
87	10652027A	VALVOLA UNIDIREZIONALE	1-WAY VALVE	RÜCKSCHLAGVENTIL	VANNE UNIDIRECTIONNELLE	VÁLVULA UNIDIRECCIONAL
88	10805512	DADO 4MA MEDIO ZN	MEDIUM-HT. NUT 4MA ZN	MUTTER 4MA MITTEL VERZINKT	ECROU 4MA MOYEN ZN	TUERCA 4MA MEDIANA GALV.
89	10255022	ANTIVIBRANTE POMPA	PUMP VIBRATION ISOLATION MOUNTING	VIBRATIONSDÄMPFER PUMPE	DISP. ANTI-VIBRATION POMPE	DISPOSITIVO ANTIVIBRACIONES BOMBA
92	10355030	DISTANZ. PER MICROINTER-RUTT. COMANDO LEVA	SPACER FOR LEVER CONTROL MICROSWITCH	ABSTANDHALTER FÜR MIKROSCHAL-TER HEBELSTEUERUNG	ENTRETOISE POUR MICRO-INTER-RUPTEUR COMMANDE LEVIER	SEPARADOR PARA MICROIN-TERRUPTOR ACCIONAMIENTO PALANCA
93	10857270	RACCORDO CONICO A T 1/8" M/M/F OT57	OT57 1/8" M/M/F CONICAL T FITTING	T-VERSCHRAUBUNG KEGELFÖRMIG 1/8" M/M/F OT57	RACCORD CONIQUE EN T 1/8" M/M/F OT57	RACOR CÓNICO EN T 1/8" M/M/H OT57
94	10809019	VITE TBEI M3X8 BRUNITE	BROWNED HEX R/HEAD SCREW M3X8	LINSENKOPFSCHRAUBE INNENSE-CHSKANT M3X8 BRÜNIERT	VIS TBEI M3X8 BRUNIES	TORNILLO TBEI M3X8 PUL.
95A	10303010C	ELETTROVALVOLA 2VIE 1/8" 230V	2-WAY SOLENOID VALVE 1/8" 230V	2-WEGE-MAGNETVENTIL 1/8" 230V	ÉLECTROVANNE 2 VOIES 1/8" 230 V	ELECTROVÁLVULA 2VÍAS 1/8" 230V
95B	10303018B	ELETTROVALVOLA 2VIE 1/8" 120V	2-WAY SOLENOID VALVE 1/8" 120V	2-WEGE-MAGNETVENTIL 1/8" 120V	ÉLECTROVANNE 2 VOIES 1/8" 120V	ELECTROVÁLVULA 2VÍAS 1/8" 120V
96	10909020	TUBO D.4X2.5 TEFLON	TEFLON HOSE D 4X2.5	TEFLONSCHLAUCH D.4X2.5	TUBE D.4X2.5 TÉFLON	TUBO D.4X2.5 TEFLON
97	10857521B	RACCORDO RIDUZIONE 3/8"M-1/8"F OT57	3/8"M-1/8"F EXTENSION FITTING	REDUZIERSTÜCK 3/8"M-1/8"F OT57	RACCORD RÉDUCTION 3/8"M-1/8"F OT57	RACOR REDUCCIÓN 3/8"M-1/8"H OT57
98	10112194A	SONDA DI TEMPERATURA 2 VIE	2-WAY TEMPERATURE SENSOR	TEMPERATURFÜHLER 2-LEITER	SONDE DE TEMPÉRATURE 2 VOIES	SONDA DE TEMPERATURA 2 VÍAS
99	10505018	OR EPDM OR6 DOCCIA ACQUA	OR EPDM OR6 BOILER OUTLET	O-RING EPDM OR6 WASSERDUSCHE	OR EPDM OR6 DOUCHETTE EAU	OR EPDM OR6 ROCIADOR AGUA
100	10402140A	DOCCIA EROGAZIONE ACQUA	BOILER OUTLET	WASSERABGABEDUSCHE	DOUCHETTE SORTIE EAU	ROCIADOR SALIDA AGUA
101	10502070A	OR 3187 PER MAZZOCCO D47,2X2,62	OR 3187 FOR MAZZOCCO D 47.2X2.62	O-RING 3187 FÜR "MAZZOCCO" D47 ,2X2,62	OR 3187 POUR MAZZOCCO D 47,2X2,62	OR 3187 PARA JUNTA TÓRICA D47,2X2,62

TREVISO LX

POS.	COD.	DESCRIZIONE	DESCRIPTION	BESCHREIBUNG	DESCRIPTION	DESCRIPCIÓN
103	10502050	GUARNIZIONE TENUTA CAPSULA	CAPSULE SEAL GASKET	DICHTUNG KAPSELABDICHTUNG	JOINT ÉTANCHÉITÉ CAPSULE	JUNTA ESTANQUEIDAD CÁPSULA
105	10805872	VITE TC+ M4X6 ZN	SCREW TC+ M4X6 ZN	SCHRAUBE TC+M4X6 ZN	VIS TC+ M4X6 ZN	TORNILLO TC+ M4x6 ZN
106	10505085	OR 3162 130 SIL 40,95X2,62X46,19	O-RING 3162 130 SIL 40,95X2,62X46,19	OR 3162 130 SIL 40,95X2,62X46,19	OR 3162 130 SIL 40,95X2,62X46,19	OR 3162 130 SIL 40,95X2,62X46,19
107	10857772	RACCORDO PROLUNGA 1/4"M-3/8"F OT57	OT57 1/4"M-3/8"F EXTENSION FITTING	VERLÄNGERUNGSVERSCHRAUBUNG 1/4"M-3/8"F OT57	RACCORD RALLONGE 1/4"M-3/8"F OT57	RACOR EXTENSIÓN 1/4"M-3/8"H OT57
108	10052220A	FILTRO CIECO	BLIND FILTER	BLINDFILTER	FILTRE NON PERCE	FILTRO CIEGO
109	10052074A	FILTRO 2 TAZZE	2-CUP FILTER	2-TASSEN-FILTER	FILTRE 2 TASSES	FILTRO 2 TAZAS
110	10052072	FILTRO 1 TAZZA	1-CUP FILTER	1-TASSEN-FILTER	FILTRE 1 TASSE	FILTRO 1 TAZA
111	10052050	MOLLA FERMA FILTRO 1,2	FILTER RETAINER SPRING 1,2	SIEBHALTEFEDER 1,2	RESSORT ARRÊT FILTRE 1.2	MUELLE SUJETA FILTRO 1,2
112	10857022B	RACCORDO TAPPO 1/8"M OT57 GR.	CAP STRAIGHT FITTING	GERADE VERSCHRAUBUNG DECKEL	RACCORD DROIT BOUCHON	RACOR RECTO TAPÓN
113	10852218	RONDELLA RAME D.16,8XD25XH1,5MM	COPPER WASHER D.16,8XD25XH1,5MM	UNTERLEGSCHEIBE KUPFER D.16,8XD25XH1,5MM	RONDELLE CUIVRE D.16,8XD25XH1,5MM	ARANDELA COBRE D.16,8XD25XH1,5MM
114	10252316	FILTRO DEM 701Y2 0,47UF(X2) CABL.C/FAST	FILTER DEM	FILTER DEM	FILTRE DEM	FILTRO DEM
115	10355150A	FILTRO POMPA A.F/M3/8" OTT.510L	PUMP FILTER	FILTERPUMPE	FILTRE POMPE	FILTRO BOMBA
116	10351134	TAP.LDPE TRAS.PER TUBO TRAZ.3/8"M	INLET PIPE TRANSPARENT STOPPER	INLET PIPE TRANSPARENT STOPPER	INLET PIPE TRANSPARENT STOPPER	INLET PIPE TRANSPARENT STOPPER
118	10402183A	GIUDA MOLLA PER SNODO LANCIA TV	SPRING GUIDE FOR NOZZLE BALL JOINT TV	FEDERFÜHRUNGSSCHIENE FÜR GELENK ROHR TV	GUIDE RESSORT POUR ARTIC. BUSE TV	GUÍA MUELLE PARA ARTICULACIÓN LANZA TV
119	10402182A	MOLLA PER SNODO LANCIA TV	SPRING FOR NOZZLE BALL JOINT TV	FEDER FÜR GELENK ROHR TV	RESSORT POUR ARTIC. BUSE TV	MUELLE PARA ARTICULACIÓN LANZA TV
120	10402185	GUARNIZIONE PTFE SNODO LANCIA TV	GASKET PTFE JOINT LANCE TV	PTFE - DICHTUNG GELENK ROHR TV	JOINT PTFE ARTIC. BUSE TV	JUNTA PTFE ARTICULACIÓN LANZA TV
121	10402180	RACC. RIDUZIONE PER SNODO LANCIA TV	REDUCER UNION FOR LANCE JOINT	ANSCHL. REDUZIERSTUTZEN FÜR GELENKROHR TV	RACC. RÉDUCTION POUR ARTIC. BUSE TV	RAC. ADAPTADOR PARA ARTICULACIÓN LANZA TV
122	10402350	LANCIA CAPPUCINATORE SON SNODO TV	CAPPUCCINO MAKER LANCE WITH JOINT TV	ROHR MILCHAUFSCHÄUMER MIT GELENK TV	BUSE À CAPPUCCINO AVEC ARTIC. TV	LANZA EMULSIONADOR CON ARTICULACIÓN TV
123	10652058B	VALVOLA SICUREZZA OT57	OT57 SAFETY VALVE	SICHERHEITSVENTIL OT57	SOUPAPE DE SÛRETÉ OT57	VÁLVULA DE SEGURIDAD OT57
124	10022489B	VASCHETTA SCARICO VALVOLA SICUREZZA	SAFETY VALVE DRIP TRAY	ABLAUFSCHALE SICHERHEITSVENTIL	BAC ÉGOUTTAGE SOUPAPE DE SÉCURITÉ	CUBA VACIADO VÁLVULA DE SEGURIDAD

TREVISO LX

POS.	COD.	DESCRIZIONE	DESCRIPTION	BESCHREIBUNG	DESCRIPTION	DESCRIPCIÓN
125	10652040A	VALVOLA DI SFIATO CALDAIA	SAFETY VALVE DRIP TRAY LID	ENTLÜFTUNGSVENTIL HEIZKESSEL	PURGEUR CHAUDIÈRE	VÁLVULA DE PURGA CALDERA
126	10852180	RONDELLA RAME 1/4"	COPPER WASHER 1/4"	UNTERLEGSCHEIBE KUPFER 1/4"	RONDELLE CUIVRE 1/4"	ARANDELA COBRE 1/4"
127	10022497B	COPERCHIOVASCHETTADI-SCARICOVALVOLADISICUREZ-ZA	SAFETY VALVE DRIP TRAY LID	DECKEL ABLAUFSCHALE SI-CHERHEITSVENTIL	COUVERCLE BAC ÉGOUTTAGE SOUPAPE DE SÉCURITÉ	TAPADERA CUBA VACIADO VÁLVULA DE SEGURIDAD
128	10905024	TUBO SILICONE D12X18	SILICONE HOSE D 12X18	SILIKONSCHLAUCH D12X18	TUBE SILICONE D12X18	TUBO SILICONA D12X18
129	10402575	GUARNIZIONE FUST.COPER-CHIO TV-TV NBR 1,5	DIE-CUT LID GASKET TV-TV NBR 1.5	DICHTUNG GEHÄUSEDECKEL TV-TV NBR 1,5	JOINT COUVERCLE TV-TV NBR 1,5	JUNTA FUST.TAPADERA TV-TV NBR 1,5

SANREMO coffee machines s.r.l.
Via Bortolan, 52
31050 Vascon di Carbonera (Treviso) ITALY
Tel. +39.0422.498900 - Fax. +39.0422.448935
www.sanremomachines.com - E-mail: info@sanremomachines.com

Cod.830111216A - AGG.12/2021