


**Catalogo ricambi**
***Spare parts catalogue***

# *F18SB*
# *F18SB TALL*

Cod. 83018020 - Agg.12/2021

**SANREMO coffee machines s.r.l.**
Via Bortolan, 52 - 31050 Vascon di Carbonera (Treviso) ITALY
Tel. +39.0422.498900 - Fax. +39.0422.448935
www.sanremomachines.com - E-mail: info@sanremomachines.com

**Ed. 12/2021**

# INDICE - INDEX


| | | |
|---|---|---|
| TAV. / DRAW. 1 | PANNELLI / PANELS | Pag. 4 |
| TAV. / DRAW. 2 | PANNELLI POSTERIORI / REAR PANELS | Pag. 8 |
| TAV. / DRAW. 3 | SCALDATAZZE / CUP WARMER | Pag. 10 |
| TAV. / DRAW. 4 | PORTACOMANDI / CONTROL PANEL | Pag. 12 |
| TAV. / DRAW. 5 | RUBINETTO E LANCIA VAPORE / STEAM TAP AND WAND | Pag. 14 |
| TAV. / DRAW.6 | EROGAZIONE ACQUA / WATER EROGATION | Pag. 18 |
| TAV. / DRAW.7 | CIRCUITO DI SCARICO / INLET - OUTLET CIRCUIT | Pag. 20 |
| TAV. / DRAW.8 | CIRCUITO VAPORE E CARICO ACQUA / STEAM AND WATER LOAD CIRCUIT | Pag. 22 |
| TAV. / DRAW.9 | POMPE / PUMPS | Pag. 24 |
| TAV. / DRAW.10 | DISPLAY / DISPLAY | Pag. 26 |
| TAV. / DRAW.11 | AUTOSTEAMER | Pag. 28 |
| TAV. / DRAW.12 | CALDAIA / BOILER | Pag. 32 |
| TAV. / DRAW.13 | MASSELLO / FILLING BLOCK | Pag. 34 |
| TAV. / DRAW.14 | GRUPPO EROGAZIONE / GROUP HEAD | Pag. 36 |
| TAV. / DRAW.15 | SPORTELLO ELETTRICO SINISTRO / LEFT ELECTRIC PANEL | Pag. 40 |
| TAV. / DRAW.16 | SPORTELLO ELETTRICO DESTRO / RIGHT ELECTRIC PANEL | Pag. 42 |
| TAV. / DRAW.17 | OPTIONAL LED | Pag. 44 |
| TAV. / DRAW.18 | USCITA VAPORE EXTRA / EXTRA STEAM OUT | Pag. 46 |

# PANNELLI / PANELS



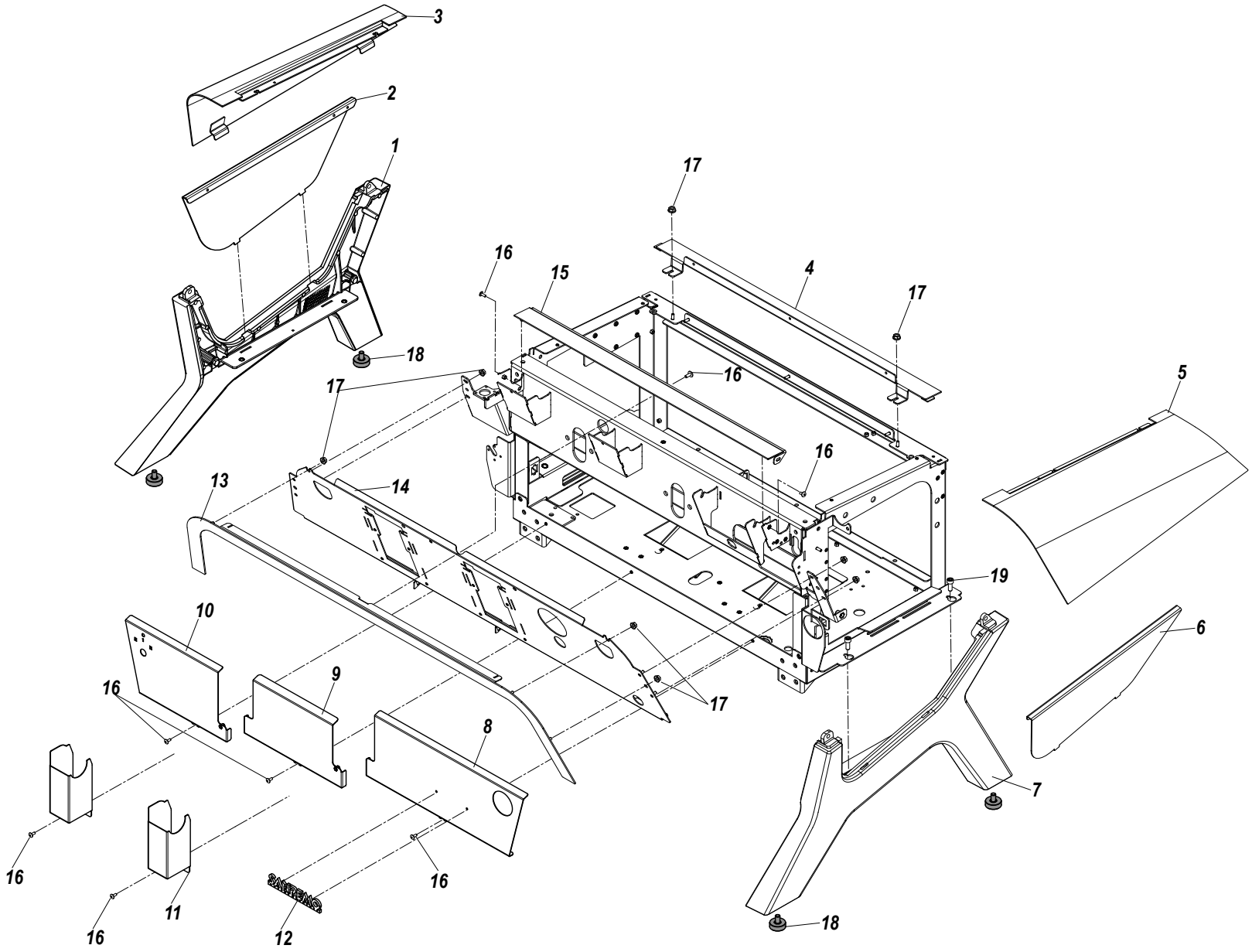

| RIF. POS. | CODICE *CODE* | DESCRIZIONE | DESCRIPTION | NOTE *NOTES* |
|---|---|---|---|---|
| 1 | 10039482A | GAMBA SX F18 AL V.NERO OPACO | MATT BLACK LEFT SUPPORTING LEG | |
| 2 | 10046872B | PANN.INF.SX GAMBA ALF18 NERO LUCIDO | GLOSSY BLACK LEG LOWER PANEL LEFT SIDE | |
| 3A | 10086205D | FIANCO SX CARROZ F18SB2-3 V.BIANCO OPACO | MATT WHITE UPPER LEFT SIDE PANEL | |
| 3B | 10086206D | FIANCO SX CARROZ F18SB2-3 V.ROSSO CORSA LUCIDO | GLOSSY RACING RED UPPER LEFT SIDE PANEL | |
| 3C | 10086208D | FIANCO SX CARROZ F18SB2-3 V.MARRONE RAGGRINZATO | WRINKLED BROWN UPPER LEFT SIDE PANEL | |
| 3D | 10086203D | FIANCO SX CARROZ F18SB2-3 V.N.OPAC | MATT BLACK LEG LOWER PANEL LEFT SIDE | |
| 4A | 10086143 | PROT.SUP.POST. F18SB2GR V.NERO OPACO | MATT BLACK REAR UPPER PROTECTION 2GR | 2GRUPPI / 2GROUPS |
| 4B | 10086145 | PROT.SUP.POST. F18SB2GR V.BIANCO OPACO | MATT WHITE REAR UPPER PROTECTION 2GR | 2GRUPPI / 2GROUPS |
| 4C | 10086146 | PROT.SUP.POST. F18SB2GR V.ROSSO CORSA LUCIDO | GLOSSY RACING RED REAR UPPER PROTECTION 2GR | 2GRUPPI / 2GROUPS |
| 4D | 10086148 | PROT.SUP.POST. F18SB2GR V.MARRONE RAGGRINZATO | WRINKLED BROWN REAR UPPER PROTECTION 2GR | 2GRUPPI / 2GROUPS |
| 4E | 10087143 | PROT.SUP.POST. F18SB3GR V.NERO OPACO | MATT BLACK REAR UPPER PROTECTION 3GR | 3GRUPPI / 3GROUPS |
| 4F | 10087145 | PROT.SUP.POST. F18SB3GR V.BIANCO OPACO | MATT WHITE REAR UPPER PROTECTION 3GR | 3GRUPPI / 3GROUPS |
| 4G | 10087146 | PROT.SUP.POST. F18SB3GR V.ROSSO CORSA LUCIDO | GLOSSY RACING RED REAR UPPER PROTECTION 3GR | 3GRUPPI / 3GROUPS |
| 4H | 10087148 | PROT.SUP.POST. F18SB3GR V.MARRONE RAGGRINZATO | WRINKLED BROWN REAR UPPER PROTECTION 3GR | 3GRUPPI / 3GROUPS |
| 5A | 10086223D | FIANCO DX CARROZ F18SB2-3 V.NERO OPACO | MATT BLACK UPPER RIGHT SIDE PANEL | |
| 5B | 10086225D | FIANCO DX CARROZ F18SB2-3 V.BIANCO OPACO | MATT WHITE UPPER RIGHT SIDE PANEL | |
| 5C | 10086226D | FIANCO DX CARROZ F18SB2-3 V.ROSSO CORSA LUCIDO | GLOSSY RACING RED UPPER RIGHT SIDE PANEL | |
| 5D | 10086228D | FIANCO DX CARROZ F18SB2-3 V.MARRONE RAGGRINZATO | WRINKLED BROWN UPPER RIGHT SIDE PANEL | |
| 6 | 10046852B | PANN.INF.DX GAMBA ALF18 NERO LUCIDO | GLOSSY BLACK LEG LOWER PANEL RIGHT SIDE | |
| 7 | 10039462A | GAMBA DX F18 AL V.NERO OPACO | MATT BLACK RIGHT SUPPORTING LEG | |
| 8A | 10086110C | PROT.FRONT.INF DX F18SB2GR | LOWER RIGHT FRONTAL PROTECTION 2GR | 2GRUPPI / 2GROUPS |
| 8B | 10087110D | PROT.FRONT.INF DX F18SB3GR | LOWER RIGHT FRONTAL PROTECTION 3GR | 3GRUPPI / 3GROUPS |
| 8C | 10086111 | PROT.FRONT.INF DX F18SB2GR TALL | LOWER RIGHT FRONTAL PROTECTION 2GR TALL | 2GRUPPI / 2GROUPS |
| 8D | 10087111A | PROT.FRONT.INF DX F18SB3GR TALL | LOWER RIGHT FRONTAL PROTECTION 3GR TALL | 3GRUPPI / 3GROUPS |
| 9A | 10086108A | PROT.FRONT.INF CENT. F18SB | LOWER CENTRAL FRONTAL PROTECTION | |
| 9B | 10086109 | PROT.FRONT.INF CENT.SB2-3GR TALL | LOWER CENTRAL FRONTAL PROTECTION TALL | |
| 10A | 10086104C | PROT.FRONT.INF SX F18SB2GR | LOWER LEFT FRONTAL PROTECTION 2GR | 2GRUPPI / 2GROUPS |
| 10B | 10087104C | PROT.FRONT.INF SX F18SB3GR | LOWER LEFT FRONTAL PROTECTION 3GR | 3GRUPPI / 3GROUPS |
| 10C | 10086105 | PROT.FRONT.INF SX F18SB2GR TALL | LOWER LEFT FRONTAL PROTECTION 2GR TALL | 2GRUPPI / 2GROUPS |
| 10D | 10087105 | PROT.FRONT.INF SX F18SB3GR TALL | LOWER LEFT FRONTAL PROTECTION 3GR TALL | 3GRUPPI / 3GROUPS |
| 11 | 10086170B | COPRIELETTROVALV F18SB 2-3GR | SOLENOID VALVE COVER F18SB 2-3GR | |
| 12 | 10955214 | ETICHETTA SANREMO ZA.V.NERO OPACO | SANREMO LABEL POLISHED MATT BLACK | |

SEGUE / CONTINUE ---->

# PANNELLI / PANELS



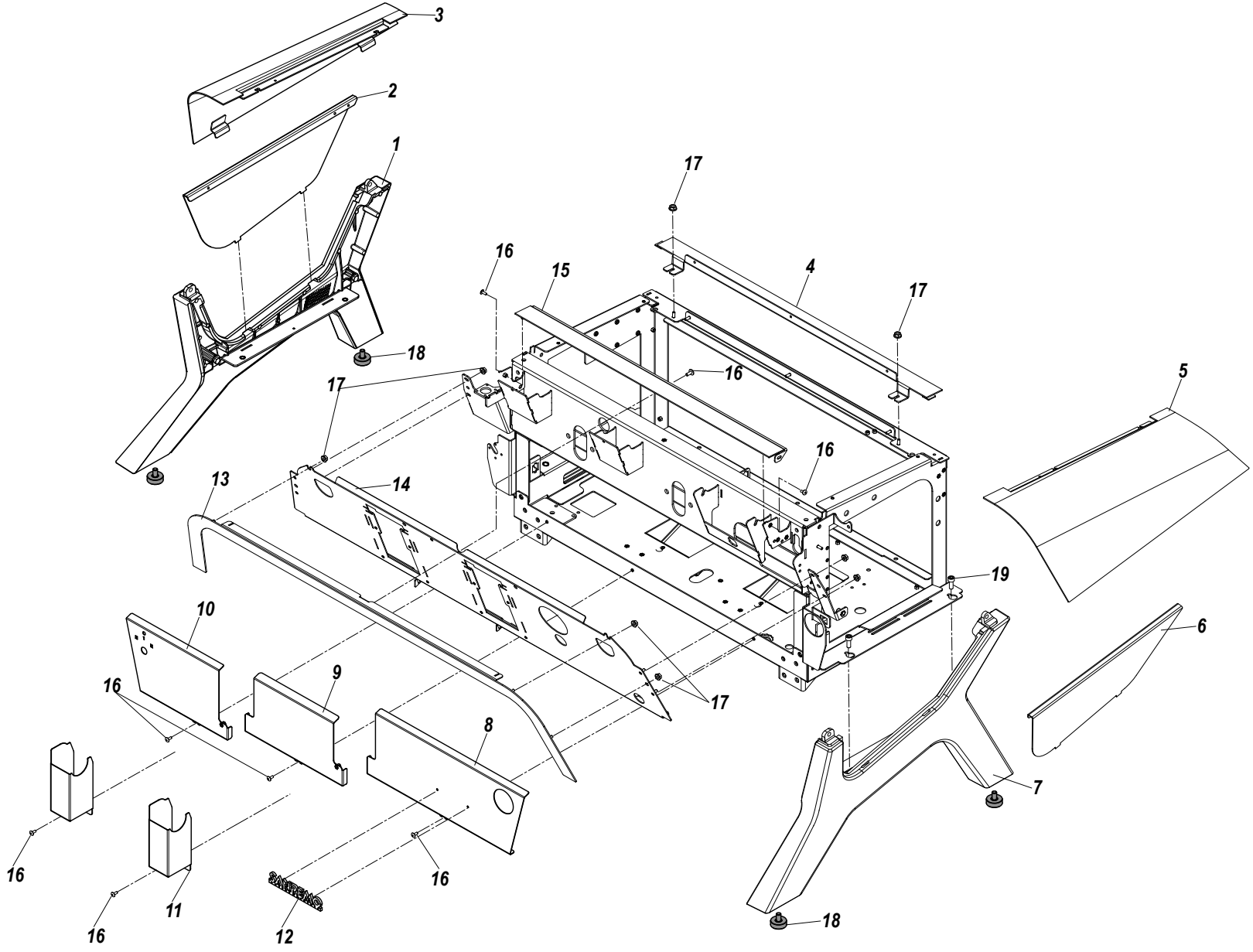

| RIF. POS. | CODICE *CODE* | DESCRIZIONE | DESCRIPTION | NOTE *NOTES* |
|---|---|---|---|---|
| 13A | 10086162A | CORNICE FRONTALE F18SB2GR V.NERO OPACO | MATT BLACK FRONT FRAME 2GR | 2GRUPPI / 2GROUPS |
| 13B | 10087162A | CORNICE FRONTALE F18SB3GR V.NERO OPACO | MATT BLACK FRONT FRAME 3GR | 3GRUPPI / 3GROUPS |
| 14A | 10086305 | PROT.FRONT.SUP.F18SB2GR STD V.NERO OPACO | MATT BLACK UPPER FRONTAL PROTECTION 2GR | 2GRUPPI / 2GROUPS |
| 14B | 10086307 | PROT.FRONT.SUP.F18SB2GR TVC V.NERO OPACO | MATT BLACK UPPER FRONTAL PROTECTION 2GR TVC | 2GRUPPI / 2GROUPS |
| 14C | 10087305 | PROT.FRONT.SUP.F18SB3GR STD V.NERO OPACO | MATT BLACK UPPER FRONTAL PROTECTION 3GR | 3GRUPPI / 3GROUPS |
| 14D | 10087307 | PROT.FRONT.SUP.F18SB3GR TVC V.NERO OPACO | MATT BLACK UPPER FRONTAL PROTECTION 3GR TVC | 3GRUPPI / 3GROUPS |
| 15A | 10086133B | PROT.SUP.ANT. F18SB2GR V.NERO OPACO | MATT BLACK FRONT UPPER PROTECTION 2GR | 2GRUPPI / 2GROUPS |
| 15B | 10086135B | PROT.SUP.ANT. F18SB2GR V.BIANCO OPACO | MATT WHITE FRONT UPPER PROTECTION 2GR | 2GRUPPI / 2GROUPS |
| 15C | 10086136B | PROT.SUP.ANT. F18SB2GR V.ROSSO CORSA LUCIDO | GLOSSY RACING RED FRONT UPPER PROTECTION 2GR | 2GRUPPI / 2GROUPS |
| 15D | 10086138B | PROT.SUP.ANT. F18SB2GR V.MARRONE RAGGRINZATO | WRINKLED BROWN FRONT UPPER PROTECTION 2GR | 2GRUPPI / 2GROUPS |
| 15E | 10087133B | PROT.SUP.ANT. F18SB3GR V.NERO OPACO | MATT BLACK FRONT UPPER PROTECTION 3GR | 3GRUPPI / 3GROUPS |
| 15F | 10087135B | PROT.SUP.ANT. F18SB3GR V.BIANCO OPACO | MATT WHITE FRONT UPPER PROTECTION 3GR | 3GRUPPI / 3GROUPS |
| 15G | 10087136B | PROT.SUP.ANT. F18SB3GR V.ROSSO CORSA LUCIDO | GLOSSY RACING RED FRONT UPPER PROTECTION 3GR | 3GRUPPI / 3GROUPS |
| 15H | 10087138B | PROT.SUP.ANT. F18SB3GR V.MARRONE RAGGRINZATO | WRINKLED BROWN FRONT UPPER PROTECTION 3GR | 3GRUPPI / 3GROUPS |
| 16 | 10805027A | VITE TBL+ M4X10 A2 LUCIDE T/T PH2 | TBL+ M4X10 A2 SCREW | |
| 17 | 10809011 | DADO 4MA FLANG.ZIGR.ZN CL8 | M4 FLANGED NUT | |
| 18 | 10351036 | PIEDINO CR M10XL18+12 H30MM D35 GOMMA | RUBBER FOOT | |
| 19 | 10805078 | VITE TCEI M6X8 A2 UNI 5931 | SCREW TCEI M6X8 | |

# PANNELLI POSTERIORI / REAR PANELS



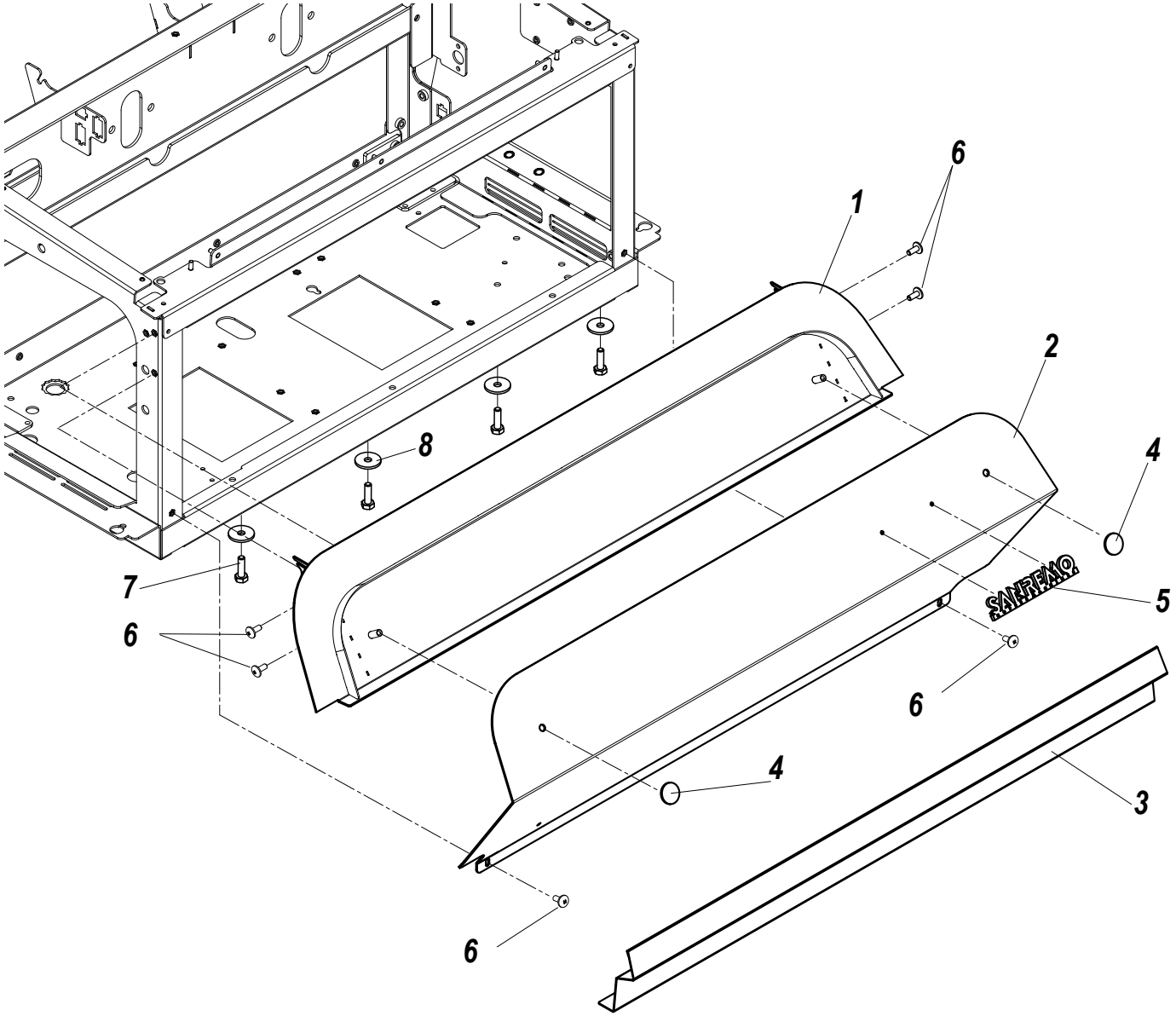

| RIF. POS. | CODICE *CODE* | DESCRIZIONE | DESCRIPTION | NOTE *NOTES* |
|---|---|---|---|---|
| 1A | 10086122A | PROT.POSTERIORE F18SB2GR V.NERO OPACO | MATT BLACK REAR PROTECTION 2GR | 2GRUPPI / 2GROUPS |
| 1B | 10087122A | PROT.POSTERIORE F18SB3GR V.NERO OPACO | MATT BLACK REAR PROTECTION 3GR | 3GRUPPI / 3GROUPS |
| 2A | 10086183B | PANNELLO POST.SUP.F18SB2GR V.NERO OPACO | MATT BLACK UPPER REAR PANEL 2GR | 2GRUPPI / 2GROUPS |
| 2B | 10086185B | PANNELLO POST.SUP.F18SB2GR V.BIANCO OPACO | MATT WHITE UPPER REAR PANEL 2GR | 2GRUPPI / 2GROUPS |
| 2C | 10086186B | PANNELLO POST.SUP.F18SB2GR V.ROSSO CORSA LUCIDO | GLOSSY RACING RED UPPER REAR PANEL 2GR | 2GRUPPI / 2GROUPS |
| 2D | 10086188B | PANNELLO POST.SUP.F18SB2GR V.MARRONE RAGGRINZATO | WRINKLED BROWN UPPER REAR PANEL 2GR | 2GRUPPI / 2GROUPS |
| 2E | 10087183B | PANNELLO POST.SUP.F18SB3GR V.NERO OPACO | MATT BLACK UPPER REAR PANEL 3GR | 3GRUPPI / 3GROUPS |
| 2F | 10087185B | PANNELLO POST.SUP.F18SB3GR V.BIANCO OPACO | MATT WHITE UPPER REAR PANEL 3GR | 3GRUPPI / 3GROUPS |
| 2G | 10087186B | PANNELLO POST.SUP.F18SB3GR V.ROSSO CORSA LUCIDO | GLOSSY RACING RED UPPER REAR PANEL 3GR | 3GRUPPI / 3GROUPS |
| 2H | 10087188B | PANNELLO POST.SUP.F18SB3GR V.MARRONE RAGGRINZATO | WRINKLED BROWN UPPER REAR PANEL 3GR | 3GRUPPI / 3GROUPS |
| 3A | 10086192B | PANNELLO POST.INF.F18SB2GR V.NERO OPACO | MATT BLACK LOWER REAR PANEL 2GR | 2GRUPPI / 2GROUPS |
| 3B | 10087192B | PANNELLO POST.INF.F18SB3GR V.NERO OPACO | MATT BLACK LOWER REAR PANEL 3GR | 3GRUPPI / 3GROUPS |
| 4 | 10402659A | MANOPOLA TCB FISS.PANN.POST.F18 | TCB KNOB REAR PANEL F18 | |
| 5 | 10955212 | ETICHETTA SANREMO ZAMA TR.CROMO LUCIDO | GLOSSY SANREMO PLATE | |
| 6 | 10805027A | VITE TBL+ M4X10 A2 LUCIDE T/T PH2 | TBL+ M4X10 A2 SCREW | |
| 7 | 10805304 | VITE TE M4X16 A2 UNI 5739 | VITE TE M4X16 A2 UNI 5739 | |
| 8 | 10805562 | RONDELLA D4x16x1.5 PIANA ZN | PLANE WASHER D4X16X1,5 | |

# SCALDATAZZE / CUP WARMER



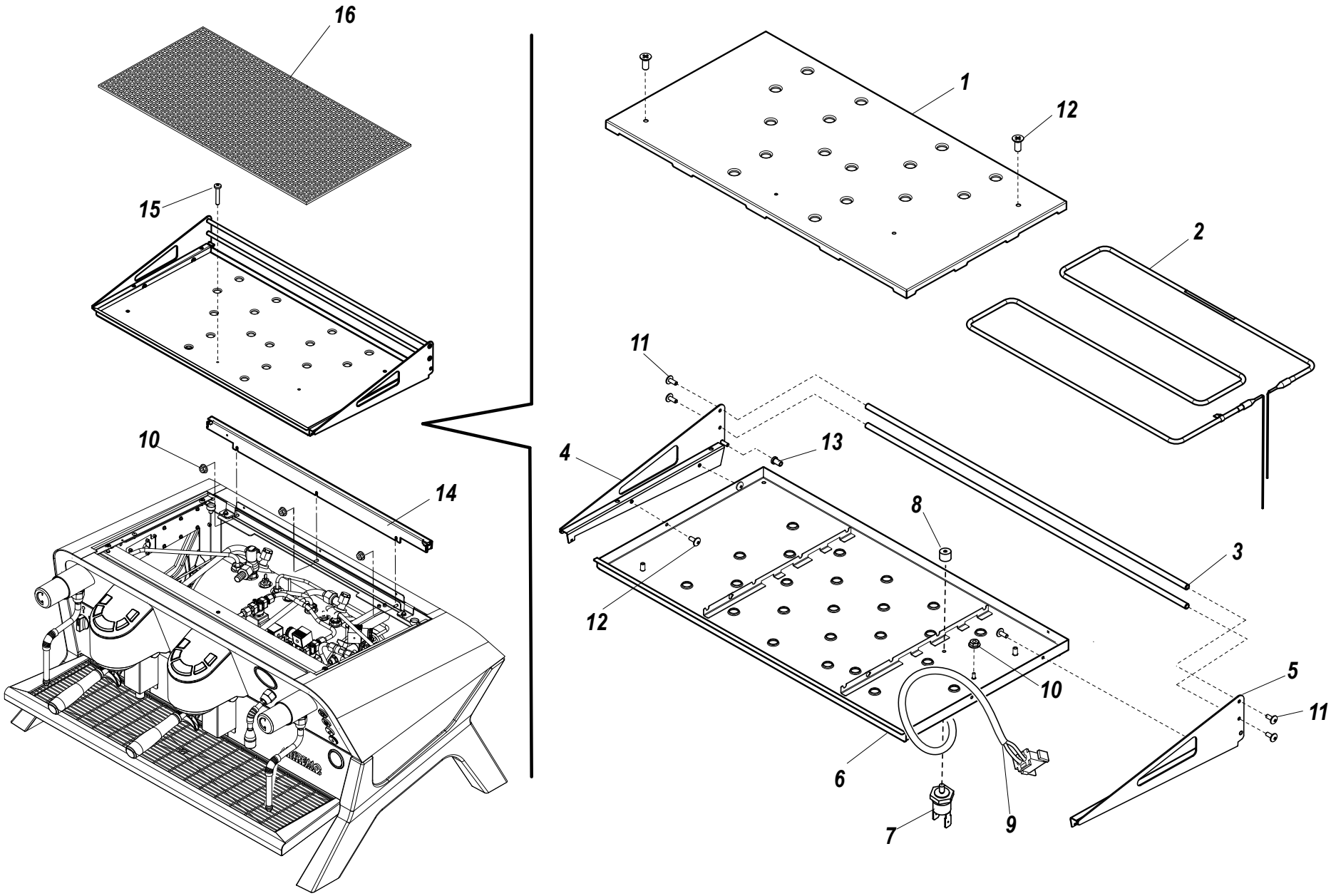

| RIF. POS. | CODICE *CODE* | DESCRIZIONE | DESCRIPTION | NOTE *NOTES* |
|---|---|---|---|---|
| 1A | 10046114D | GRIGLIA SUPERIORE SCALDATAZZE 2GR | CUP WARMER UPPER GRID 2GR | 2GRUPPI / 2GROUPS |
| 1B | 10047114E | GRIGLIA SUPERIORE SCALDATAZZE 3GR | CUP WARMER UPPER GRID 3GR | 3GRUPPI / 3GROUPS |
| 2A | 10455046A | RESISTENZA SCALD.RM-OP 2GR 230V 200W | CUP WARMER HEATING ELEMENT 200W 2GR | 2GRUPPI / 2GROUPS |
| 2B | 10455048A | RESISTENZA SCALD.OP 3GR 230V 250W C.GUA. | CUP WARMER HEATING ELEMENT 250W 3GR | 3GRUPPI / 3GROUPS |
| 3A | 10046118B | FERMATAZZE FILO F18 2GR LUCIDO | REAR CUP STOP 2GR | 2GRUPPI / 2GROUPS |
| 3B | 10047118C | FERMATAZZE FILO F18 3GR LUCIDO | REAR CUP STOP 3GR | 3GRUPPI / 3GROUPS |
| 4 | 10086253 | FERMATAZ LAM SX F18SB2-3GR V.NERO OPACO | MATT BLACK LEFT CUP STOP F18SB2-3GR | |
| 5 | 10086249 | FERMATAZ LAM DX F18SB2-3GR V.NERO OPACO | MATT BLACK RIGHT CUP STOP F18SB2-3GR | |
| 6A | 10086241 | VASCA SCALDATAZZ F18SB2GR | CUP WARMER TANK 2GR | 2GRUPPI / 2GROUPS |
| 6B | 10087241 | VASCA SCALDATAZZ F18SB3GR | CUP WARMER TANK 3GR | 3GRUPPI / 3GROUPS |
| 7 | 10111010 | TERMOST.90° AUTOM.M4 +-3+DIFF.8° | AUTOMATIC THERMOSTAT 90° | |
| 8 | 10114656 | NOTTOLINO FISS.TERMOST.ST F18SB | PLANE WASHER D4X16X1,5 | |
| 9A | 10103160B | CABL.F18SB 2G 220-380 CB | WIRING 2GR F18SB | 2GRUPPI / 2GROUPS |
| 9B | 10103162C | CABL.F18SB 3G 220-380 CB | WIRING 3GR F18SB | 3GRUPPI / 3GROUPS |
| 10 | 10809011 | DADO 4MA FLANG.ZIGR. A2 | M4 FLANGED NUT A2 | |
| 11 | 10805027A | VITE TBL+ M4X10 A2 LUCIDE T/T PH2 | TBL+ M4X10 A2 SCREW | |
| 12 | 10803344 | VITE TSP+ M4X10 ZN UNI 7688 | TSP+ SCREW M4X10 ZN UNI 7688 | |
| 13 | 10114651 | BOCCOLA ANTISTRISC.TORN.ST F18 | ANTI SLIDING BUSHING CUP WARMER F18SB | |
| 14A | 10086244 | PROFILO SCALDATAZ F18SB2GR V.NERO OPACO | CUP WARMER PROFILE 2GR MATT BLACK | 2GRUPPI / 2GROUPS |
| 14B | 10087244 | PROFILO SCALDATAZ F18SB3GR V.NERO OPACO | CUP WARMER PROFILE 3GR MATT BLACK | 3GRUPPI / 3GROUPS |
| 15 | 10805036 | VITE TC+ M4x35 ZN | SCREW TC+M4X35 ZN | |
| 16 | 10402478 | GRIGLIA SCTZ PLAST.NERA F18 | CUP WARMER GRID F18SB | |

# PORTACOMANDI / CONTROL PANEL



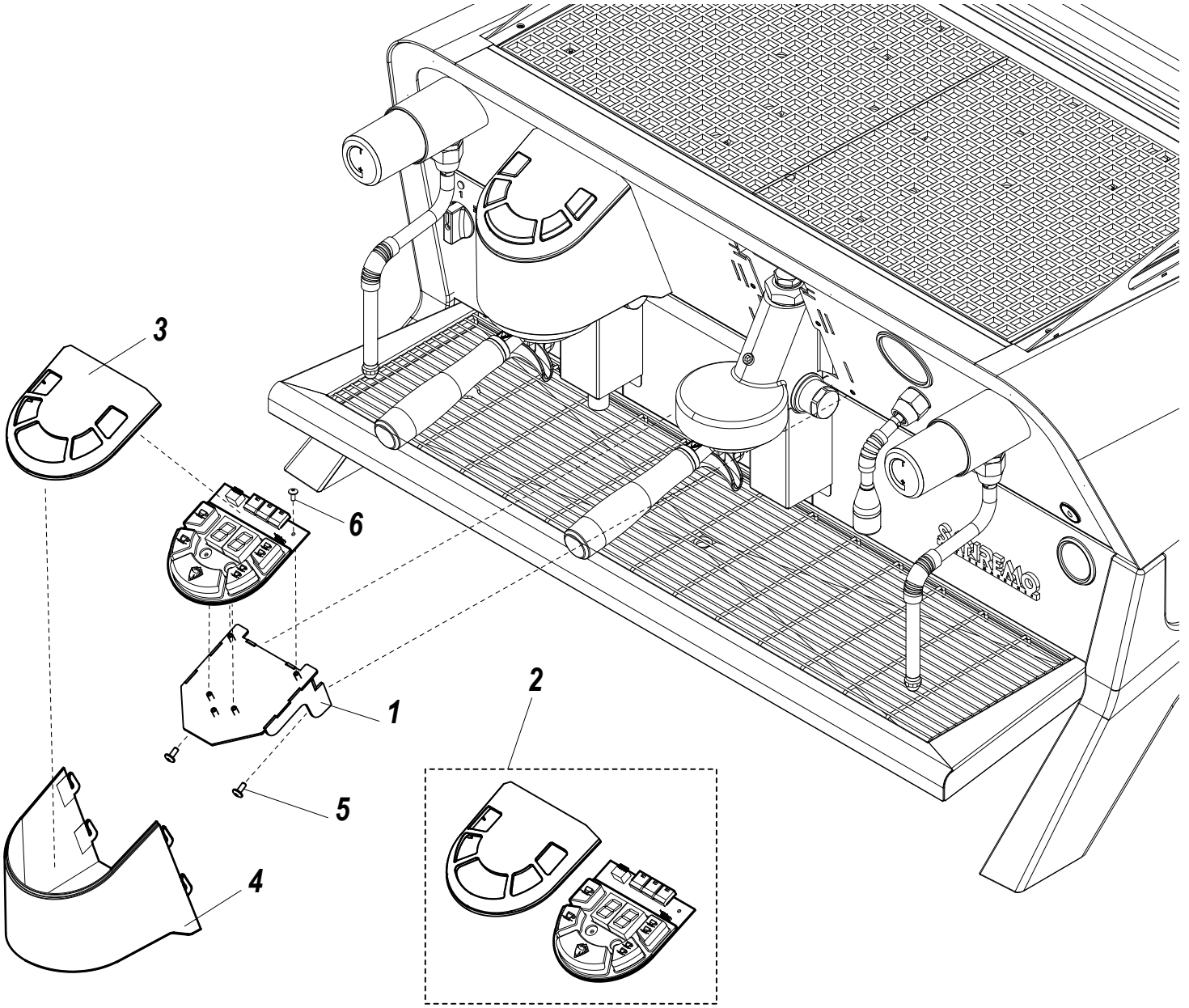

# F18 SB

**TAVOLA** *DRAWING* **4**

## PORTACOMANDI / CONTROL PANEL

2/2

| RIF. POS. | CODICE *CODE* | DESCRIZIONE | DESCRIPTION | NOTE *NOTES* |
|---|---|---|---|---|
| 1 | 10086054C | TELAIO SUPPORTO PULS.F18SB | SUPPORT KEYBOARD FRAME F18SB | |
| 2A | KPULSF18SB5T | PULSANTIERA F18 SB 5TAS.+DIGIT | 5 BUTTONS KEYBOARD KIT F18SB | |
| 2B | KPULSF18SB7T | PULSANTIERA F18 SB 7TAS.+DIGIT | 7 BUTTONS KEYBOARD KIT F18SB | |
| 3 | 10114660C | COVER PULSANTIERA F18SB | KEYBOARD COVER F18SB | |
| 4 | 10114662B | CARTER GRUPPO F18SB | GROUP CARTER F18SB | |
| 5 | 10805027A | VITE TBL+ M4X10 A2 LUCIDE T/T PH2 | TBL+ M4X10 A2 SCREW | |
| 6 | 10805054 | VITE TC+ M3X10 A2 UNI 7687 | SCREW TC+ M3X10 A2 | |

# RUBINETTO E LANCIA VAPORE / STEAM TAP AND WAND



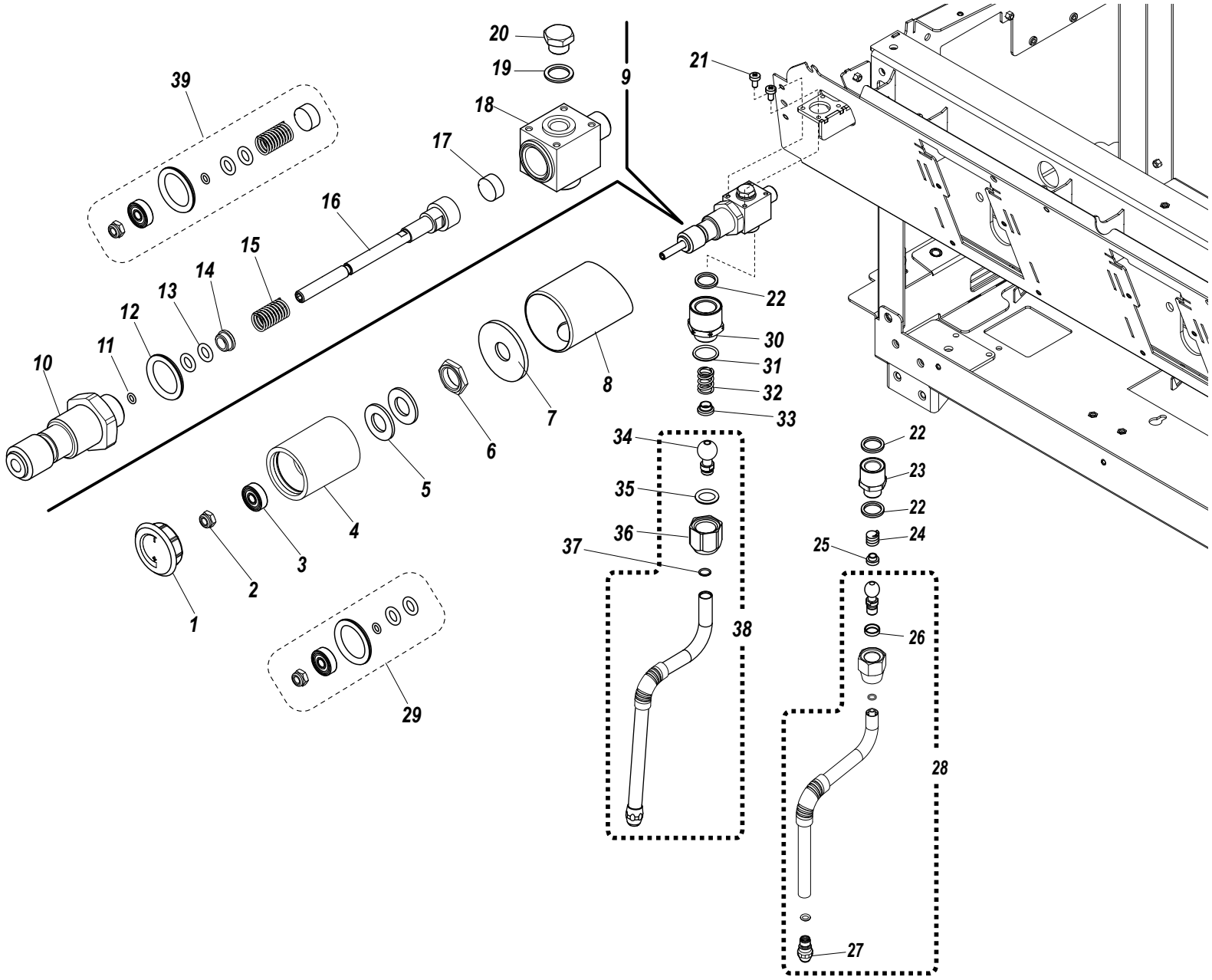

# RUBINETTO E LANCIA VAPORE / STEAM TAP AND WAND



| RIF. POS. | CODICE *CODE* | DESCRIZIONE | DESCRIPTION | NOTE *NOTES* |
|---|---|---|---|---|
| 1 | 10092162B | TAPPO MANOPOLA | KNOB CAP | |
| 2 | 10802516 | DADO M6 AUTOBLOCCANTE CON INSERTI IN METALLO | M6 SELF-BLOCKING NUB WITH METAL INSERT | |
| 3 | 10403018 | CUSCINETTO RUB.VAP.F18 626-2RS1-NAZ | F18 STEAM TAP BEARING 626-2RS1-NAZ | |
| 4 | 10092171 | MANOPOLA VAPORE | STEAM KNOB | |
| 5 | 10803522 | MOLLA A TAZZA G 1/2" | CUP SPRING F 1/2" | |
| 6 | 10402028A | DADO G 1/2" | G 1/2" NUB | |
| 7 | 10086044 | PIASTRA FIX TUBO CAMICIA RUB.VAP. | FIX PLATE SLEEVE TUBE STEAM TAP | |
| 8 | 10403102B | TUBO CAMICIA LANCIA VAPORE | STEAM WAND SLEEVE TUBE | |
| 9 | 10403101A | RUBINETTO G 1/2 | G 1/2" TAP | |
| 10 | 10403024 | SUPPORTO ASTA/MANOPOLA RUBINETTO G 1/2" | SUPPORTING ROD / TAP KNOB G 1/2" | |
| 11 | 10505067 | OR 2010 D.2,57x1,78 NBR | O-RING 2010 DE 2,57x1,78 | |
| 12 | 10852212 | RONDELLA HOV IN RAME G 1/2" | HOV COPPER WASHER G 1/2" | |
| 13 | 10505074 | OR 2025 D6,07X1,78 VITON FDA | O-RING 2025 DE 6,07X1,78 | |
| 14 | 10403008 | GUIDAMOLLA RUBINETTO G 1/2" | TAP SPRING GUIDE G 1/2" | |
| 15 | 10402014 | MOLLA RUBINETTO G 1/2 | TAP SPRING G 1/2" | |
| 16 | 10403016 | ASTA RUBINETTO G 1/2" | TAP ROD G 1/2" | |
| 17 | 10505558 | GUARNIZIONE ASTA RUBINETTO G 1/2" | TAP ROD SEAL G 1/2" | |
| 18 | 10403002B | CORPO CENTRALE RUBINETTO G 1/2" | TAP CENTRAL BODY G 1/2" | |
| 19 | 10853030 | RONDELLA RAME G 1/8" | COPPER WASHER G 1/8" | |
| 20 | 10402881 | TAPPO G1/8" | G1/8" CAP | |
| 21 | 10805069 | VITE TBEI M3X10 A2 | SCREW TBEI M3X10 A2 | |
| 22 | 10402744 | GUARNIZIONE IN PTFE LANCIA VAPORE | STEAM WAND PTFE SEAL | |
| 23 | 10853394B | PROLUNGA LANCIA VAPORE | STEAM WAND EXTENTION | |
| 24 | 10402742 | MOLLA LANCIA VAPORE | STEAM WAND SPRING | |
| 25 | 10402741 | SCODELLINO/GUIDAMOLLA PEEK LANCIA VAPORE | CUP / STEAM WAND PEEK SPRING GUIDE | |
| 26 | 10402736 | GUARNIZIONE SNODO LANCIA VAPORE | STEAM WAND JOING SEAL | |
| 27A | 10402488A | GETTO LANCIA VAPORE 4 FORI D1,5 | STEAM WAND JET 4 HOLES D1,5 | |
| 27B | 10402489A | GETTO LANCIA VAPORE 4 FORI D1,3 | STEAM WAND JET 4 HOLES D1,3 | |
| 28A | 10402730A | LANCIA VAPORE 2-3GR | STEAM WAND 2-3GR | |
| 28B | 10402731A | LANCIA VAPORE F18 TALL COOL TOUCH | TALL VERSION STEAM WAND 2-3GR | VERSIONE TALL / TALL VERSION |
| 29 | KREVRUBF18A | KIT REVISIONE RUB.VAP.F18 02/03/2021 | REVIEW F18 STEAM TAP KIT 02/03/2021 | |
| 30 | 10853395 | PROLUNGA LANCIA VAP.NOCOLDTOUCH F18SB | STEAM WAND EXTENTION NO COLDTOUCH F18SB | |
| | | | | |

# RUBINETTO E LANCIA VAPORE / STEAM TAP AND WAND



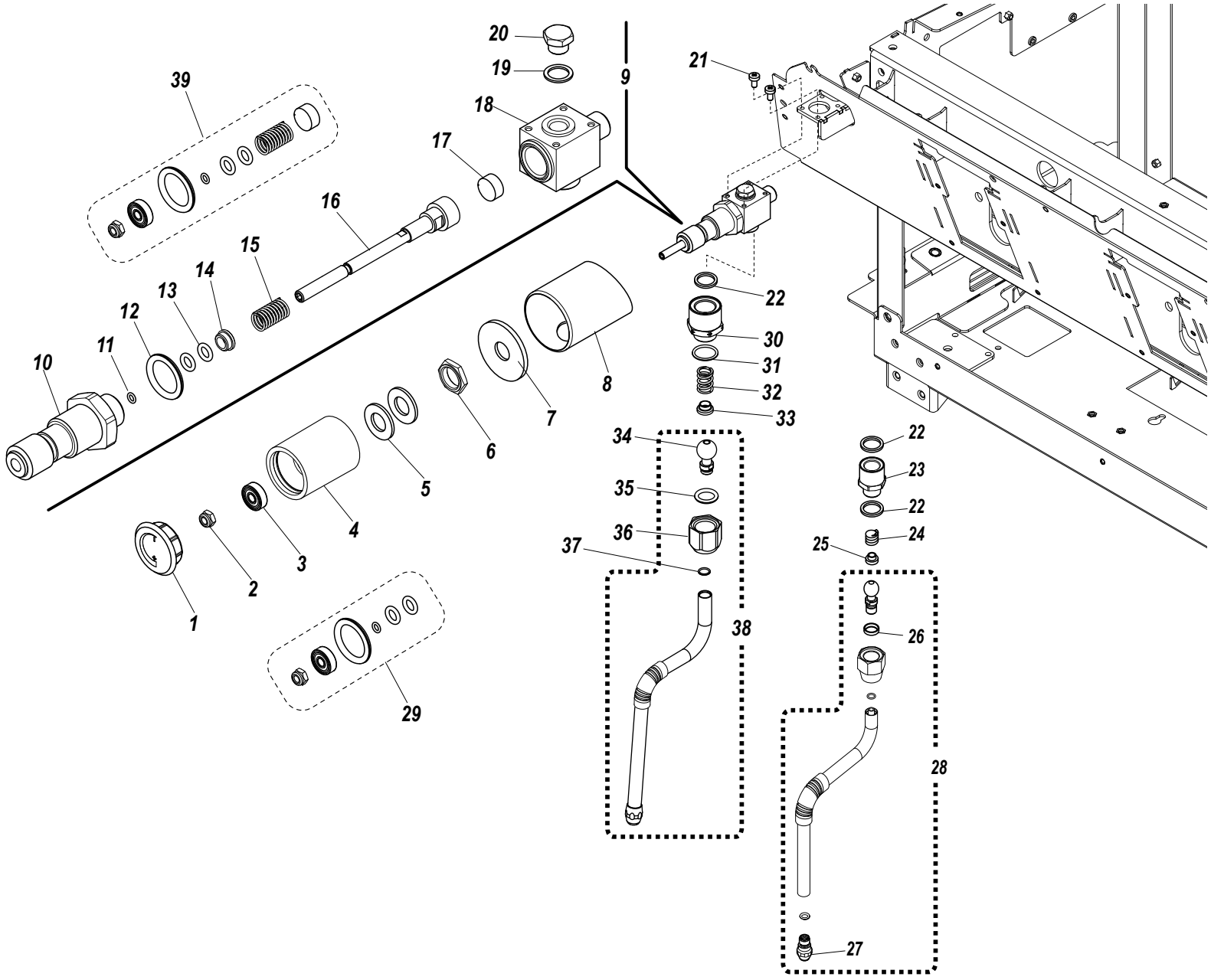

# RUBINETTO E LANCIA VAPORE / STEAM TAP AND WAND



| RIF. POS. | CODICE *CODE* | DESCRIZIONE | DESCRIPTION | NOTE *NOTES* |
|---|---|---|---|---|
| 31 | 10402056A | OR 2062 VITON VERDE D15,6X1,78 | GREEN OR 2062 D 15,6X1,78 | |
| 32 | 10402043 | MOLLA SNODO RUBINETTO | TAP JOINT SPRING | |
| 33 | 10402054A | SCODELLINO SNODO RUBINETTO | TAP JOINT ADJUSTER | |
| 34 | 10402288 | SNODO A SFERA INOX LANCIA VAP.MLX | LANCE BALL SWIVEL JOINT MLX | |
| 35 | 10402082 | OR SNODO LANCIA D10 EPDM 12,1X2,7 | OR NOZZLE JOINT D10 EPDM | |
| 36 | 14402052A | DADO SNODO RUB.OT57 D.22 | WATER TAP JOINT NUT | |
| 37 | 10402081 | OR TUBO LAN.VAPORE OR D.6X1,2 | LANCE TUBE O-RING MLX | |
| 38A | 14402412C | LANCIA VAP.COM.VERDE D.10 OT57+CRNSF | STEAM WAND 2-3GR D10 | |
| 38B | 14402284A | LANCIA VAP.COM.RM-VM-ZO OT57+CRNSF+INOX | COMPLETE STEAM WAND TALL | VERSIONE TALL / TALL VERSION |
| 39 | KUPGRUBF18A | KIT UPGRADE RUB.VAP.F18 02/03/2021 | UPGRADE F18 STEAM TAP KIT 02/03/2021 | |

# EROGAZIONE ACQUA / WATER EROGATION



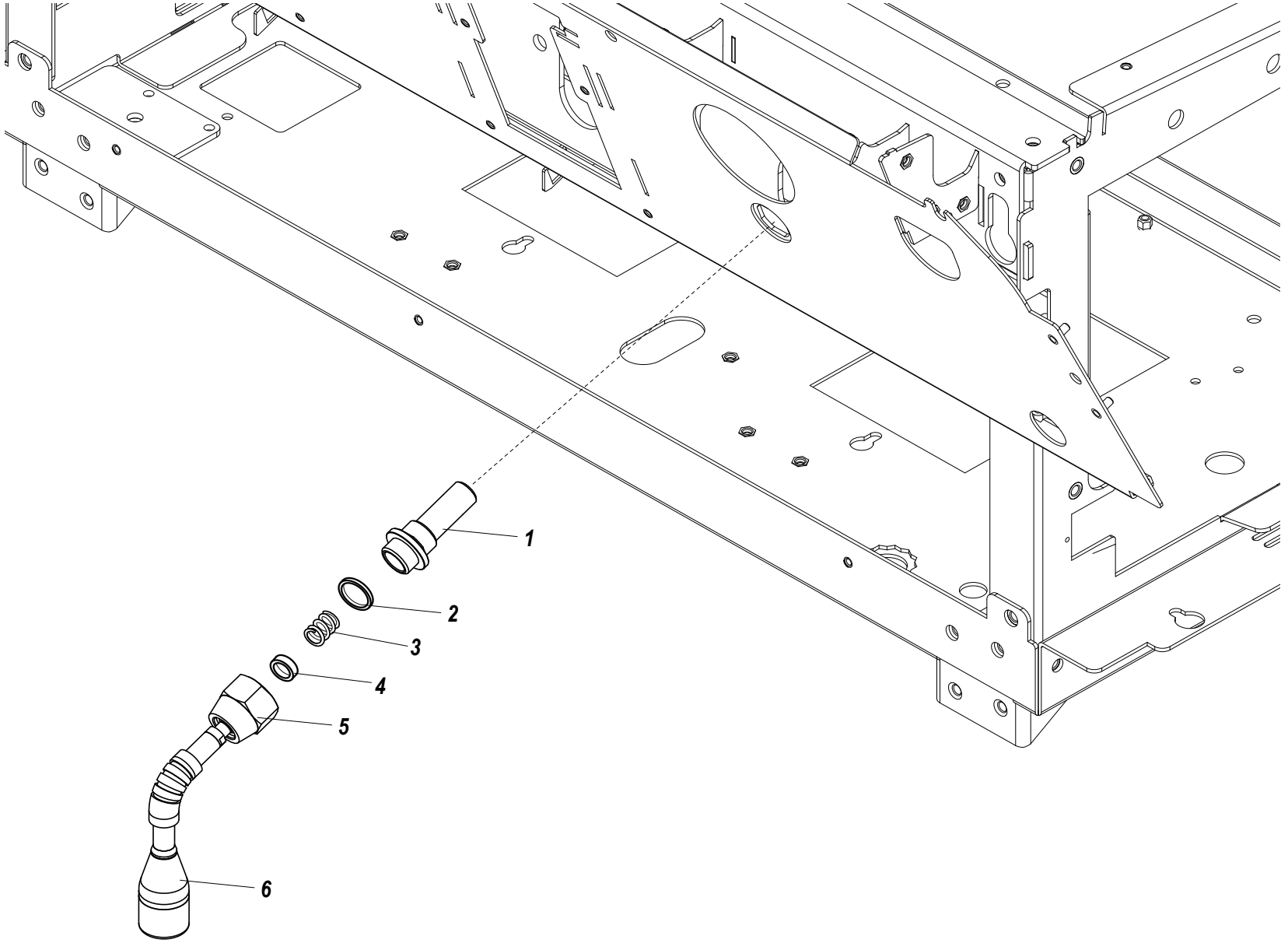

# EROGAZIONE ACQUA / WATER EROGATION



| RIF. POS. | CODICE *CODE* | DESCRIZIONE | DESCRIPTION | NOTE *NOTES* |
|---|---|---|---|---|
| 1 | 10853700B | RACCORDO PROLUNGA EROG.H20 F18SB | EXTENSION FITTING WATER SUPPLY F18SB | |
| 2 | 10402056A | OR 2062 VITON VERDE D15,6X1,78 FDA-NSF | GREEN OR 2062 D 15,6X1,78 | |
| 3 | 10402043 | MOLLA SNODO RUBINETTO | TAP JOINT SPRING | |
| 4 | 10401078B | SCODELLINO SNODO LAN.H20 CR OT57 H.7MM | CUP WATER SHOWER OT57 H7MM | |
| 5 | 10402687 | DADO LANCIA H20 CR A304 | TEA WATER WAND NUT A304 | |
| 6 | 10403100 | LANCIA EROGAZIONE H20 F18 SB | TEA WATER WAND F18SB | |

# CIRCUITO DI SCARICO / INLET - OUTLET CIRCUIT



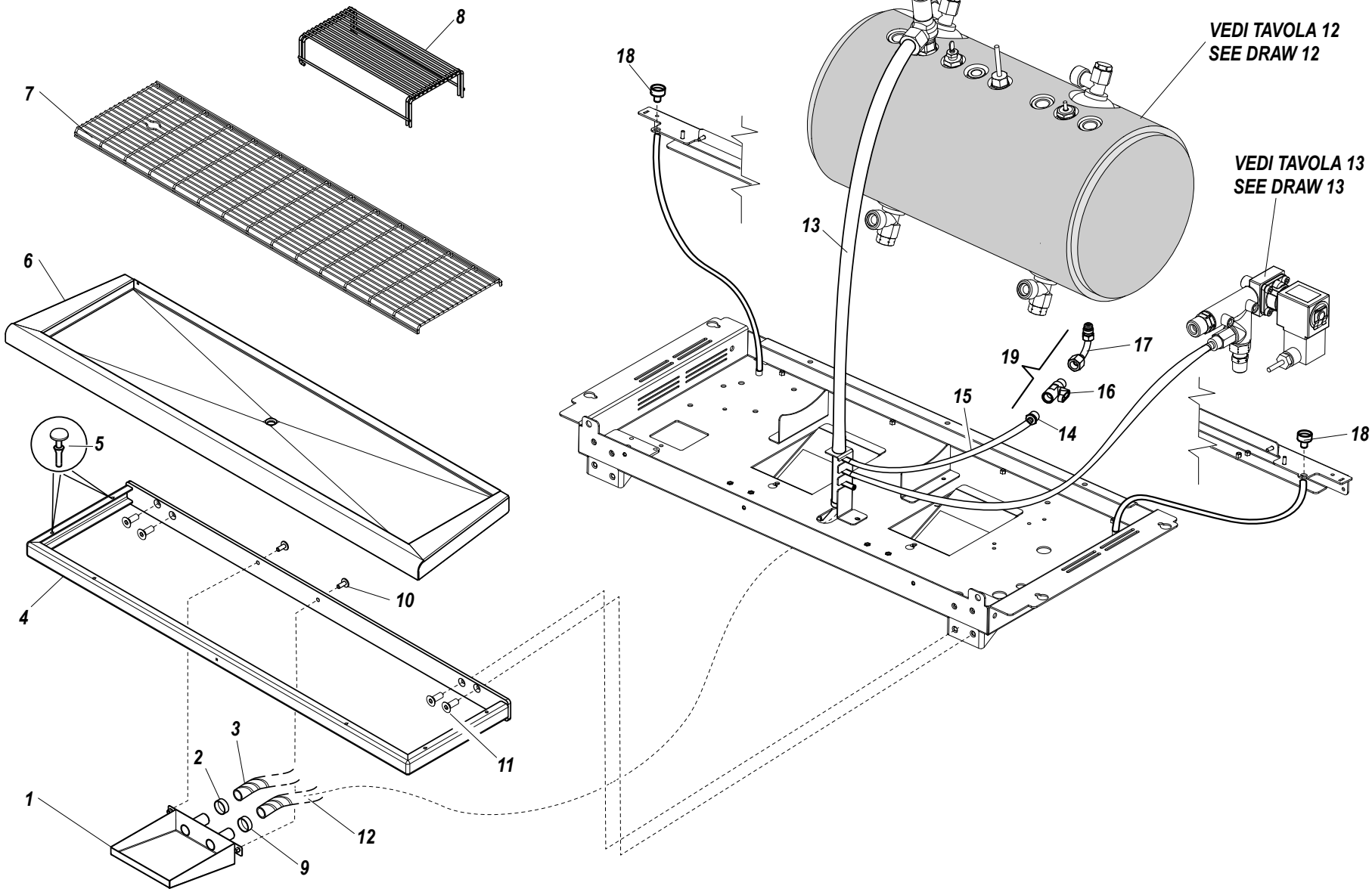

# F18 SB

**TAVOLA** *DRAWING* **7**

## CIRCUITO DI SCARICO / INLET - OUTLET CIRCUIT

2/2

| RIF. POS. | CODICE *CODE* | DESCRIZIONE | DESCRIPTION | NOTE *NOTES* |
|---|---|---|---|---|
| 1 | 10086057 | VASCHETTA DI SCARICO F18 SB | DRAIN TANK F18SB 2-3GR | |
| 2 | 10806099A | FASCETTA D16X27 INOX STRINGITUBO | D16X27 STAINLESS STEEL TUBE CLAMP | |
| 3A | 10852511A | TUBO SPIRALATO D16X22 NERO TALL | HELICALLY WOUND TALL DRAIN PIPE | |
| 3B | 10852513 | TUBO SPIR.ARMO D16X22 NERO 205MM | HELICALLY WOUND DRAIN PIPE L205 D16X22 | |
| 4A | 10086151 | TELAIO SUPPORTO PIATTO DI SCARICO 2GR | CHASSIS SUPPORTING DRAIN PLATE 2GR | 2GRUPPI / 2GROUPS |
| 4B | 10087151 | TELAIO SUPPORTO PIATTO DI SCARICO 3GR | CHASSIS SUPPORTING DRAIN PLATE 3GR | 3GRUPPI / 3GROUPS |
| 5 | 10351052 | PIEDINO PARACOLPI | BUMPER FOOT | |
| 6A | 10046111 | PIATTO DI SCARICO 2GR | DRAIN PLATE 2GR | 2GRUPPI / 2GROUPS |
| 6B | 10047111 | PIATTO DI SCARICO 3GR | DRAIN PLATE 3GR | 3GRUPPI / 3GROUPS |
| 7A | 10086262 | GRIGLIA DI SCARICO FILINOX 2GR F18SB | FILINOX DRAIN GRID F18SB2GR | 2GRUPPI / 2GROUPS |
| 7B | 10087262 | GRIGLIA DI SCARICO FILINOX 3GR F18SB | FILINOX DRAIN GRID F18SB3GR | 3GRUPPI / 3GROUPS |
| 8 | 10026502 | GRIGLIA ESPR.TALL FILINOX F18SB | TALL GRID 2-3GR | |
| 9 | 10806106 | FASCETTA STRINGIT.A 1 ORE.20,2-22,8X7 | 20.2-22.8X7 TUBE CLAMP | |
| 10 | 10805027A | VITE TBL+ M4 x 10 | TBL+ M4 x 10 SCREW | |
| 11 | 10805292 | VITE TSPEI M6 x 16 | TSPEI M6 x 16 SCREW | |
| 12 | 10852466 | TUBO SPIRALATO D16X22 NERO 2MT | SPIRAL WOUND DRAIN PIPE D16X22 2 MT | |
| 13 | 10905024 | TUBO SILICONE D.12 x 18 | SILICON PIPE D. 12 x 18 | |
| 14 | 10851002 | PORTAGOMMA CORTO 1/4" | HOSE HOLDER STRAIGHT FITTING | |
| 15 | 10905010 | TUBO SILIC.TRAS.7X4 70+-5SHORE | TRANSPARENT SILICON TUBE 7X4 | |
| 16 | 10401430A | RUBINETTO SFERA 1/4"M/F CW511L | G 1/4" M/F TAP | |
| 17 | 10006113 | TUBO DI SCARICO INTERNO 2-3GR | INTERNAL DRAIN TUBE 2-3GR | |
| 18 | 10853702A | CONVOGLIATORE SCTZ F18 | CUP WARMER CONVEYOR F18 | |
| 19 | 10041335 | ASSIEME RUBINETTO SCARICO F18SB | DRAIN TAP ASSEMBLY F18SB | |

# CIRCUITO VAPORE E CARICO ACQUA / STEAM AND WATER LOAD CIRCUIT



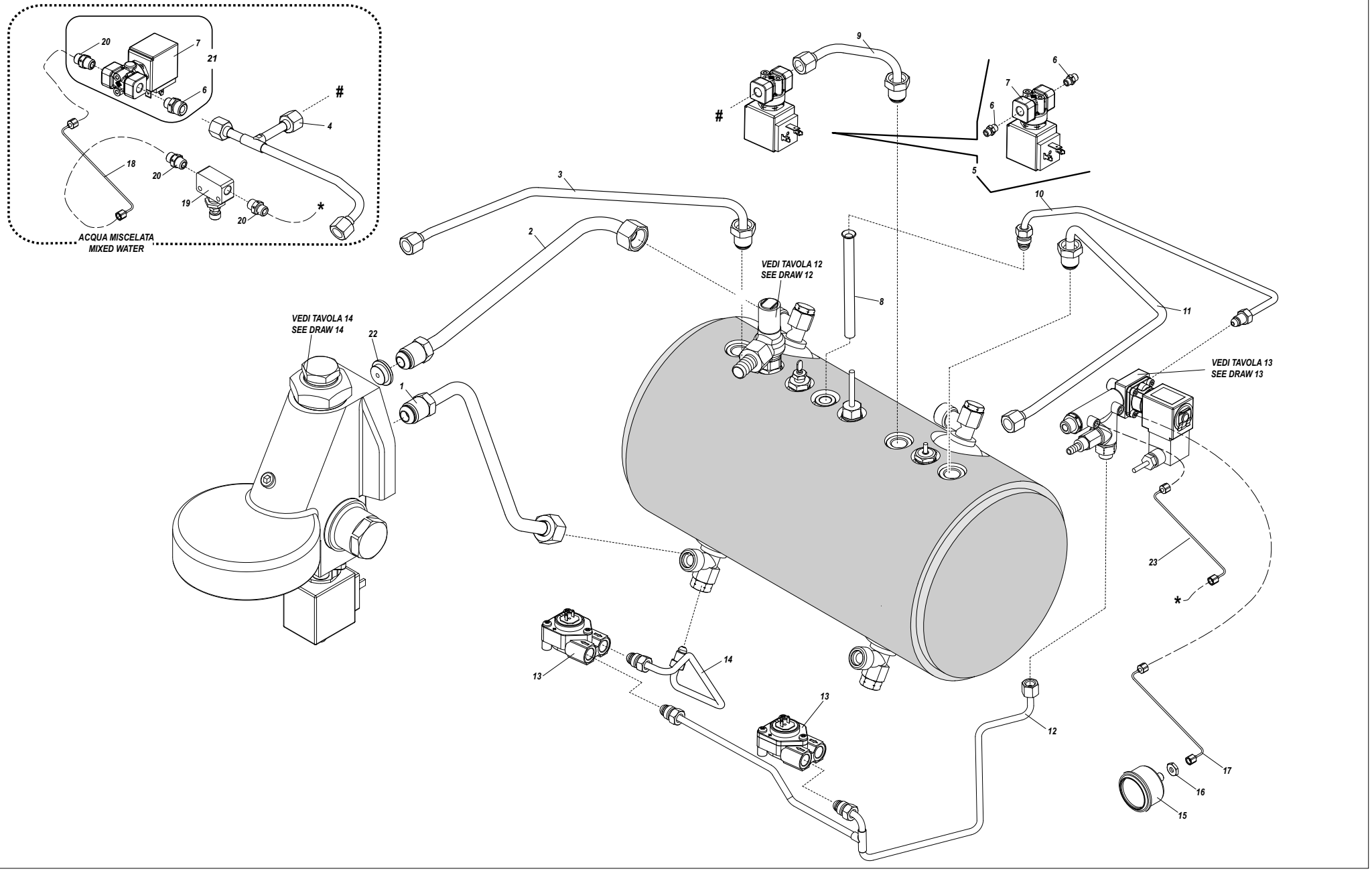

# CIRCUITO VAPORE E CARICO ACQUA / STEAM AND WATER LOAD CIRCUIT



| RIF. POS. | CODICE *CODE* | DESCRIZIONE | DESCRIPTION | NOTE *NOTES* |
|---|---|---|---|---|
| 1 | 10006102B | TUBO SCAMBIATORE INF F18SB 2-3GR | LOWER EXCHANGER PIPE F18SB 2-3GR | |
| 2 | 10006100B | TUBO SCAMBIATORE SUP F18SB 2-3GR | UPPER EXCHANGER F18SB 2-3GR | |
| 3A | 10006104A | TUBO VAPORE SX F18SB 2GR | LEFT STEAM PIPE F18SB 2GR | 2GRUPPI / 2GROUPS |
| 3B | 10006204A | TUBO VAPORE SX F18SB 3GR | LEFT STEAM PIPE F18SB 3GR | 3GRUPPI / 3GROUPS |
| 4 | 10006126B | TUBO USCITA H20 MISC.F18SB | MIXED WATER OUTLET PIPE F18SB | |
| 5 | 10041348 | ASSIEME ELETTROVALVOLA ACQUA CALDA | HOT WATER SOLENOID VALVE ASSEMBLY | |
| 6 | 10857050B | RACCORDO 8-1/8" DRITTO MAS.OT57 | STRAIGHT FITTING 8-1/8 | |
| 7 | 10303169 | ELET.2V.1/8"230V V.0-10B OT57 VDE/UL | 2 WAY SOLENOID VALVE 1/8 230V SIRAI | |
| 8 | 10006128 | TUBO CARTELLATO D.8 1/4 F18SB | FLARED PIPE D8 1/4 F18SB | |
| 9 | 10006108A | TUBO PRELIEVO H20 F18SB | WITHDRAW WATER PIPE F18SB | |
| 10 | 10006114A | TUBO CARICO CALDAIA F18SB | FILL BOILER PIPE F18SB | |
| 11 | 10006106A | TUBO VAPORE DX F18SB | RIGHT STEAM PIPE F18SB | |
| 12A | 10006116B | TUBO CARICO VOLUMETRICO F18SB 2GR | VOLUMETRIC FILL PIPE F18SB 2-3GR 1 | |
| 12B | 10006216A | TUBO CARICO VOLUMETRICO F18SB 3GR | VOLUMETRIC FILL PIPE F18SB 3GR | 3GRUPPI / 3GROUPS |
| 12C | 10006217 | TUBO CAR.VOLUM.DX F18SB 3GR | RIGHT VOLUMETRIC FILL PIPE F18SB 3GR | 3GRUPPI / 3GROUPS |
| 13 | 10112282B | CONTATORE VOL.1/4"+17,1 ATT.OG.OT57 | VOLUMETRIC METER 1/4 | |
| 14 | 10006118C | TUBO USCITA VOLUMETRICO F18SB 2-3GR | VOLUMETRIC OUTLET PIPE F18SB 2-3GR | |
| 15 | 10552042C | MANOMETRO PR.CALD.0-2,5 SR S/STF-DA.OT57 | BOILER PRESSURE GAUGE | |
| 16 | 10805594A | DADO E22 1/8" OT. FISS.MANOMETRO | NUT E22 1/8" | |
| 17 | 10002021A | TUBO CAPILL.COMP.MAN.PR.CALD. | CAPILLARY BOILER TUBE | |
| 18 | 10002028A | TUBO CAPILL.CA-VR MAN.PRES.CALD. | PRESSURE SENSOR-BOILER CAPILLARY TUBE | |
| 19 | 10852324 | REGOLATORE RFO 1/8"FF VIT. | FLOW REGULATOR | |
| 20 | 10857080A | RACCORDO 6-1/8" DRITTO MASC.OT57 | STAIGHT FITTING 6-1/8 | |
| 21 | 10041346 | ASSIEME ELETTROVALVOLA ACQUA FREDDA | COLD WATER SOLENOID VALVE ASSEMBLY | |
| 22A | 13052190 | GIGLEUR F.2 E61 OT57 | GIGLEUR E61 D2 CW510L | |
| 22B | 13052192 | GIGLEUR F.2.5 E61 OT57 | GIGLEUR E61 D2,5 CW510L | |
| 22C | 13052194 | GIGLEUR F.3 E61 OT57 | GIGLEUR E61 D3 CW510L | |
| 23 | 10002026A | TUBO CAPILL.COMP.MAN.PR.CALD.AM OG.OT57 | SENSOR-BOILER CAPILLARY TUBE L820 | |

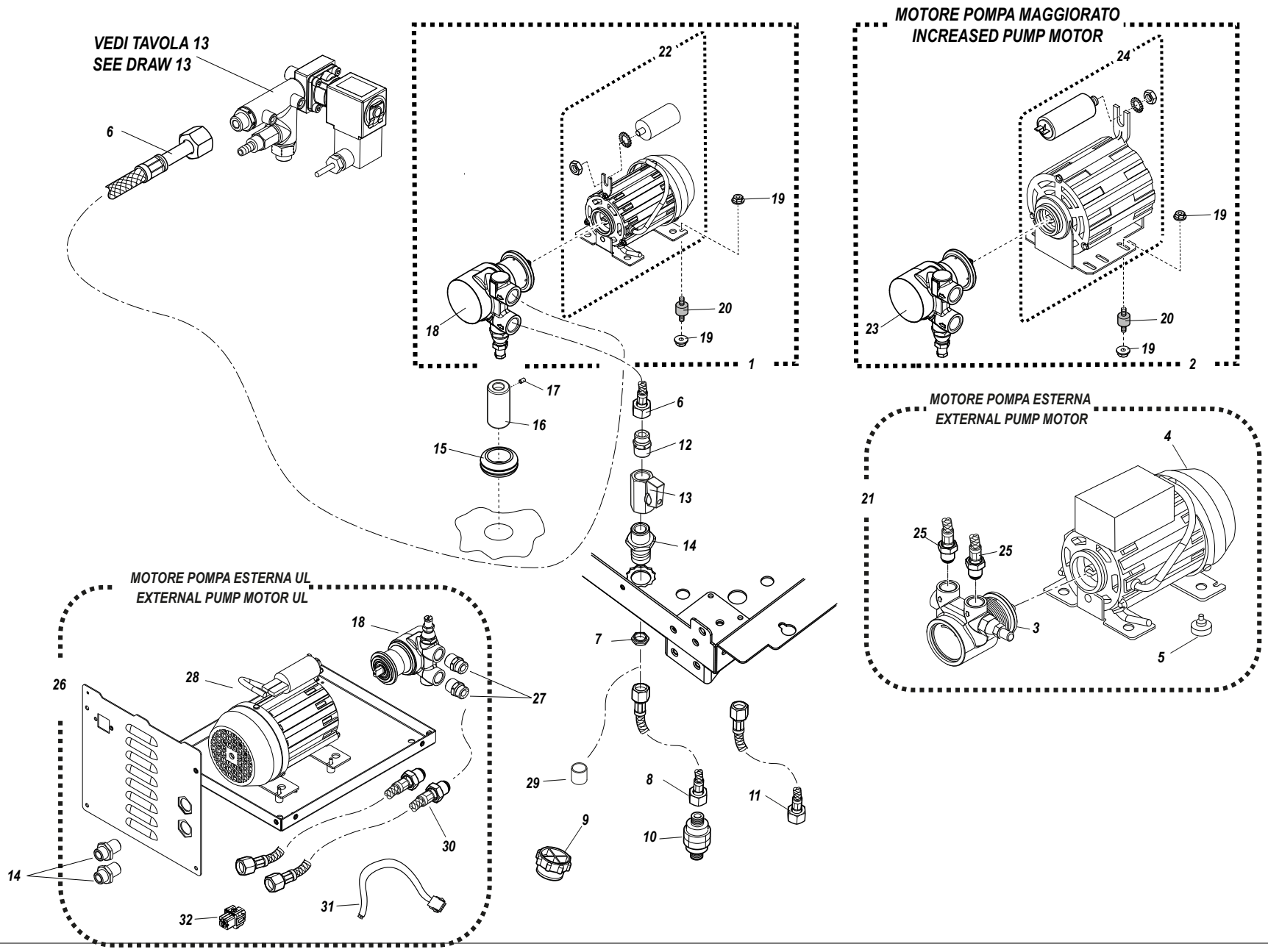
VEDI TAVOLA 13
SEE DRAW 13
6
22
19
20
19
18
1
MOTORE POMPA MAGGIORATO
INCREASED PUMP MOTOR
24
19
20
19
23
2
17
16
15
6
12
13
14
7
MOTORE POMPA ESTERNA
EXTERNAL PUMP MOTOR
4
21
25
25
3
5
MOTORE POMPA ESTERNA UL
EXTERNAL PUMP MOTOR UL
18
28
26
27
30
14
32
31
29
8
11
9
10

# POMPE / PUMPS



| RIF. POS. | CODICE *CODE* | DESCRIZIONE | DESCRIPTION | NOTE *NOTES* |
|---|---|---|---|---|
| 1A | 10041302 | ASS.POMPA INT.F18SB 2-3G | INTERNAL PUMP ASSEMBLY F18SB 2-3GR | |
| 1B | 10041304 | ASS.POMPA INT.F18SB 2G UL | INTERNAL PUMP ASSEMBLY F18SB 2GR UL | UL VERSION |
| 2A | 10041353 | ASS.POMPA INT.F18SB 2-3G MAGGIORATO | INTERNAL BOOST.PUMP ASSEMBLY F18SB 2-3GR | |
| 2B | 10039314 | ASS.POMPA INT.F18SB 2-3G MAGGIORATO UL | INTERNAL BOOST.PUMP ASSEM.F18SB 2-3GR UL | UL VERSION |
| 3 | 10252152 | POMPA COMPACT MB0204 200L/H AT.OG.ECOB. | ROTATIVE PUMP 200L/H | |
| 4 | 10252099 | MOTORE EL.150W 230V VENT.CH.123G CB PE | ELECTRIC MOTOR 150W 230V | |
| 5 | 10352058 | PIEDINO MOD.GOCCIA E POMPA EST.NERO | EXTERNAL PUMP FOOT | |
| 6 | 10852587 | TUBO TRAZ.D1/4F DR.3/8"NIP.CRVA. | WATER LOAD HOSE D1/4F DR.3/8" | |
| 7 | 10805585 | DADO NI E22 Sp4X3/8"XH6Xd18,5 | EXAGONAL NUT 22 4X3/8 XH6XD18,5 | |
| 8 | 10852585 | TUBO TRAZ.3/8FD-3/8F90° L2000 IEC+OT57 | TRACTION TUBE L= 2000 3/8F 3/8F90° | NOT FOR UL VERSION |
| 9 | 10351134 | TAP.LDPE TRAS.PER TUBO TRAZ.3/8"M | CAP 3/8"M FOR TRACTION TUBE | |
| 10 | 10355150A | FILTRO POMPA A.F/M3/8" OTT.510L | PUMP FILTER 3/8"" FITTING | |
| 11 | 10852586 | TUBO TRAZ.L.500 F.3/8+F.3/8 DN6 IEC+OT57 | 3/8"FF L500 TRACTION TUBE | NOT FOR UL VERSION |
| 12 | 10857294 | RACCORDO DRITTO 8-3/8"M OT57 | STRAIGHT FITTING M/M 8 - G 3/8" | |
| 13 | 10401432 | RUBINETTO RE.VAP.3/8"FF CW511L 150° | TAP 3/8"FF CW511L 150° | |
| 14 | 10033792B | RACC.DRITTO ATT.CAR.CR-OP AISI303 ALL. | STRAIGHT LOAD FITTING | |
| 15 | 10112946 | PASSACAVO PER REGOLAZIONE POMP. F18 | PUMP REGOLATION RUBBER PIN | |
| 16 | 10853518 | PERNO REGOLAZ.POMPANTE F18 OT58 | PUMP REGOLATION PIN KNOB | |
| 17 | 10806038 | GRANO M4X4 A2 | GRAIN M4X4 A2 | |
| 18A | 10252150 | POMPA ROT.PA0154 150L NSF 9B 3/8"GAS | ROTARY PUMP 150L 9BAR 3/8GAS | X BPE18SB2UL UL VERSION |
| 18B | 10252072D | POMPA ROT.MOD.PA0204 NSF 9B 3/8"GAS | ROTARY PUMP 200L 9BAR 3GR | X BPE18SB3UL UL VERSION |
| 19 | 10809011 | DADO 4MA FLANG.ZIGR.ZN CL8 | M4 FLANGED NUT | |
| 20 | 10255022 | ANTIVIBR.45SH PUFFER D10X10 M4XH10 | ANTIVIBRATION 45SH D10X10 M4XH10 | |
| 21 | KITPOMPAEST | KIT POMPA ESTERNA F18 2-3GR | EXTERNAL PUMP KIT 2-3GR | |
| 22A | 10252098B | MOTORE EL.130W 230V 4P VEN.1-2 CB | ELECTRIC MOTOR 130W 230V | |
| 22B | 10252092A | MOTORE EL.150W UL MON.SEMIAP.C/CUSC.230V | ELECTRICAL MOTOR 150W | UL VERSION |
| 23 | 10252152 | POMPA COMPACT MB0204 200L/H | ROTARY PUMP 200L/H | |
| 24A | 10252095A | MOTORE EL.150W 230V | ELECTRIC MOTOR 150W 230V | |
| 24B | 10252252 | MOTORE 330W 230V F18 2-3GR UL C.COND | ELECTRIC MOTOR 330W 230V | UL VERSION |
| 25 | 10852594C | TUBO TRAZ.D3/8F D3/8M 2MT | WATER LOAD HOSE L=2mt D3/8F D3/8M | |
| 26A | BPE18SB2UL | BOX POMPA EST.F18SB2 UL-NSF | EXTERNAL PUMP KIT 2GR UL | UL VERSION |
| 26B | BPE18SB3UL | BOX POMPA EST.F18SB3/2MAGG.UL-NSF | EXTERNAL BOOSTED PUMP KIT 2-3GR UL | UL VERSION |
| | | | | SEGUE / CONTINUE ----> |

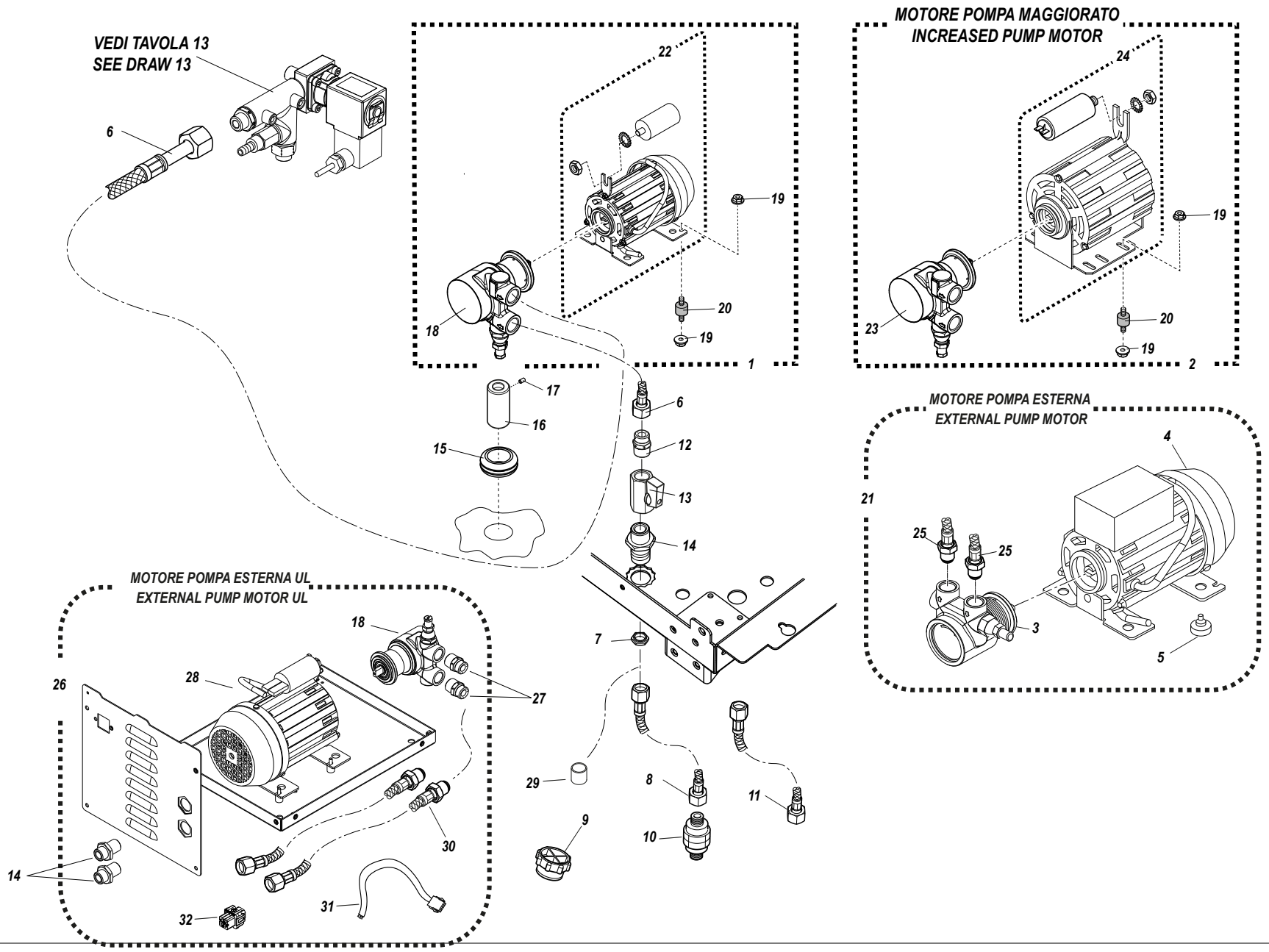
VEDI TAVOLA 13
SEE DRAW 13
6
22
19
20
19
18
1
MOTORE POMPA MAGGIORATO
INCREASED PUMP MOTOR
24
19
20
19
23
2
17
16
15
6
12
13
14
7
MOTORE POMPA ESTERNA
EXTERNAL PUMP MOTOR
4
21
25
25
3
5
MOTORE POMPA ESTERNA UL
EXTERNAL PUMP MOTOR UL
18
26
28
27
30
14
32
31
29
8
9
10
11

# POMPE / PUMPS



| RIF. POS. | CODICE *CODE* | DESCRIZIONE | DESCRIPTION | NOTE *NOTES* |
|---|---|---|---|---|
| 27 | 10857293C | RACCORDO DRITTO 8-3/8"MAS.CON.OT57 | STRAIGHT FITTING 8-3/8" | UL VERSION |
| 28A | 10252252 | MOTORE 330W 230V F18 2-3GR UL C.COND | ELECTRIC MOTOR 330W 230V | UL VERSION |
| 28B | 10252092A | MOTORE EL.150W UL MON.SEMIAP.C/CUSC.230V | ELECTRICAL MOTOR 150W | UL VERSION |
| 29 | 10355102 | TAPPO ALIM.PROD.18XH10MM MACCH.UL | CAP 18XH10MM UL | UL VERSION |
| 30 | 10852502A | TUBO TRAZ.3/8FD-1/4F90° L300 IEC VIR. | TRACTION TUBE 3/8FD-1/4F90° L300 | UL VERSION |
| 31 | 10103028 | CABLAGGIO PER BOX PE OPERA UL-CSA APP. | WIRING FOR EXTERNAL PUMP BOX | UL VERSION |
| 32 | 10057968A | CONNETTORE COVER ILME SP.PE OP UL | COVER CONNECTOR ILME EXT.PUMP UL | UL VERSION |

# DISPLAY / DISPLAY



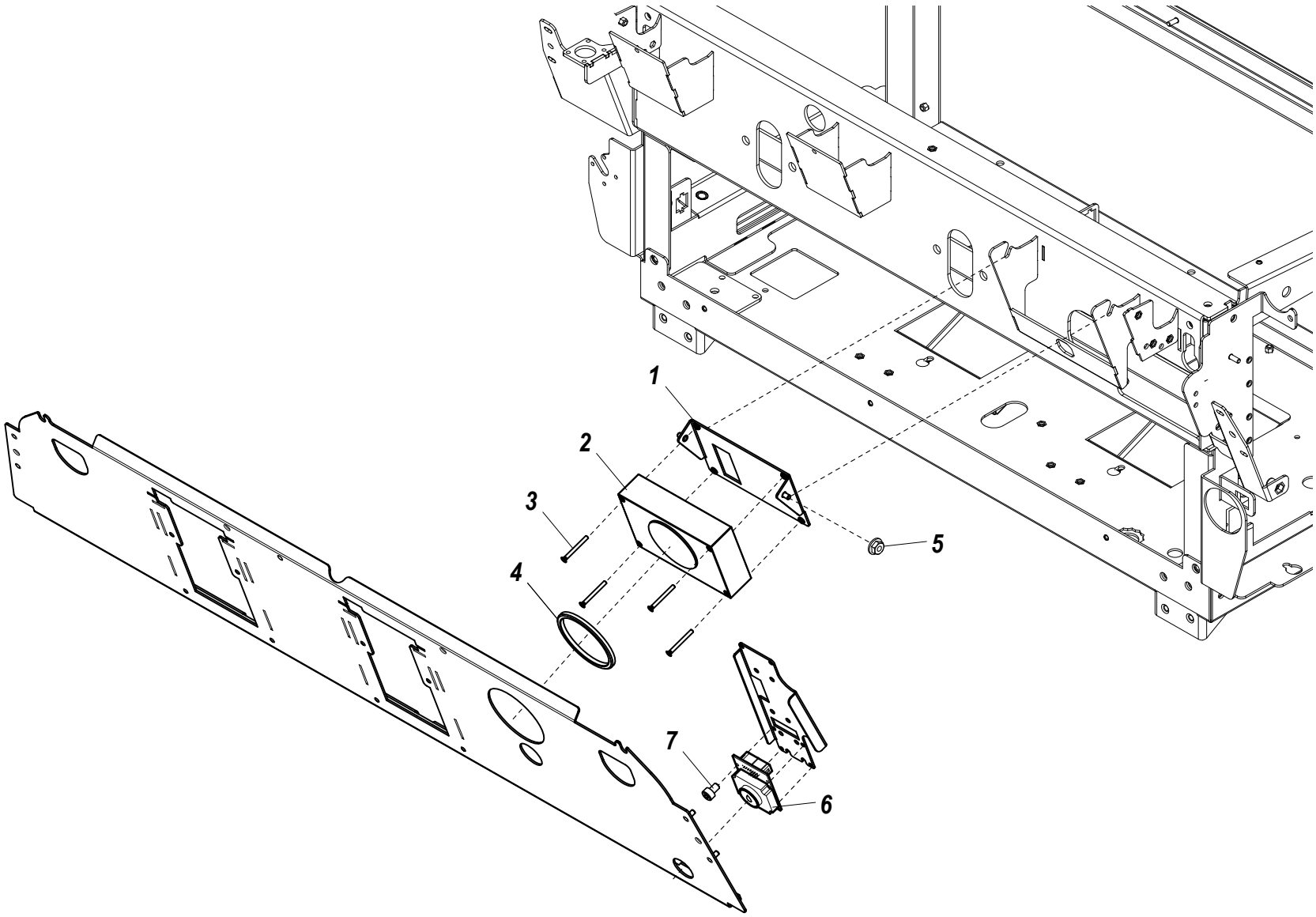

# DISPLAY / DISPLAY



| RIF. POS. | CODICE *CODE* | DESCRIZIONE | DESCRIPTION | NOTE *NOTES* |
|---|---|---|---|---|
| 1 | 10086046B | STAFFA FIX DISPLAY F18SB | FIX DISPLAY BRACKET F18SB AISI430 | |
| 2 | 10114680 | DISPLAY 3,5"TFT COLORI F18SB | DISPLAY 3.5" | |
| 3 | 10803356 | VITE TSP+ M3X30 ISO 7046-1 A2 | TSP+ SCREW M3X30 ISO 7046-1 A2 | |
| 4 | 10853704A | GHIERA DISPLAY F18SB 2-3GR | DISPLAY F18SB RING NUB | |
| 5 | 10809011 | DADO 4MA FLANG.ZIGR.ZN CL8 | M4 FLANGED NUT | |
| 6 | 10114676 | PULSANTIERA 1TAS.D22+LED | 1 BUTTON KEYBOARD D22+LED | |
| 7 | 10805126 | VITE TC+ M3X6 A2 UNI 7687 | TC+ M3 x 6 A2 SCREW | |

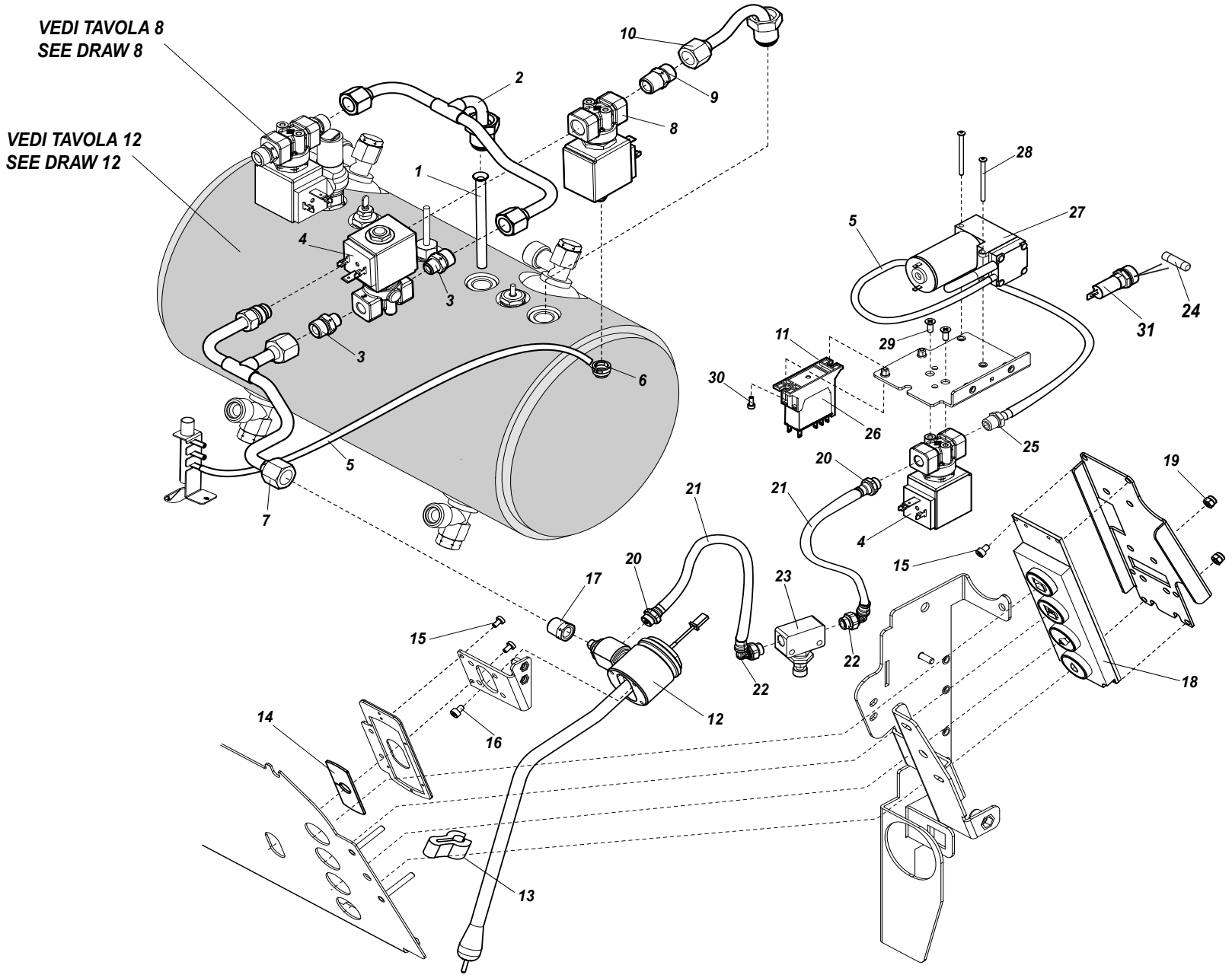
VEDI TAVOLA 8
SEE DRAW 8
VEDI TAVOLA 12
SEE DRAW 12
1
2
3
4
5
6
7
8
9
10
11
12
13
14
15
16
17
18
19
20
21
22
23
24
25
26
27
28
29
30
31

| RIF. POS. | CODICE *CODE* | DESCRIZIONE | DESCRIPTION | NOTE *NOTES* |
|---|---|---|---|---|
| 1 | 10003302 | PESCANTE ZOE KOMP.TUBO CARTEL. D.8 | INLET TUBE D8 | |
| 2 | 10006120B | TUBO PRELIEVO H20 TVC F18SB 2-3GR | WITHDRAW TVC WATER PIPE F18SB 2-3GR | |
| 3 | 10857050B | RACCORDO 8-1/8" DRITTO MAS.OT57 | STRAIGHT FITTING 8-1/8" | |
| 4 | 10303169 | ELETTR.2V.1/8"230V VIT.0-10B OTT. | 2 WAY SOLENOID VALVE 1/8 230V | |
| 5 | 10905010 | TUBO SILIC.TRAS.7X4 MT | TRANSPARENT SILICON TUBE 7X4 | |
| 6 | 10255028A | RACCORDO GOMITO GIR.F1/8 C/PORT. | REVOLVING ELBOW FITTING F 1/8 | |
| 7A | 10006124B | TUBO USC.EV H20/VAP TVC F18SB2GR | OUTLET WATER/STEAM TVC PIPE F18SB 2GR | 2GRUPPI / 2GROUPS |
| 7B | 10006224A | TUBO USC.EV H20/VAP TVC F18SB3GR | OUTLET WATER/STEAM TVC PIPE F18SB 3GR | 3GRUPPI / 3GROUPS |
| 8 | 10302070 | ELETTR.3VIE 1/4X3,2 230V 50HZ VDE/UL | 3 WAY SOLENOID VALVE 1/4X3,2 230V 50HZ | |
| 9 | 10855032C | RACC.DR.M1/4"+M1/4"CON.X8 OT57 | 1/4M-1/4M STRAIGHT FITTING | |
| 10 | 10006122B | TUBO PRELIEVO VAPORE TVC F18SB | WITHDRAW STEAM TVC PIPE F18SB | |
| 11 | 10112634 | ZOCCOLO 046.05 RELE'POT.FIND. | ENHANCED RELAY SOCKET 046.05 | |
| 12A | 10403020 | LANCIA VAP/AR.304 NTC3K3 F18 | TVC STEAM WAND 2-3GR | |
| 12B | 10403021 | LANCIA VAP/AR.304 NTC3K3 F18 TA | TALL TVC STEAM WAND 2-3GR | VERSIONE TALL / TALL VERSION |
| 13 | 10753056 | GOMMINO ANTISC.A PINZA | TVC WAND NO SLIP RUBBER | |
| 14 | 10046330A | TAMPONAMENTO LANCIA TVC F18 2-3GR | PLUGGING PTFE TVC 2-3GR | |
| 15 | 10805126 | VITE TC+ M3X6 A2 UNI 7687 | TC+ M3 x 6 A2 SCREW | |
| 16 | 10805177 | VITE TBL- M4X6 A2 | TBL- M4X6 A2 SCREW | |
| 17 | 10857518 | RACCORDO RID.1/8F-1/4M OT57 C/SM. | REDUCTION CYLINDRICAL FITTING 1/4M-1/8F | |
| 18 | 10114678 | PULSANTIERA 4TAS.D22+LED | 4 BUTTONS KEYBOARD D22+LED | |
| 19 | 10805627 | DADO M4 AUTOBLOCCANTE | SELF-LOCKING M4 NUT | |
| 20 | 10853204A | RACC. RAP.DRITTO 4X1/8M OR VITON OT57 | RAPID STRIGHT FITTING 4X1/8M | |
| 21 | 10909020 | TUBO D4X2.5 TEFLON +-0,05MM FDA-NSF | TEFLON TUBE D4X2, | |
| 22 | 10853210 | RACC.L RAP.4X1/8" OR VIT.GIR.OT57 | L QUICK COUPLING 4X1/8" | |
| 23 | 10852340 | ASSIEME REG.FLUSSO CW510L | FLOW REGULATOR CW510L | |
| 24 | 10111170 | FUSIBILE VET. 0,16AT 5X20 250V VDE-UL | GLASS FUSE 0.16AT 5X20 250V VDE-UL | AUTOSTEAMER ONLY (F2) |
| 25 | 10853068C | RACC.DR.PORTAG.D.7 1/8"M CON.OT57 | RUBBER HOLDER STRAIGHT FITTING 1/8M | |
| 26 | 10112632 | RELE'POT.230VAC CONT.SPDT16A FIND. | RELÈ 230VAC SPDT16A | |
| 27 | 10255087 | COMPRESSORE A PISTONE 8003D DC 24V 7,5W | COMPRESSOR 8003D 24V 7,5W | |
| 28 | 10805152 | VITE TC+ M3X40 A2 UNI 7687 | TC+ M3X40 A2 SCREW | |
| 29 | 10803344 | VITE TSP+ M4X10 A2 UNI 7688 | TSP+ M4 x 10 SCREW | |
| 30 | 10805054 | VITE TC+ M3X10 A2 UNI 7687 | SCREW TC+ M3X10 A2 | |
| 31 | 10111094 | CORPO PORTAFU.5X20MM TER.3/16" | FUSE HOLDER 5X20 | |

# CALDAIA / BOILER



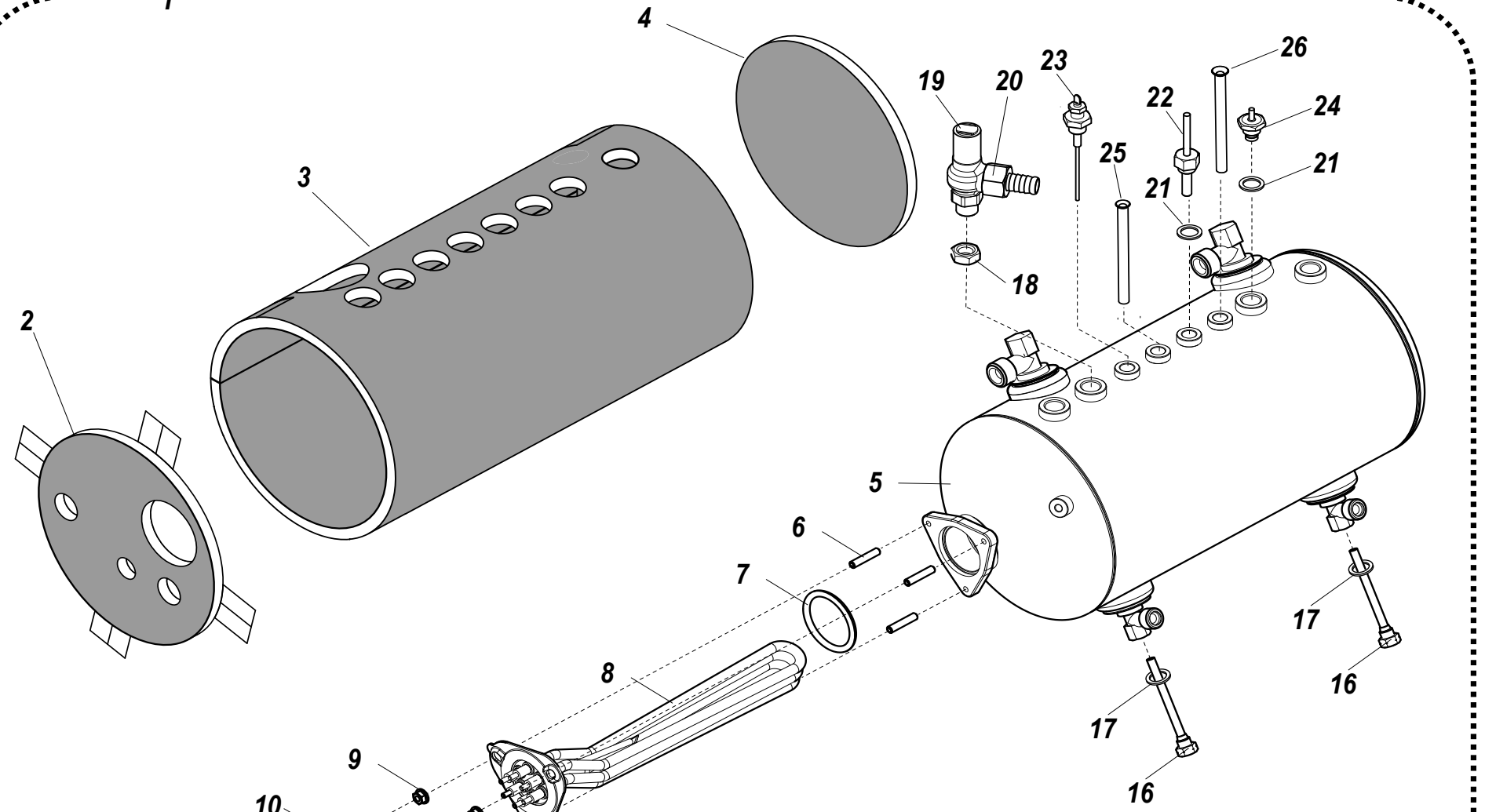

| RIF. POS. | CODICE *CODE* | DESCRIZIONE | DESCRIPTION | NOTE *NOTES* |
|---|---|---|---|---|
| 1A | 10041310 | ASS.CALD.F18SB 2GR SED 2700W | BOILER F18SB 2GR 2700W ASSEMBLY | 2GRUPPI / 2GROUPS |
| 1B | 10041312 | ASS.CALD.F18SB 2GR SED 4000W | BOILER F18SB 2GR 4000W ASSEMBLY | 2GRUPPI / 2GROUPS |
| 1C | 10041314 | ASS.CALD.F18SB 2GR SED 4500W | BOILER F18SB 2GR 4500W ASSEMBLY | 2GRUPPI / 2GROUPS |
| 1D | 10041320 | ASS.CALD.F18SB 3GR SED 5100W | BOILER F18SB 3GR 5100W ASSEMBLY | 3GRUPPI / 3GROUPS |
| 1E | 10041322 | ASS.CALD.F18SB 3GR SED 6000W | BOILER F18SB 3GR 6000W ASSEMBLY | 3GRUPPI / 3GROUPS |
| 2 | 10025674A | ISOL.ISOSOL-EC FOND.RES.CAL.F18SB D190 | LEFT BOILER INSULATON F18SB | |
| 3A | 10025670A | ISOL.ISOSOL-EC CALD.F18SB 2GR D190 | BODY BOILER INSULATION F18SB 2GR | 2GRUPPI / 2GROUPS |
| 3B | 10025672A | ISOL.ISOSOL-EC CALD.F18SB 3GR D180 | BODY BOILER INSULATION F18SB 3GR | 3GRUPPI / 3GROUPS |
| 4 | 10025676A | ISOL.ISOSOL-EC FOND.DX.CAL.F18 D190 | RIGHT BOILER INSULATION F18SB | |
| 5A | 10004914A | CALDAIA RA.2 D190 12L FLANG.TR. | BOILER 12L D190 | 2GRUPPI / 2GROUPS |
| 5B | 10004916A | CALDAIA RA.2 D190 18L FLANG.TR. | BOILER 18L D190 | 3GRUPPI / 3GROUPS |
| 6 | 10806076 | GRANO M6x30 A2 S/PUNTA | M6X30 GRUB A2 | |
| 7 | 10505140 | OR 6187 D47X5,34 SIL.ROS.70SH FDA IR. | O-RING 6187 D47X5,34 RED SIL.70SH | |
| 8A | 10455280 | RESIST.2700W 230V INC.+FL.TR.304 IR. | HEATING ELEMENT 2700W 230V TRIANG.INCOL. | 2GRUPPI / 2GROUPS |
| 8B | 10455282 | RESIST.4000W 230V INC.+FL.TR.304 IR. | HEATING ELEMENT 4000W 230V TRIANG.INCOL. | 2GRUPPI / 2GROUPS |
| 8C | 10455240A | RESIST.4500W 230V INC.+FL.TR.304 IR. | HEATING ELEMENT 4500W 230V TRIANG.INCOL. | 2GRUPPI / 2GROUPS |
| 8D | 10455284 | RESIST.5100W 230V INC.+FL.TR.304 IR. | HEATING ELEMENT 5100W 230V TRIANG.INCOL. | 3GRUPPI / 3GROUPS |
| 8E | 10455286 | RESIST.6000W 230V INC.+FL.TR.304 IR. | HEATING ELEMENT 6000W 230V TRIANG.INCOL. | 3GRUPPI / 3GROUPS |
| 9 | 10809038 | DADO 6MA FLANG.ZIGR.INOX A2 DIN6923 | FLANGED NUT 6MA A2 | |
| 10 | 10455216 | PROTEZ.CONTATTI RESIS.FLANG.TR.DH. | TRIANG.HEATING ELEMENT PROTECTION | |
| 11 | 10809012 | DADO 6MA FLANG.ZIGR.ZN CL8 | FLANGED NUT 6MA | |
| 12 | KITPONDADRON | KIT PONTI DADI RONDELLA CALDAIA F18SB | NUT WASHER BRIDGE BOILER KIT F18SB | |
| 13 | 10806054 | DADO M4 RESIST.IRCA OT63 UNI5588 | IRCA HEATING ELEMENT NUT M4 | |
| 14 | 10809024 | ROND.D4,3x9x0,8OT.UNI6592 RES.REART | WASHER HEATING ELEMENT | |
| 15 | 10106069 | PONTE OTT.COLL.RESIST.IRCA | HEATING ELEMENT BRIDGE IRCA | |
| 16 | 10042070 | INIET.D.8 C/PTFE+RAC+NIPL L.21 | INJECTOR D.8 L21 PTFE | |
| 17 | 10852214 | RONDELLA RAME HOV.1/4" D.14X18X2MM | COPPER WASHER HOV.1/4 D14X18X2MM | |
| 18 | 10805572 | DADO 3/8" ES22 H5 OTTONE | NUT 3/8 BRASS HEXAGONAL | |
| 19 | 10652056B | VALVOLA DI SICUREZZA 1,8 Bar | 1,8 Bar SECURITY VALVE | |
| 20 | 10853132 | RACCORDO DIRITTO PORTAGOMMA | F1/2 RUBBER HOLDER STRAIGHT FITING F1/2 | |
| 21 | 10852180 | RONDELLA RAME 1/4" 13.5X19X1.5 | COPPER WASHER 1/4 13,5X19X1,5 | |
| 22 | 10112178C | SONDA NTC 3.3K 100°1/4"M OT57+GUAI.4KV | NTC TEMP. SENSOR 1/4"" M | |
| | | | | SEGUE / CONTINUE ----> |

# CALDAIA / BOILER



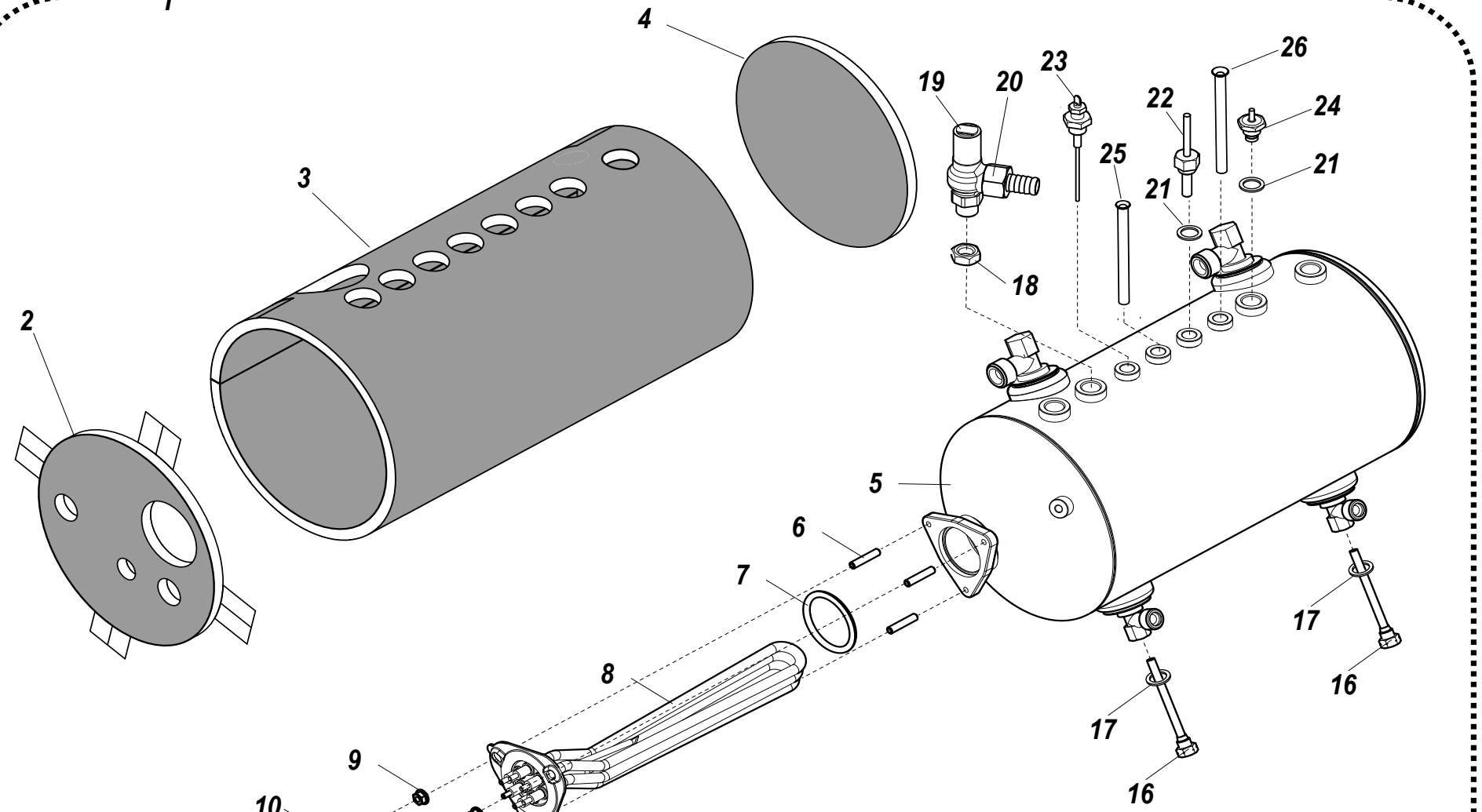

# CALDAIA / BOILER



| RIF. POS. | CODICE *CODE* | DESCRIZIONE | DESCRIPTION | NOTE *NOTES* |
|---|---|---|---|---|
| 23 | 10112064A | SONDA LIVELLO TL10/B120mm FTFL OT57 | LEVEL PROBE 120MM CW510L | |
| 24 | 10652040A | VALVOLA SFIATO CALD.C/PER.PTFE INOX | SAFETY VALVE DRIP TRAY LID | |
| 25 | 10006128 | TUBO CARTELLATO D.8 1/4 F18SB 2-3GR | FLARED PIPE D8 1/4 F18SB | |
| 26 | 10003302 | PESCANTE ZOE KOMP.TUBO CARTEL. D.8 | INLET TUBE D8 | |

# MASSELLO / FILLING BLOCK



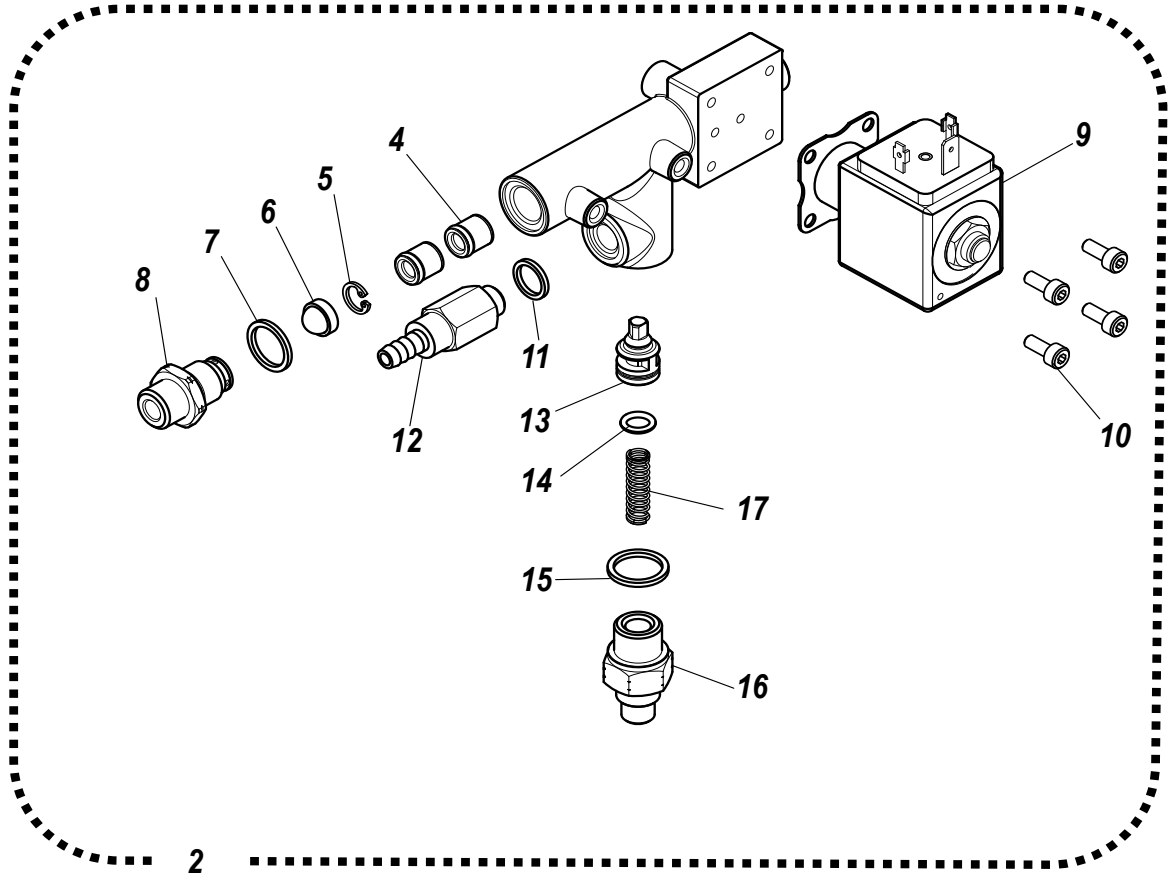


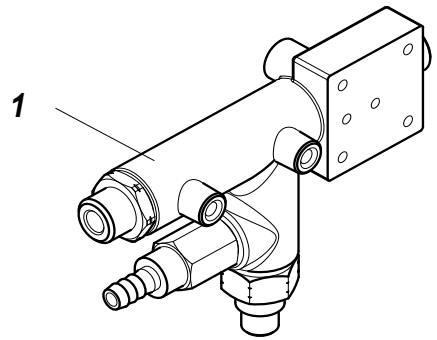

# MASSELLO / FILLING BLOCK



| RIF. POS. | CODICE *CODE* | DESCRIZIONE | DESCRIPTION | NOTE *NOTES* |
|---|---|---|---|---|
| 1 | 10056058F | CORPO MASS.LIG.2VN PR.OT57+M.D4 | LIGHT FILLING BLOCK BODY CW510L | |
| 2 | 10041300 | ASS.MASS.CAR.230V F18 SB 32X32 OT57 | FILL.BLOCK ASS.230V 32X32 F18SB CW510L | |
| 4 | 10652052 | VALVOLA ANTIRIFLUSSO DW10 DN6 | CHECK VALVE DW10 DN6 | |
| 5 | 10806288 | ANELLO SEEGER 10X1 DIN472 UNI7437 A2 | SEEGER RING 10X1 DIN472 UNI7437 A2 | |
| 6 | 10355172 | FILTRO RETE TONDO D11,5 H7,5 AISI304 | CIRCULAR NET FILTER D11,5 H7,5 AISI304 | |
| 7 | 10058050 | RONDELLA RAME 1/4" MASSELLO CA LIGHT | COPPER WASHER 1/4" LIGHT FILLING BLOCK | |
| 8 | 10058044A | RACCORDO 1/4-1/4 AL.MASS.LIGHT CW510L | UNION 1/4-1/4 LIGHT FILLING BLOCK | |
| 9 | 10302130B | ELET.2V X32 230/50-240/60HZ D2,5 316L | 2 WAY SOLENOID VALVE 230-240V D2,5 316L | |
| 10 | 10805071 | VITE TCEI M4X10 A2 UNI 5931 | TCEI M4X10 SCREW | |
| 11 | 10058048 | RONDELLA RAME 1/8" MASSELLO CA LIGHT | COPPER WASHER 1/8" LIGHT FILLING BLOCK | |
| 12 | 10655557C | VALV.ESP.M1/8 RES.D7 ES.14 12B | EXPANSION VALVE M1/8 RES.D7 EX.14 12B | |
| 13 | 10058027A | PISTONCINO MAGG.CORPO MASS.CAR.VR CW510L | FILL BLOCK BODY PISTON CW510L | |
| 14 | 10402068A | OR 106 NBR-FDA D6,75X1,78 INI.CAPP/MASS | D6,75X1,78 NBR-FDA 106 O RING | |
| 15 | 10053109 | RONDELLA RAME VALV. SCNR MASSELLO | COPPER VALVE WASHER FILL.BLOCK | |
| 16 | 10058052A | NIPLESS VALV.NR.MASS.LIGH.CR OT57 | NIPLESS CHECK VALVE CW510L | |
| 17 | 10053110 | MOLLA VALV. RIT. DOS SAE N7 MASSELLO | BODY VALVE SPRING N7 FILL.BLOCK | |

SEGUE / CONTINUE ---->

# GRUPPO EROGAZIONE / GROUP HEAD



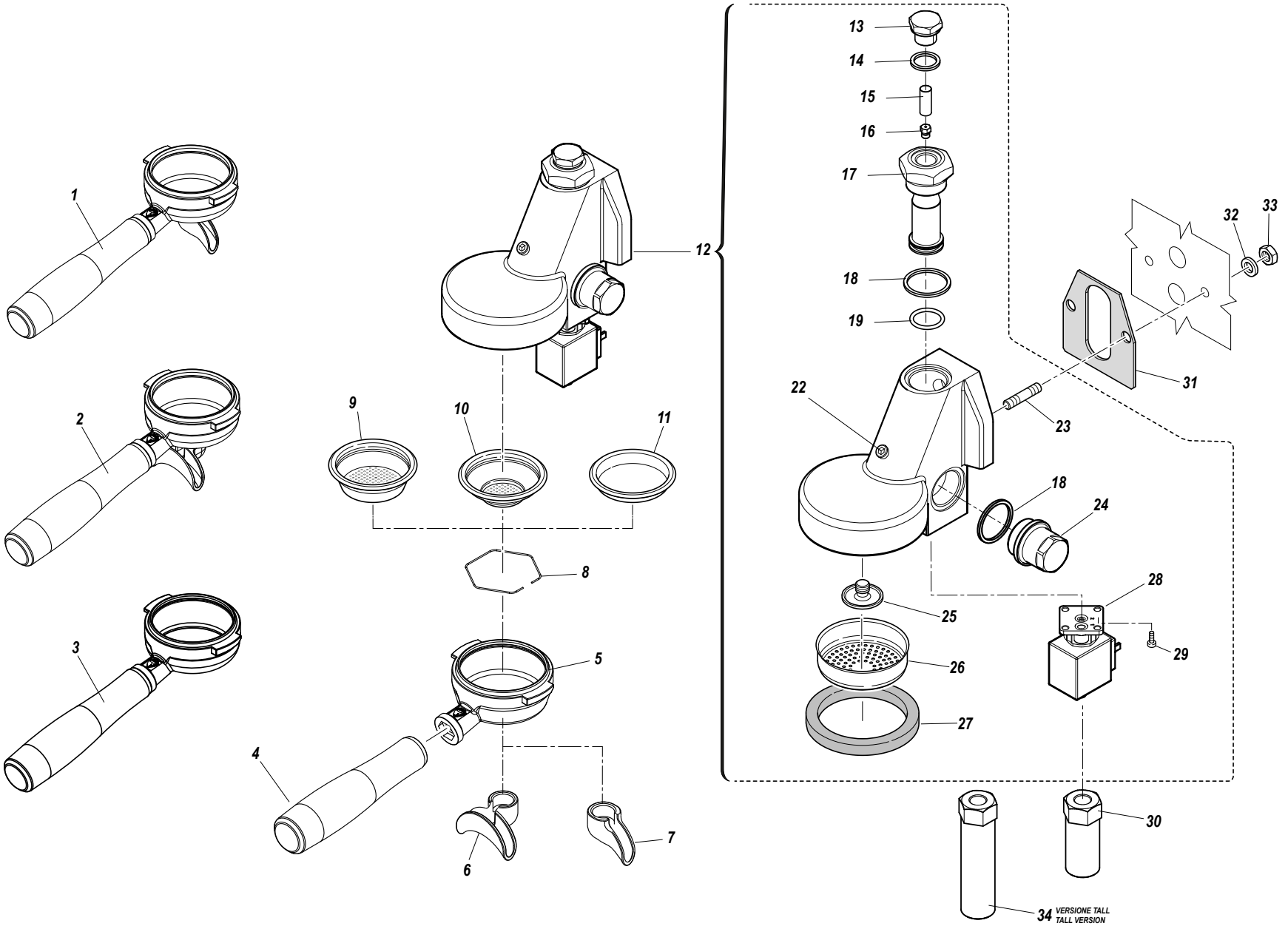

| RIF. POS. | CODICE *CODE* | DESCRIZIONE | DESCRIPTION | NOTE *NOTES* |
|---|---|---|---|---|
| 1A | KPOVRRS1TZ6A | ASSIEME PORTAFILTRO 1 TAZZA VR RS ITA 6g | VR RS ITA 6g 1 PORTAFILTER ASSEMBLY | |
| 1B | KPOVRRS1TZ7A | ASSIEME PORTAFILTRO 1 TAZZA VR RS UK 7g | VR RS UK 7g 1 PORTAFILTER ASSEMBLY | |
| 2A | KPOVRRS2TZ16A | ASSIEME PORTAFILTRO 2 TAZZE VR RS ITA 14-16g | VR RS ITA 14-16g 2 PORTAFILTER ASSEMBLY | |
| 2B | KPOVRRS2TZ20A | ASSIEME PORTAFILTRO 2 TAZZE VR RS UK 20g | VR RS UK 20g 2 PORTAFILTER ASSEMBLY | |
| 3A | KPOZOVRSF16GA | K.PORT.ZO/VR/F18 S/FON.FIL.C.16G AG.7.20 | NAKED 16GR FILTER HOLDER KIT | |
| 3B | KPOZOVRSF18GA | K.PORT.ZO/VR/F18 S/FON.FIL.C.18G AG.7.20 | NAKED 18GR FILTER HOLDER KIT | |
| 4 | 10080760A | MANICO P/FILTRO SR PLASTIC.TORN. | SR PORTAFILTER HANDLE PLASTIC | |
| 5A | 10054000A | CORPO PORTAFILTRO OT57 CROM.NSF | FILTER-HOLDER BODY CW510L | |
| 5B | 10054002 | CORPO PORTAFILTRO OT57 CROM.NSF SENZA FONDO | FILTER-HOLDER BODY CW510L NAKED | |
| 6 | 10054040 | BECCUCCIO 2 VIE COM.AP.CW510L CROM.NSF | 2 WAY NOZZLE CW510L | |
| 7 | 10054030 | BECCUCCIO 1 VIA COM.AP.CW510L CROM.NSF | 1 WAY NOZZLE CW510L | |
| 8 | 10052050 | MOLLA FERMA FILTRO D1.2 8F255 | STOP FILTER SPRING 7-14GR | |
| 9 | 10053046 | FILTRO 2 TZ PIA.H26,5MM COMPET.20GR | 20GR 2 CUPS FILTER H26,5MM | |
| 10 | 10052100 | FILTRO 1 TAZZA 7GR | 1 CUP FILTER 7GR | |
| 11 | 10052220A | FILTRO CIECO IN ACCIAIO H16 | BLIND FILTER STELL H16 | |
| 12 | 10041306 | ASS.GRUPPO E61 F18SB | GROUP ASSEMBLY E61 F18SB | |
| 13 | 10052137A | TAPPO CHI.GIG.GR.E61 CR F. | GIGLEUR CLOSING TOP GR.E61 | |
| 14 | 10502105A | GUARN.FUNGO SUP.GR.E61 22X17X2 | UPPER SEAL GR.E61 22X17X2 | |
| 15 | 10052136 | FILTRO GR.E-61/ANELLO INOX D.8,5X22X0,15 | GROUP INOX E61 FILTER D.8,5X22X0,15 | |
| 16 | 10052135A | GIGLEUR GRUPPI F.D.0,8 OT.GR OT57 | GROUP GIGLEUR D0,8 CW510L | |
| 17 | 10052133A | FUNGO SUPER.GRUPPO E-61 | UPPER GROUP E61 MASHROOM | |
| 18 | 10502090A | GUARN. LAT.FUNGO GR.E61 | SIDE GROUP E61 MASHROOM SEAL | |
| 19 | 10502100 | GUARN.FUNGO EROG.GRUPP.E61 OR128 | GROUP E61 MASHROOM SEAL | |
| 22 | 10805078 | VITE TCEI M6X8 A2 UNI 5931 | SCREW TCEI M6X8 | |
| 23 | 10052134 | PRIGIONIERI GRUPPO E61 | ROUP HEAD STUD | |
| 24 | 10052132A | FUNGO LATER.GRUPPO E-61 | SIDE GROUP MASHROOM | |
| 25 | 10052141A | DIFFUSORE GRUPPO E61 OT.CW510L | GROUP E61 DIFFUSER CW510L | |
| 26 | 10052120 | DOCCIA A RETE GRUPPO E61 | GROUP E61 HEAD SHOWER AISI304 | |
| 27 | 10502160 | GUARNIZ.SOTTOC. H8,5mm GRUPPO E61 | H8,5 UNDER CUP SEAL GROUP E61 | |
| 28 | 10302088B | ELET.3V 230V 32X32 RUB.OT57-316L | 3 WAY SOLENOID VALVE 230V CW510L-316L | |
| 29 | 10805071 | VITE TCEI M4X10 A2 UNI 5931 | TCEI M4X10 SCREW A2 | |
| 30 | 10039096 | RACCORDO UNICO DI SCARICO F18 | EXHAUST VALVE FITTING | |
| | | | | SEGUE / CONTINUE ----> |

# GRUPPO EROGAZIONE / GROUP HEAD



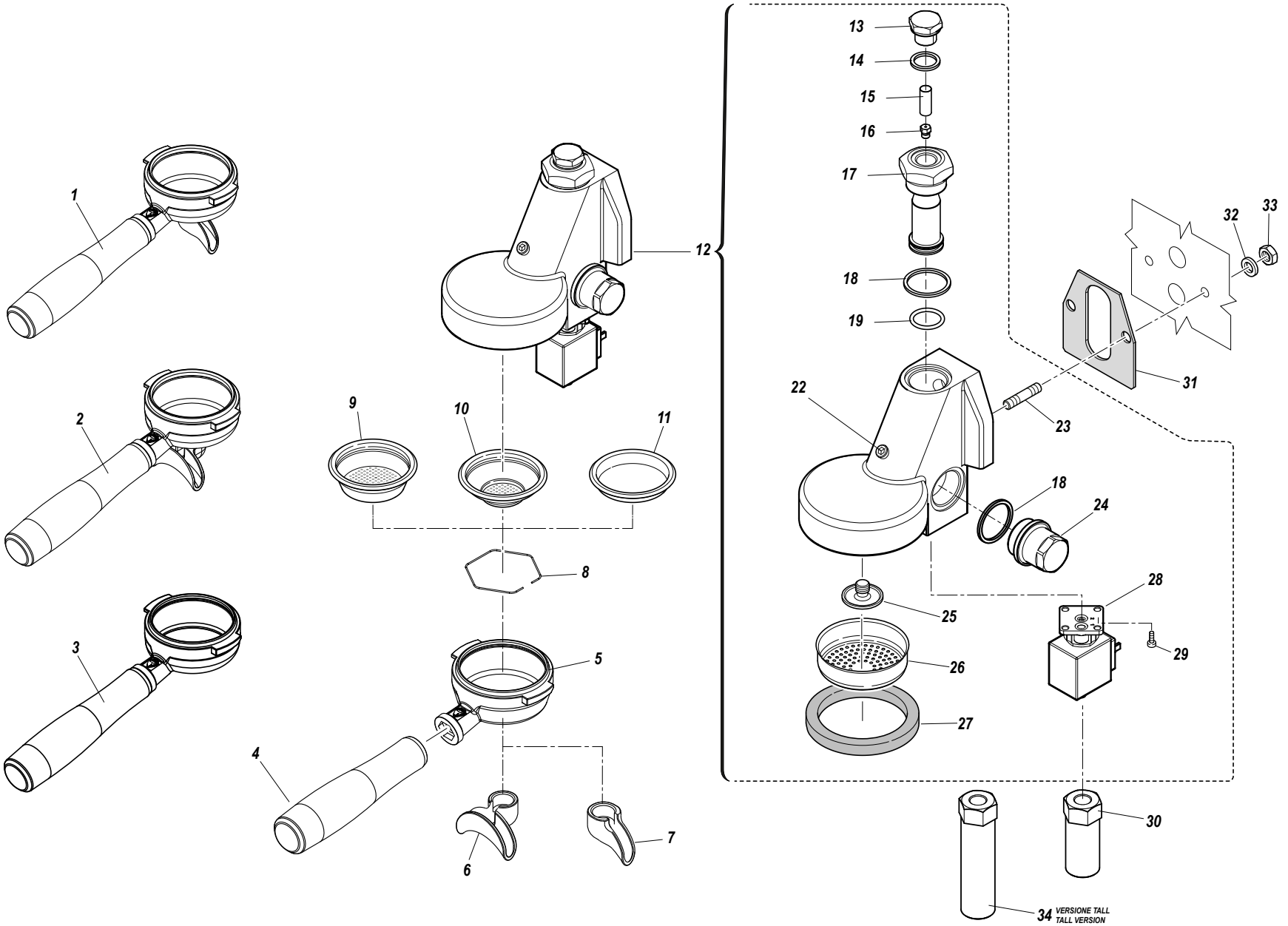

# GRUPPO EROGAZIONE / GROUP HEAD



| RIF. POS. | CODICE *CODE* | DESCRIZIONE | DESCRIPTION | NOTE *NOTES* |
|---|---|---|---|---|
| 31 | 10502130 | GUARN. BLOCC. GRUPPO E61 | GROUP E61 LOCK SEAL | |
| 32 | 10803521 | RONDELLA D8,2 DENT.INT.ZN | SERRATED WASHER D 8.2 ZN | |
| 33 | 10802500 | DADO 8MA MEDIO ZN CL8PG | 8MA HALF ZN NUT | |
| 34 | 10302512B | RACC.UNICO SCARICO EV OP AISI304 LUCID. | EXHAUST VALVE CONNECTOR AISI304 | |

# SPORTELLO ELETTRICO SINISTRO / LEFT ELECTRIC PANEL



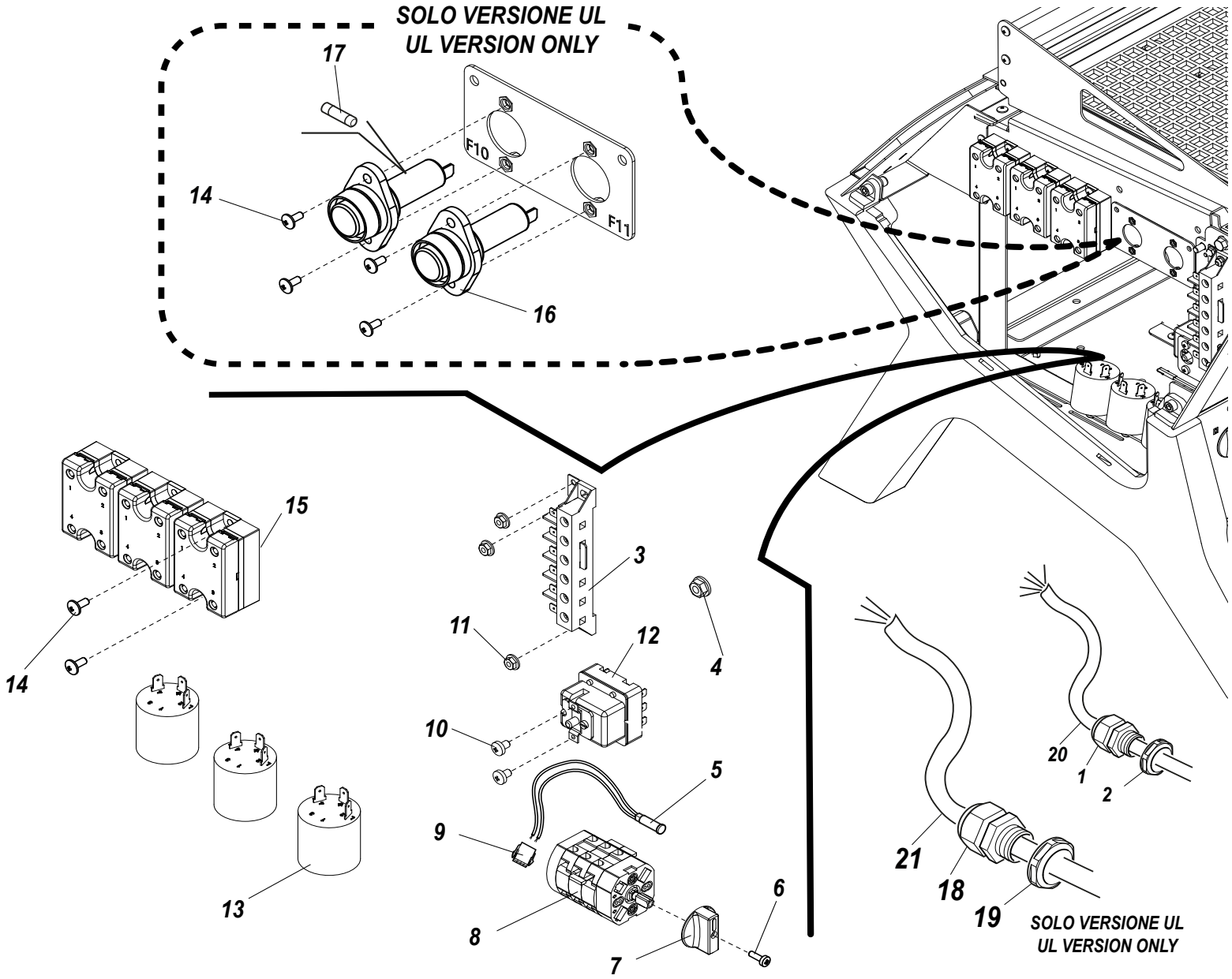

# SPORTELLO ELETTRICO SINISTRO / LEFT ELECTRIC PANEL



| RIF. POS. | CODICE *CODE* | DESCRIZIONE | DESCRIPTION | NOTE *NOTES* |
|---|---|---|---|---|
| 1 | 10102250A | PRESSAC.AL.PG 21 ANTIST.UL BIMED | CABLE GLAND PG21 | |
| 2 | 10102249A | CONTROD.ESAG.PG.21 UL BIMED NERO | HEXAGONAL PG.21 LOCKNUT | |
| 3 | 10106082 | MORSETTIERA 6 POLI VITE/FAST-ON FV122B | TERMINAL BOARD 6P VI/FAST UL | |
| 4 | 10809038 | DADO 6MA FLANG.ZIGR.AISI CL8 | FLANGED NUT 6MA | |
| 5 | 10553019 | SPIA ARAN.D6 230V CB-UL AWG CABL.2FS. | ORANGE LIGHT D6 230V AWG | |
| 6 | 10805116 | VITE TC+ M3X10 TRUC.ZN NERA COMMUT.GGT | SCREW TC+ M3X10 | |
| 7 | 10122015 | MANOPOLA PER COMMUTATORE | SWITCH KNOB | |
| 8 | 10122066 | COMMUTATORE PON.TRIF P020 20A | THREE PHASE SWITCH | |
| 9 | 10105180A | BLOCCHETTO 2 VIE M.BIANCO GWIT750 | 2 WAY WHITE BLOCK GWIT750 | |
| 10 | 10805872 | VITE TC+ M4X6 ZN UNI 7687 | SCREW TC+ M4X6 ZN | |
| 11 | 10809011 | DADO 4MA FLANG.ZIGR.ZN CL8 | M4 FLANGED NUT | |
| 12 | 10112015A | TERMOSTATO 169° A RIARMO MANUALE TRIF. | THREE PHASES MANUAL THERMOSTAT 169° | |
| 13A | 10252027 | FILTRO CON.DEM F3CF70112F C/FAS. | CONDENSER FILTER | UL VERSION |
| 13B | 10252017 | FILTRO CON.DEM F3CF70112F C/FAS.+COD.M8 | CONDENSER FILTER | |
| 14 | 10805027A | VITE TBL+ M4X10 A2 LUCIDE T/T PH2 | TBL+ M4X10 A2 SCREW | |
| 15 | 10112262A | RELE' ST.RELAY 4-32V DC 25A 280V UL CE | STATIC RELAY 4-32V DC 25A 280V | |
| 16 | 10111140 | PORTAFUSIBILE 10X38 30A 600V GPM-SRR | FUSE BOX 10X38 30A 600V | UL VERSION |
| 17 | 10111108 | FUSIB.20A 10X38 BUSS.FNQ UL-E19180 | FUSE 20A 10X38 UL-E19180 | UL VERSION |
| 18A | 10102250A | PRESSACAVO AL.PG21 2GR | BLACK CABLE GLAND PG21 2GR | 2GR UL VERSION |
| 18B | 10102118 | PRESSACAVO AL.PG 29 3GR | BLACK CABLE GLAND PG29 3GR | 3GR UL VERSION |
| 19A | 10102249A | CONTRODADO ESAG.PG.21 2GR | BLACK COUNTER NUT PG21 2GR | 2GR UL VERSION |
| 19B | 10102116 | CONTRODADO ESAG. PG.29 3GR | BLACK COUNTER NUT PG29 3GR | 3GR UL VERSION |
| 20A | 10102193A | CAVO ALIMENTAZIONE MONOFASE | POWER SUPPLY CABLE MONOPHASE | |
| 20B | 10102191B | CAVO ALIMENTAZIONE TRIFASE | POWER SUPPLY CABLE THREEPHASE | |
| 21A | 10102710 | CAVO ALIMENTAZIONE UL 2GR | POWER SUPPLY CABLE 2GR | 2GR UL VERSION |
| 21B | 10102709 | CAVO ALIMENTAZIONE UL 3GR | POWER SUPPLY CABLE 3GR | 3GR UL VERSION |

# SPORTELLO ELETTRICO DESTRO / RIGHT ELECTRIC PANEL



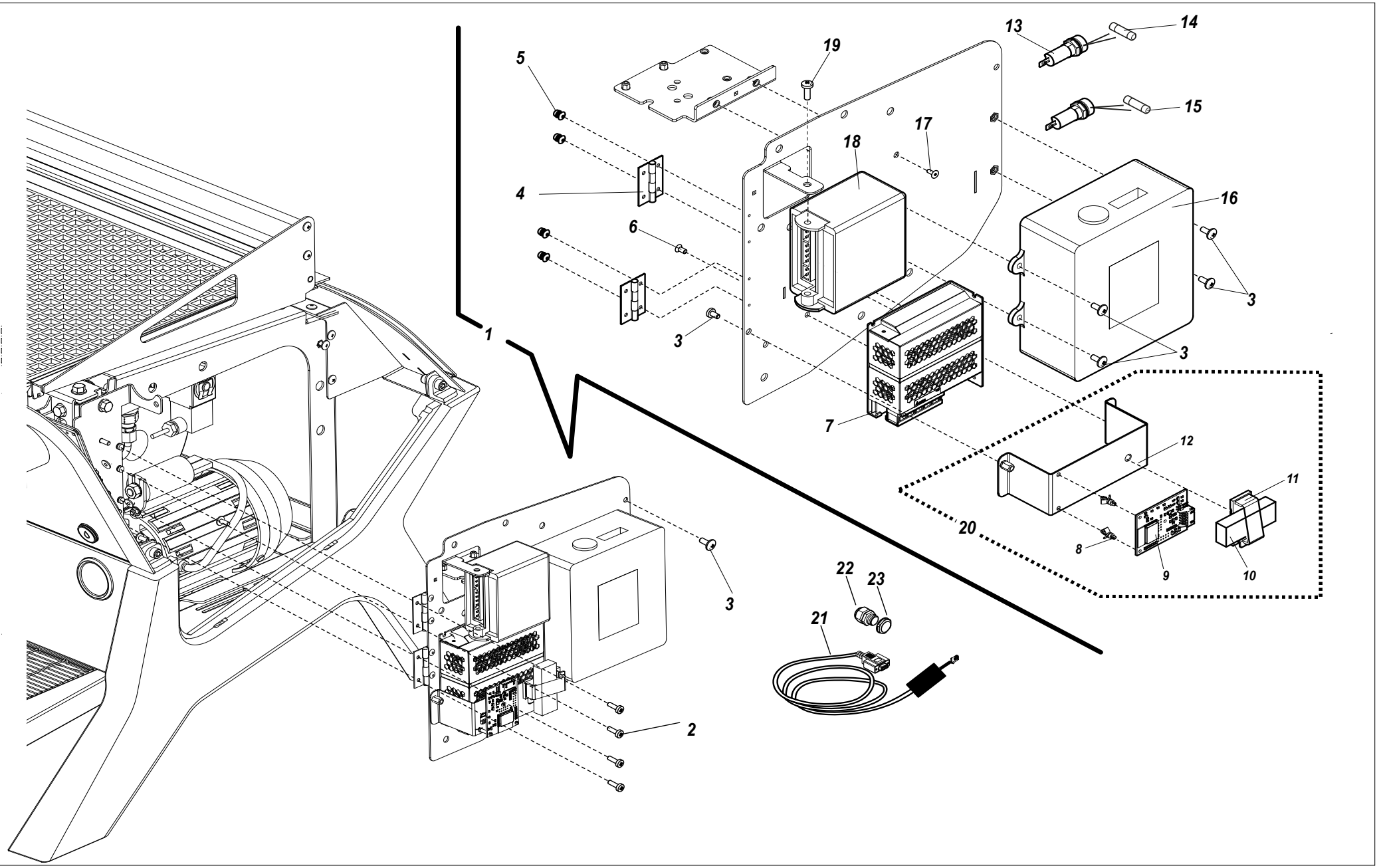

## SPORTELLO ELETTRICO DESTRO / RIGHT ELECTRIC PANEL



| RIF. POS. | CODICE *CODE* | DESCRIZIONE | DESCRIPTION | NOTE *NOTES* |
|---|---|---|---|---|
| 1A | 10041332 | ASS.SPORTELLO ELE.F18SB 2-3GR NO OPT. | RIGHT ELECTRIC SIDE PANEL NO OPTIONAL | |
| 1B | 10041333 | ASS.SPORTELLO ELE.F18SB 2-3GR LED | RIGHT ELECTRIC SIDE PANEL WITH LED | |
| 1C | 10041338 | ASS.SPORTELLO ELE.F18SB 2-3GR C/TVC | RIGHT ELECTRIC SIDE PANEL WITH TVC | |
| 1D | 10041339 | ASS.SPORTELLO ELE.F18SB 2-3GR C/TVC LED | RIGHT ELECTRIC SIDE PANEL WITH TVC/LED | |
| 2 | 10805054 | VITE TC+ M3X10 A2 UNI 7687 | SCREW TC+ M3X10 A2 | |
| 3 | 10805027A | VITE TBL+ M4X10 A2 LUCIDE T/T PH2 | TBL+ M4X10 A2 SCREW | |
| 4 | 10155010 | CERNIERA STRETTA 120/40 INOX | METAL HINGE 120/40 INOX | |
| 5 | 10805948 | RIVETTO D3x5 ALL. A STRAPPO | D3X5 RIVET | |
| 6 | 10805038 | VITE TSP+ M3X6 A2 UNI 7688 | TSP+ M3X6 SCREW | |
| 7 | 10554109A | ALIMENTATORE SWITCH 35W 24V UR TUV | SWITCH POWER PACK 35W 24V | |
| 8 | 10355077 | DISTANZIALE DOPPIO INNESTO F3 F2,5 L4,7 | CIRCUIT SHIM F3 F2,5 L4,7 | |
| 9 | 10112532A | SCHEDA INTERF.WI-FI S/C.AGG.P.0718 | WI-FI INTERFACE BOARD | |
| 10 | 10112596 | SCHEDA ALIM.INTERF.WI-FI C/CONN.DIRET | WI-FI INTERFACE POWER SUPPLY BOARD | |
| 11 | 10355094 | FERMACAVO CAVI PIATTI CONF.200PZ | CLAMP FOR POWER SUPPLY | |
| 12 | 10086058A | STAFFA SUPPORTO WIFI F18 SB | WIFI SUPPORT PLATE F18SB AISI430 | |
| 13 | 10111094 | CORPO PORTAFU.5X20MM TER.3/16" | FUSE HOLDER 5X20 | |
| 14 | 10111085A | FUSIB.VETRO 1A 5X20F 250V VDE-UL-CSA-PSE | GLASS FUSE 1,25 A 5X20F 250V VED-UL-CSA | OPTIONAL LED ONLY (F1) |
| 15 | 10111192A | FUSIBILE VET.2AT 5X20 250V VDE-UL | GLASS FUSE 2AT 5X20 250V VDE-UL | ELECTRIC MOTOR ONLY (F3) |
| 16 | 10114670A | CENTRALINA 3D5 MAESTRO FR2020 | CONTROL UNIT 3D5 FR2020 F18SB | |
| 17 | 10805220 | VITE TSP+ M3X10 A2 UNI 7688 | SCREW TC + M3X10 A2 UNI7688 | |
| 18 | 10112186A | CENTRALINA SCHEDA ESP.3 RELE'TVC C/AER. | 3 RELAYS EXPANSION BOARD TVC | |
| 19 | 10805114 | VITE TC+ SW M5X12 ZN AUTOMASCH. | TC+ M5X12 SCREW | |
| 20 | KITF18SBSUWI | KIT SUPPORTO WIFI F18SB | WIFI SUPPORT KIT F18SB | |
| 21 | 10112458 | SCHEDA INTERFACCIA 3D-PC CON CAVO SEN.CD | 3D-PC BOARD WITH CABLE | |
| 22 | 10102954 | PRESSACAVO AL.PG7 ANTIST.UL BIMED NE | UL CABLE GLAND PG7 | |
| 23 | 10102956 | CONTRODADO ESAG. PG.7 UL BIMED NE | COUNTER NUT PG7 UL HEXAGONAL | |

# OPTIONAL LED



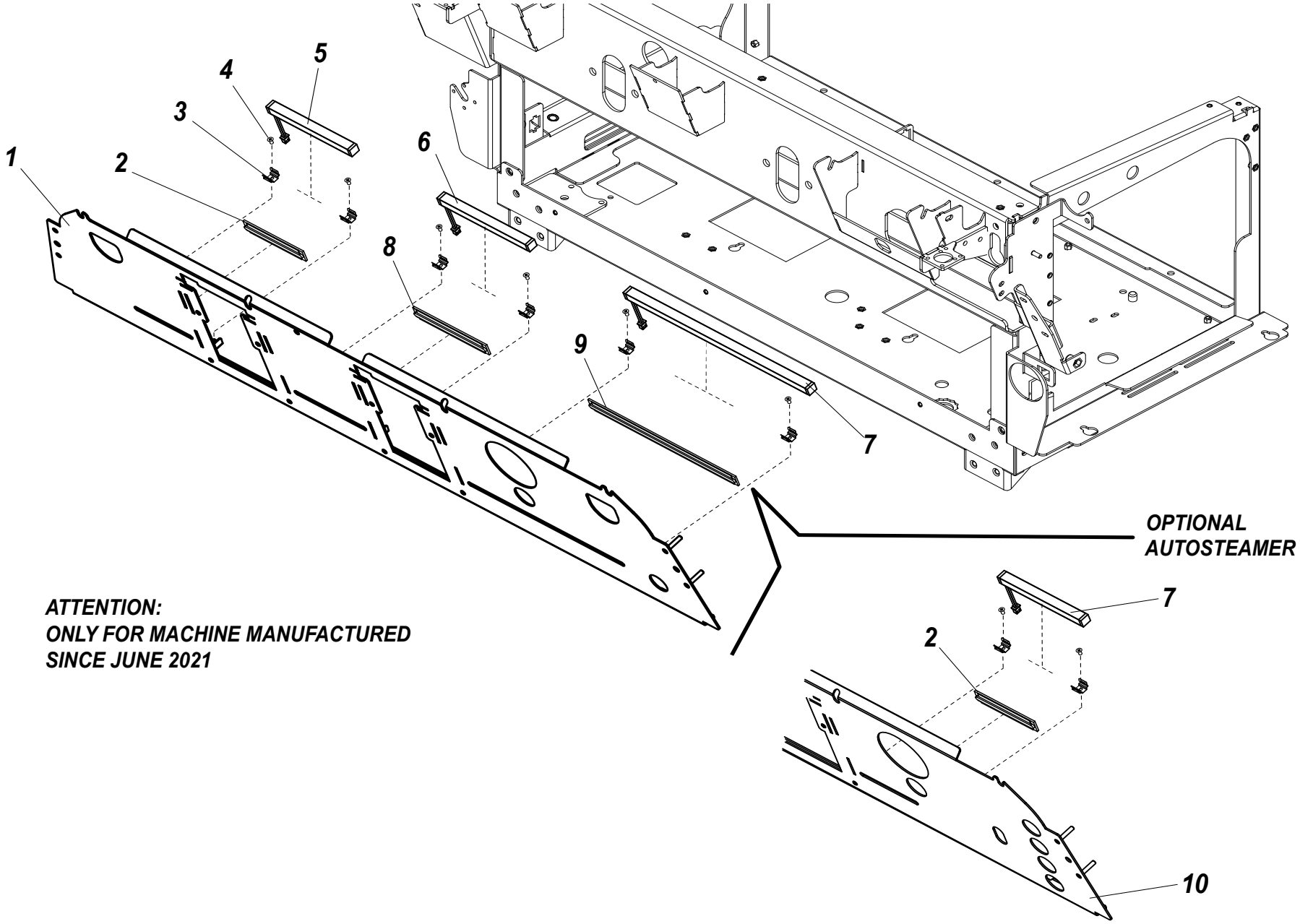


***ATTENTION:***
***ONLY FOR MACHINE MANUFACTURED***
***SINCE JUNE 2021***

# OPTIONAL LED



| RIF. POS. | CODICE *CODE* | DESCRIZIONE | DESCRIPTION | NOTE *NOTES* |
|---|---|---|---|---|
| 1A | 10086301A | PROTEZIONE FRONTALE SUPERIORE 2GR LED NERA OPACA | MATT BLACK UPPER FRONTAL PROTECTION 2GR LED | 2GRUPPI / 2GROUPS |
| 1B | 10087301A | PROTEZIONE FRONTALE SUPERIORE 3GR LED NERA OPACA | MATT BLACK UPPER FRONTAL PROTECTION 3GR LED | 3GRUPPI / 3GROUPS |
| 2A | 10031120 | OPALINO SINISTRO 2GR | LEFT OPAL 2GR | 2GRUPPI / 2GROUPS |
| 2B | 10031126 | OPALINO SINISTRO 3GR | LEFT OPAL 3GR | 3GRUPPI / 3GROUPS |
| 3 | 10554152A | SUPPORTO BARRA LED | LED BAR SUPPORT | |
| 4 | 10805038 | VITE TSP+ M3X6 | TSP+ M3X6 SCREW | |
| 5A | 10554220A | BARRA LED SINISTRA 2GR | LEFT LED BAR 2GR | 2GRUPPI / 2GROUPS |
| 5B | 10554226A | BARRA LED SINISTRA 3GR | LEFT LED BAR 3GR | 3GRUPPI / 3GROUPS |
| 6 | 10554222A | BARRA LED CENTRALE | CENTER LED BAR | |
| 7A | 10554224A | BARRA LED DESTRA 2GR | RIGHT LED BAR 2GR | 2GRUPPI / 2GROUPS |
| 7B | 10554228A | BARRA LED DESTRA 3GR | RIGHT LED BAR 3GR | 3GRUPPI / 3GROUPS |
| 8 | 10031122 | OPALINO CENTRALE | CENTER OPAL | |
| 9A | 10031124 | OPALINO DESTRO 2GR | RIGHT OPAL 2GR | 2GRUPPI / 2GROUPS |
| 9B | 10031128 | OPALINO DESTRO 3GR | RIGHT OPAL 3GR | 3GRUPPI / 3GROUPS |
| 10A | 10086303A | PROTEZIONE FRONTALE SUPERIORE 2GR LED TVC NERA OPACA | MATT BLACK UPPER FRONTAL PROTECTION 2GR LED TVC | 2GRUPPI TVC / 2GROUPS TVC |
| 10B | 10087303A | PROTEZIONE FRONTALE SUPERIORE 3GR LED TVC NERA OPACA | MATT BLACK UPPER FRONTAL PROTECTION 3GR LED TVC | 3GRUPPI TVC / 3GROUPS TVC |

# USCITA VAPORE EXTRA / EXTRA OUT STEAM



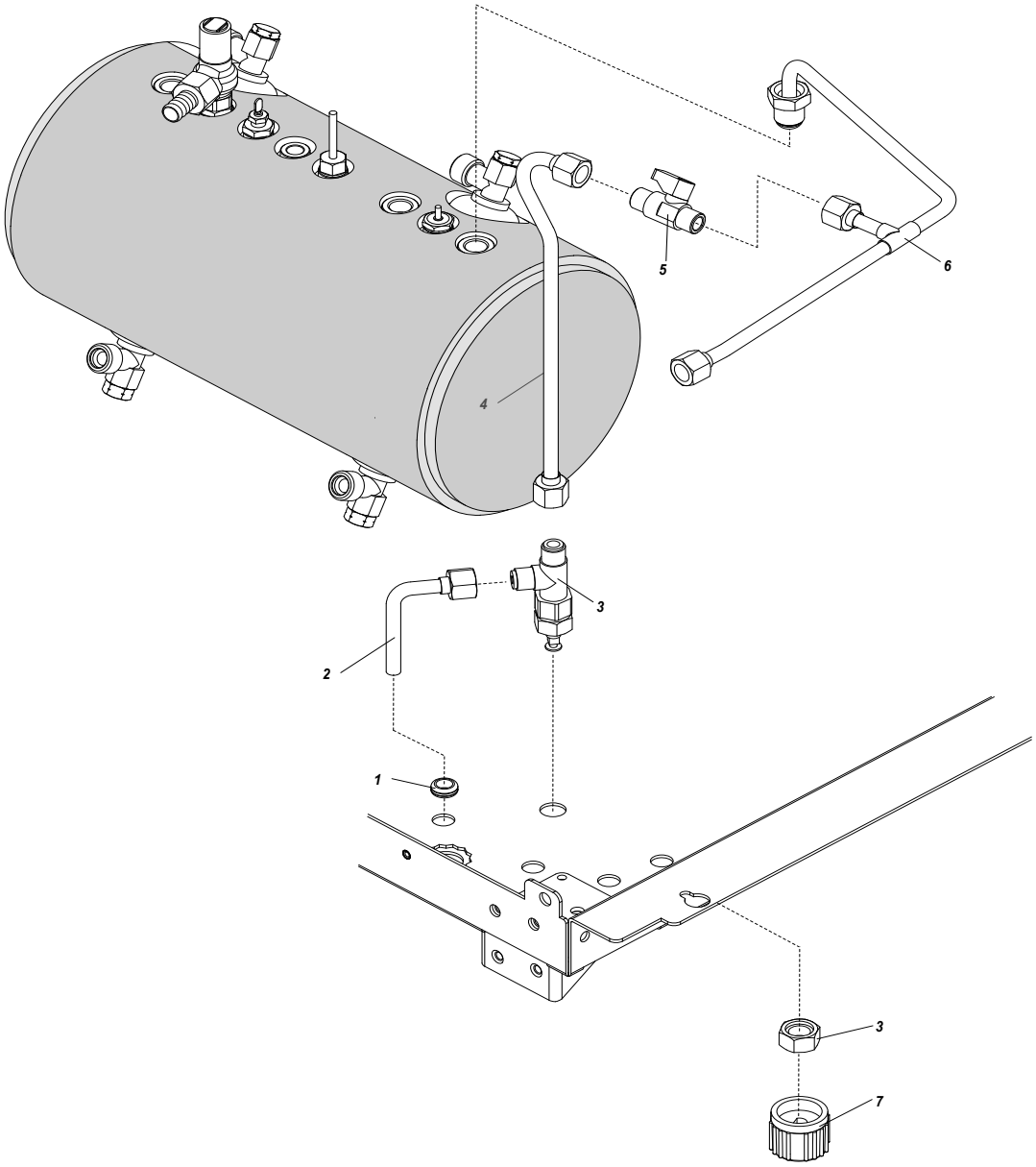

# USCITA VAPORE EXTRA / EXTRA OUT STEAM



| RIF. POS. | CODICE *CODE* | DESCRIZIONE | DESCRIPTION | NOTE *NOTES* |
|---|---|---|---|---|
| 1 | 10112942 | PASSACAVO | RUBBER PIN | |
| 2 | 10006052 | TUBO USCITA VAPORE | STEAM OUT PIPE | |
| 3 | 10402664 | RUBINETTO VAPORE | STEAM TAP | |
| 4 | 10006132 | TUBO PRELIEVO VAPORE RUBINETTO | TAKING OF STEAM PIPE OF TAP | |
| 5 | 10401454A | RUBINETTO 1/4 M/M | TAP 1/4 M/M | |
| 6 | 10006130 | TUBO PRELIEVO VAPORE CALDAIA | TAKING OF STEAM OF BOILER | |
| 7 | 10402696 | MANOPOLA RUBINETTO VAPORE | STEAM TAP KNOB | |

## GRUPPO NUOVO / NEW GROUP



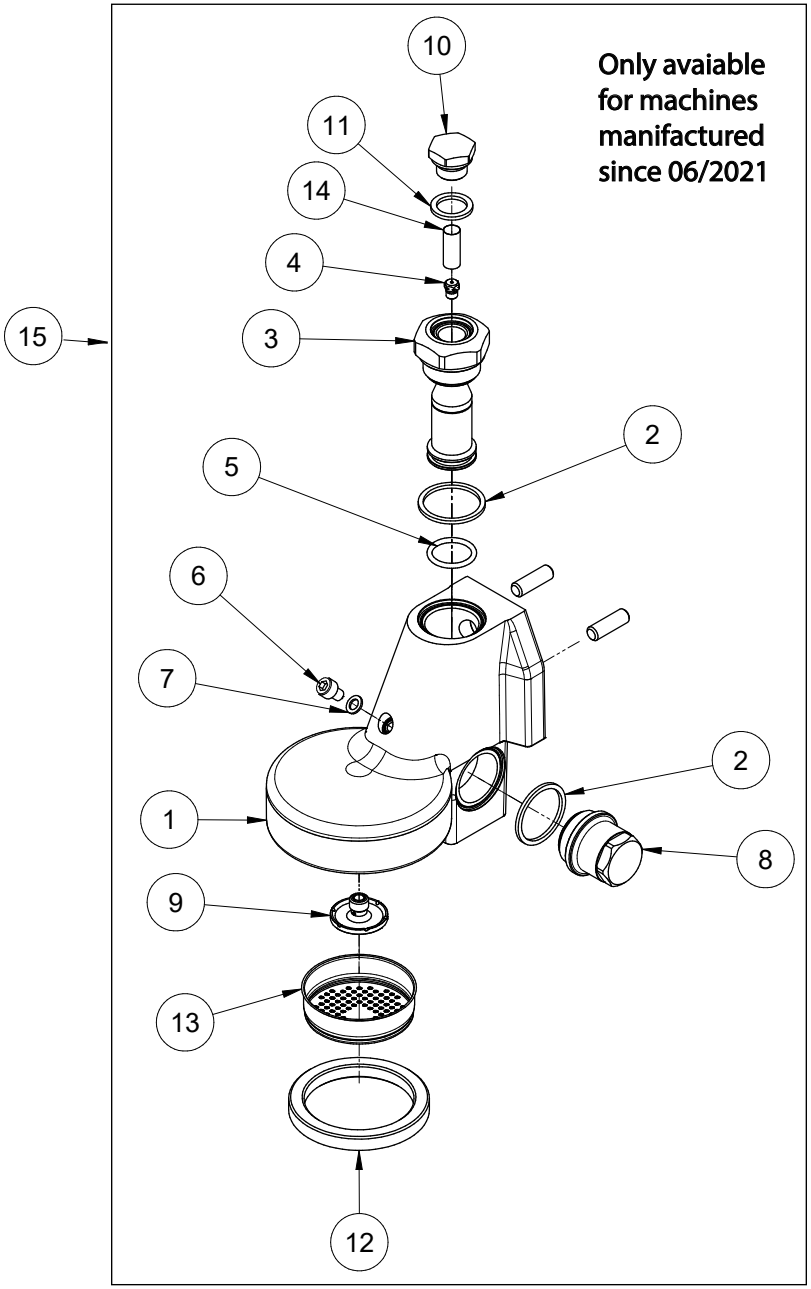

## GRUPPO NUOVO / NEW GROUP



| RIF. POS. | CODICE *CODE* | DESCRIZIONE | DESCRIPTION | NOTE *NOTES* |
|---|---|---|---|---|
| 1 | 10054466 | GRUPPO EROGAZIONE CROMATO GRE61 | CHROMED GROUP EROGATION E61 | |
| 2 | 10054442 | GUARNIZIONE TEFLON M30 Ø35XØI30X2 PTFE | TEFLON GASKET M30 Ø35XØI30X2 PTFE | |
| 3 | 10054468 | CORPO CANOTTO SUPERIORE OT57 CR.NSF | UPPER GROUP E61 MUSHROOM | |
| 4 | 10054434 | GIGLEUR OTT. FORO Ø0,8 CW510L | GIGLEUR HOLE Ø0,8 CW510L | |
| 5 | 10054436 | OR 128 ØI20,62X2,62 EPDM PEROX 70 SHORE | OR 128 ØI20,62X2,62 EPDM PEROX 70 SHORE | |
| 6 | 10805078 | VITE TCEI M6X8 INOX UNI 5931 | TCEI SCREW M6X8 INOX UNI 5931 | |
| 7 | 10054472 | GUARNIZIONE PTFE PER VITE M6 D10XDI6X1 | PTFE SEAL FOR SCREW M6 D10XID6X1 | |
| 8 | 10054474 | TAPPO LATERALE M30X1,5 OT57 | LATERAL CAP M30X1,5 OT57 | |
| 9 | 10054476 | DIFFUSORE GRUPPO MAT.OT57 USA DEPIOMB | GROUP DIFFUSOR OT57 | |
| 10 | 10054478 | TAPPO CORPO CANOTTO SUP.M16X1,5 OT57 | CAP FOR SUPERIOR DINGHY BODY M16X1,5 | |
| 11 | 10054430 | GUARNIZIONE Ø22XØ16X2 PTFE GRUPPO CUBE | PTFE GASKET Ø22XØ16X2 | |
| 12 | 10502160 | GUARNIZ.SOTTOC. H8,5mm GRUPPO E61 | H8,5 UNDER CUP SEAL GROUP E61 | |
| 13 | 10054444 | DOCCETTA ØI57X18,5 AISI304 IMSDR300 | DISTRIBUTION GROUP FILTER ØI57X18,5 A304 | |
| 14 | 10054432 | FILTRO GIGLEUR ØI8,1X22 RETE MF 0,85 | GIGLEUR FILTER ØI8,1X22 A304 | |
| 15 | 10055130 | GRUPPO ER.SAN REMO E61 STEC.RINF.MENON | GROUP INOX E61 FILTER D.8,5X22X0,15 | |




**SANREMO coffee machines s.r.l.**

Via Bortolan, 52

31050 Vascon di Carbonera (Treviso) ITALY

Tel. +39.0422.498900 - Fax. +39.0422.448935

www.sanremomachines.com - E-mail: info@sanremomachines.com

Cod. 83018020 - Agg. 12/2021