GB SPARE PARTS LIST

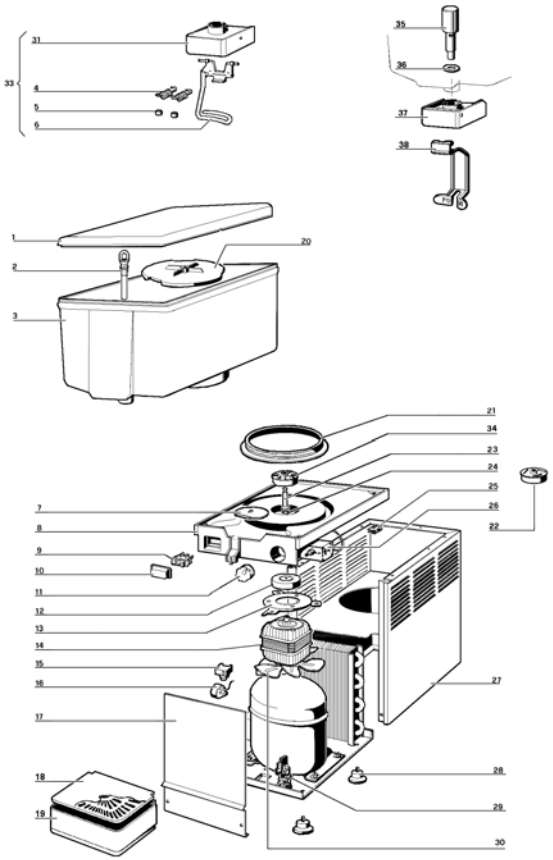

1	**21980-00000**	Cover
2	**21703-00000**	Pinch tube
3	**22800-18730**	10 lt bowl
4	**21705-00000**	Faucet spring
5	**21704-00000**	Rubber spring retainer
6	**21701-00001**	Push handle
7	**21983-00000**	Pump cover fixing clip
8	**33800-05700**	Evaporator assembly
9	**21125-00000**	Switch
10	**22800-05100**	Switch cap
11	**22800-19300**	Thermostat knob
12	**33800-00803**	Magnet
13	**22800-04800**	Motor bracket
14	**22800-18901**	Fan/pump motor

15	***	Relay
16	***	Overload protector
17	**22800-18400**	Caddy 7/1-10/1 dispensing side panel
17	**22800-18420**	Caddy 10/2 dispensing side panel
18	**22800-00500**	Drip tray cover
19	**22800-00600**	Drip tray (grey)
20	**22800-18800**	Pump cover
21	**22081-00001**	Bowl gasket
22	**33800-05401**	Impeller for 7 lt bowl
23	**22800-19900**	Central pivot
24	**22040-00000**	Central pivot OR
25	**10554-45000**	Clip
26	**21087-00001**	Thermostat
27	**22800-18301**	Cabinet for Caddy 7/1 -10/1
27	**22800-18321**	Cabinet for Caddy 10/2
28	**22800-10000**	Leg
29	**22800-05500**	Terminal block with cable clamp
30	**22800-20700**	Fan
31	**01702-00000**	Faucet cover for pinch tube faucet
31	**22800-04410**	Faucet cover for gravity faucet
33	**33800-08900**	Faucet assembly
34	**33800-05402**	Impeller for 10 lt bowl
35	**22800-21900**	Faucet piston
36	**10028-02500**	Faucet gasket
37	**22800-04410**	Faucet cover
38	**22800-02303**	Push handle

*** **Please order what printed on piece**

WIRING DIAGRAM

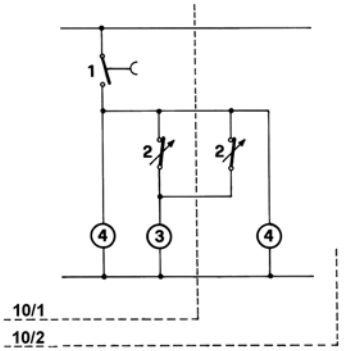

1 Switch
2 Thermostat
3 Compressor
4 Fan/Pump motor

GB SPARE PARTS LIST

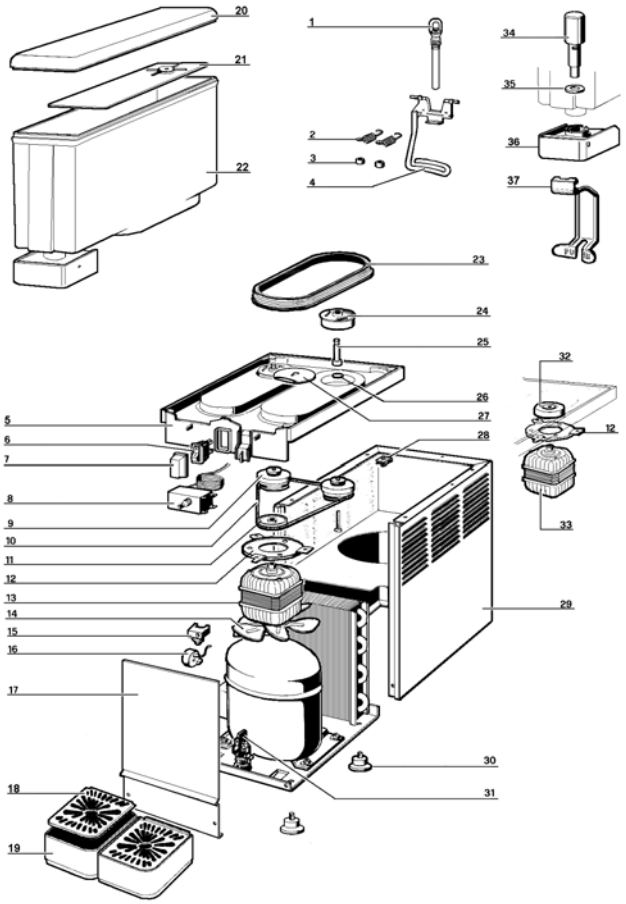

1	**21703-00000**	Pinch tube
2	**21705-00000**	Faucet spring
3	**21704-00000**	Spring holder
4	**21701-00001**	Push handle
5	**33800-05710**	Evaporator assembly
(5)	**33800-05762**	Evaporator assembly Caddy 5/3
6	**21125-00000**	Switch
7	**22800-05100**	Switch cap
8	**21087-00000**	Thermostat
9	**33900-01051**	Pulley, magnet and spacer asbly
10	**22800-01800**	Belt
11	**22800-02201**	Driving pulley
12	**22800-04800**	Motor bracket
13	**22800-18921**	Fan/pump motor

14	**22800-20700**	Fan
15	***	Relay
16	***	Overload protector
17	**22800-18400**	Caddy 5/2 dispensing side panel
17	**22800-18410**	Caddy 5/3 dispensing side panel
17	**22800-18420**	Caddy 5/4 dispensing side panel
18	**22800-00500**	Caddy 5/2, 5/4 drip tray cover
18	**22800-00510**	Caddy 5/3 drip tray cover
19	**22800-00600**	Caddy 5/2, 5/4 drip tray
19	**22800-00610**	Caddy 5/3 drip tray
20	**22800-09110**	Bowl cover
21	**22800-18810**	Pump cover
22	**33800-05615**	Bowl and faucet asbly for pinch tube faucet
22	**33800-05617**	Bowl and faucet asbly for gravity faucet
23	**22800-17200**	Bowl gasket
24	**33800-05401**	Pump impeller
25	**22800-19900**	Central pivot
26	**22040-00000**	Central pivot OR
27	**21983-00000**	Pump cover retainer
28	**10554-45000**	Clip
29	**22800-18301**	Cabinet for Caddy 5/2
29	**22800-18311**	Cabinet for Caddy 5/3
29	**22800-18321**	Cabinet for Caddy 5/4
30	**22800-10000**	Rubber leg
31	**22800-05500**	Terminal block with cable clamp
(32)	**33800-00803**	Motor magnet for Caddy 5/3
(33)	**22800-04706**	Pump motor for Caddy 5/3
34	**22800-21900**	Faucet piston
35	**10028-02500**	Faucet gasket
36	**22800-04410**	Faucet cover
37	**22800-02303**	Push handle

( )	**For Caddy 5/3 only**
***	**Please order what printed on piece**

WIRING DIAGRAM

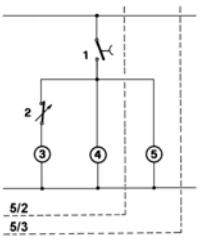

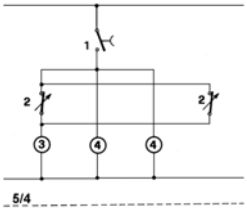

1 Switch
2 Thermostat
3 Compressor
4 Fan/Pump motor
5 Pump