LIST OF THE EXPLODED VIEWS



SHELL ASSY

COOLING SYSTEM

HYDRAULIC CIRCUIT

ELECTRIC PARTS

Rev. 11 - 20/06/2011

SHELL ASSY

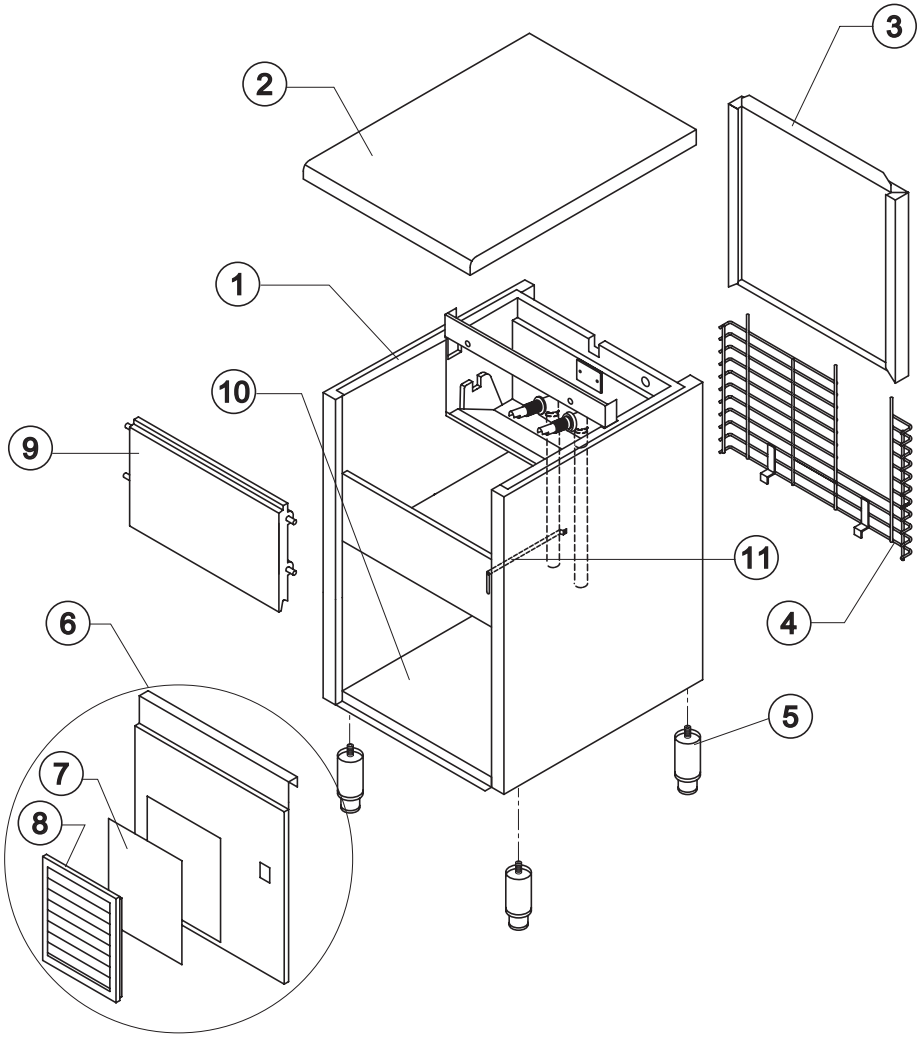

Ref.	Spare Description		Code
1	Foamed Cabinet Assy	See Table	-
2	Top Assembly		C22673
3	Rear Panel Assembly		C21184
4	Rear Grid		D12015
5	Adjustable Stainless Steel Foot		20613
6	Front Grid Panel		C22509
7*	Filtering Panel		18106
8	Frame + Grid & Filter		C10205
9	Door Assy		C10275
10	Base Plate		21280
11	Bulb-holder Pipe	Current Version	20521
11	Bulb-holder Pipe	Till s/n. 258692	20520

Ref. 1 - Foamed Cabinet Assy

Condensation	Code
Air	C11009A
Water	C11009W

Rev. 11 - 20/06/2011

COOLING SYSTEM

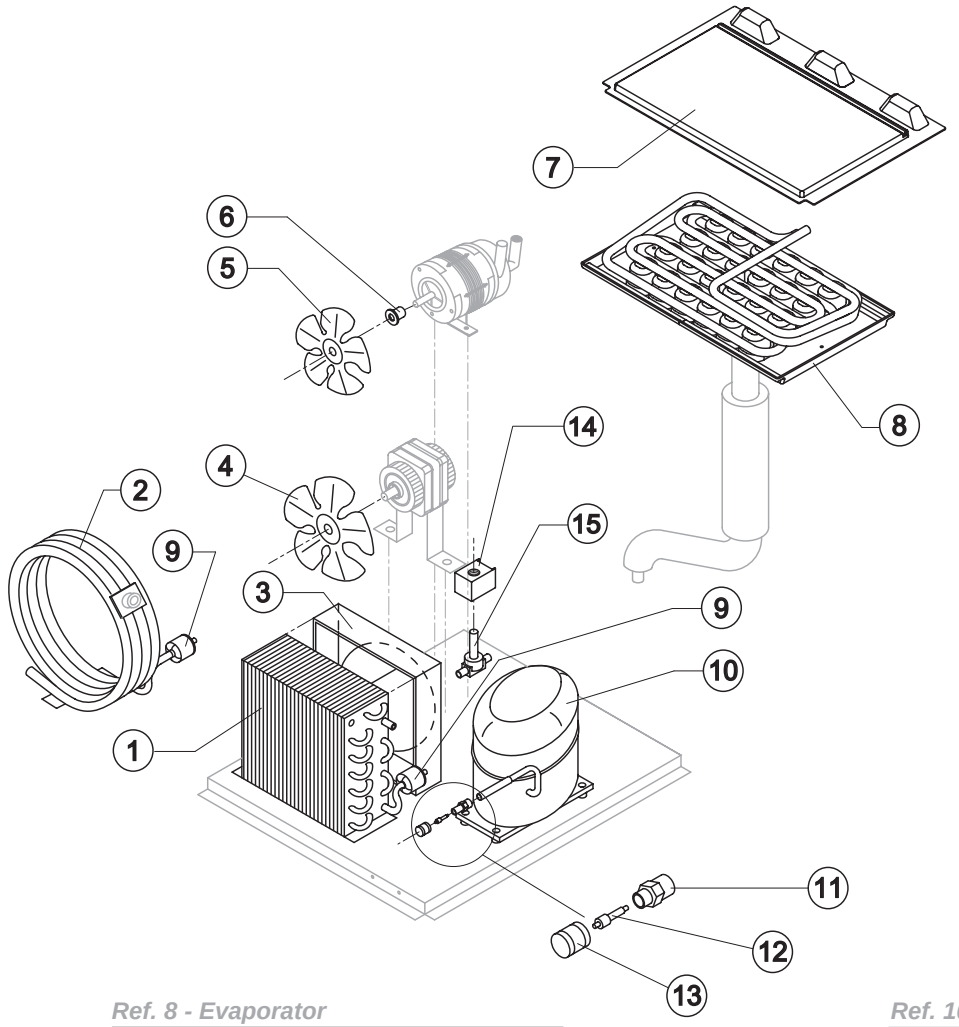

Common Parts

Ref.	Spare Description		Code
5	Sucking Fan		10213
6	Fan Fixing Hub		10014
7	Evaporator Cover Panel	Current Version	10448
7	Evaporator Cover Panel	Till s/n. 224658	10039
8	Evaporator	See Table	-
9*	Solid Core Drier		14089
10	Compressor	See Table	-
11	Vacuum-Charge Valve Body		14007
12*	Vacuum-Charge Valve Device		14005
13*	Vacuum-Charge Valve Plug		14006
14*	Hot Gas Valve Coil	See Table	-
15*	Hot Gas Valve Body		20410

Parts for Air-Cooled Version Only

Ref.	Spare Description	Code
1	Air Condenser	20264
3	Air Condenser Conveyor	10163
4	Sucking Fan	20031

Parts for Water-Cooled Version Only

Ref.	Spare Description		Code
2	Water Condenser		14034
4	Sucking Fan	Till s/n. 221034	10213

Ref. 8 - Evaporator

Kind of Cube	Code
18 g. (Standard)	D10047
33 g.	D10090
13 g.	D10418
42 g.	D10480

Ref. 10 - Compressor

Voltage	Code
T11	23875
T12	23504A
T13	23552
T19	23552

Ref. 14 - Hot Gas Valve Coil*

Voltage	Code
T11	23091
T12	23091
T13	23256
T19	23256

Rev. 11 - 20/06/2011

HYDRAULIC CIRCUIT

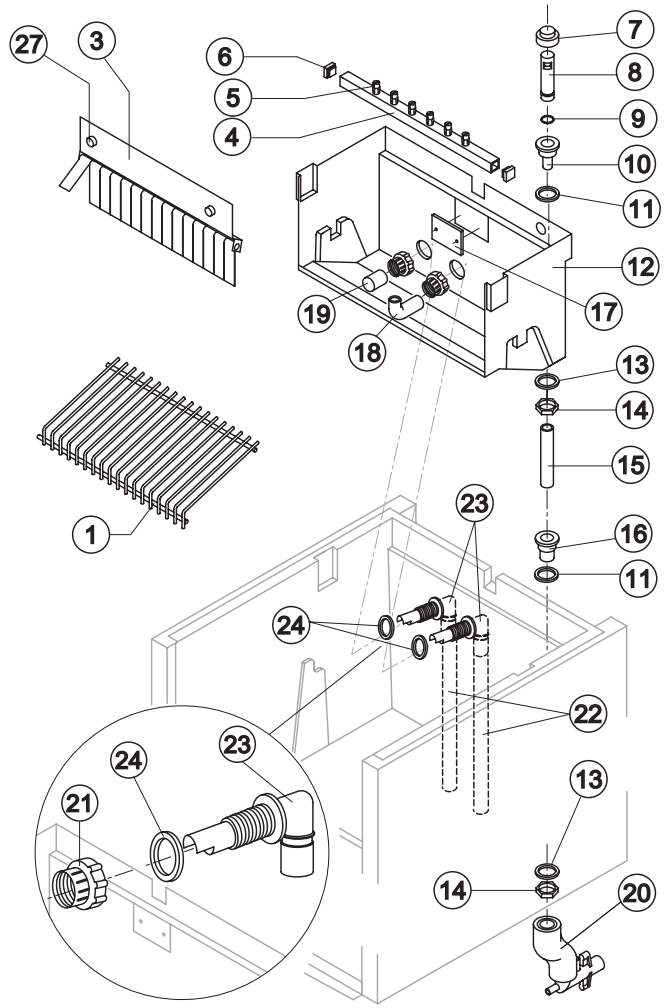

Common Parts

Ref.	Spare Description		Code
1	Ice Cubes Slide	See Table	-
3	Flags Support Assy		C22059
4*	Sprayers Bar Assembly	See Table	-
5	Sprayer		D20002
6	Sprayers Bar Plug		10012
7*	Overflow Cap		10305
8*	Overflow Pipe		10133
9*	OR Gasket for Overflow Pipe		20233
10	Overflow Pipe Nipple		10471
11	Silicone Gasket		13006
12	Inner Basin		10034
13	Semirigid Polyethylene Gasket		13007
14	Bin Discharge Nut		10096
15*	Overflow Pipe		13109
16	Water Outlet Nipple		10472
17	Slide Keep Plate	Till s/n. 227891	10009
18	Sprayers Feeding Pipe		13005
19*	Pump Suction Filter		20005
21	Fittings Locking Ring		10405
22	Pump Suction/Delivery Pipe		13140
23	Fitting of the Pump Suction/Delivery Pipes		10404
24	Gasket for Pump Suction/Delivery Pipes		13143
27	Fixing Screw		20009

Ref. 1 - Ice Cube Slide

Kind of Cube	Code
18 g. (Standard)	D12017
33 g.	D12031
13 g.	D12039
42 g.	D12071

Ref. 4* - Sprayers Bar Ass.

Kind of Cube	Code
18 g. (Standard)	C20058
33 g.	C20156
13 g.	C20190
42 g.	C20802

Parts for Air Cooled Version Only

Ref.	Spare Description	Code
20	Discharges Manifold	C10006

Parts for Water Cooled Version Only

Ref.	Spare Description	Code
20	Discharges Manifold	C26452

Rev. 11 - 20/06/2011

ELECTRIC PARTS

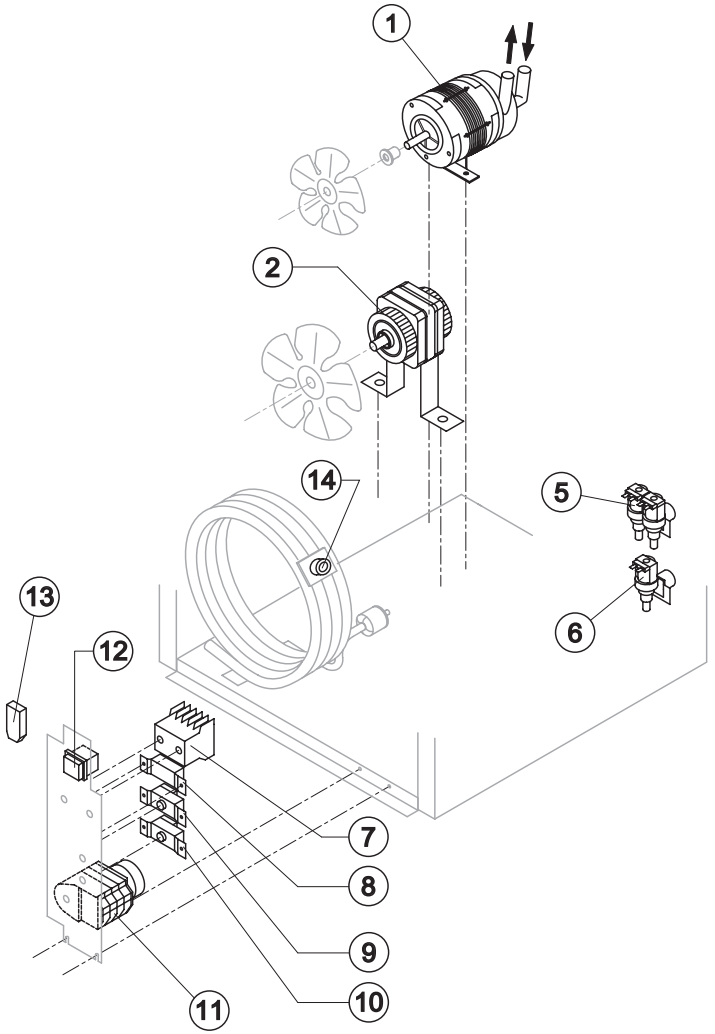

Rev. 11 - 20/06/2011

Common Parts

Ref.	Spare Description		Code
1*	Pump Assy	See Table	-
2*	Fan Motor	See Table	-
7	Contactor	Only T13 e T19	23595
8*	Condenser Pressure Switch	See Table	-
9*	Bin Thermostat		R23005
10*	Evaporator Themostat		R23591
11*	Timer	See Table	-
12*	Green Light Switch (On-Off)		23327

Parts for Air-Cooled Version Only

Ref.	Spare Description		Code
6*	1 Way- Water Inlet Valve	See Table	-
13	Anti Radio Interference Filter	Only T11	C23459

Parts for Water-Cooled Version Only

Ref.	Spare Description		Code
5*	2 Ways- Water Inlet Valve	See Table	-
13	Anti Radio Interference Filter	Only T11	C23457
14*	Safety Thermostat		C23114

Ref. 1* - Pump Assy

Voltage	Code
T11	C23377
T12	C23377
T13	C23663
T19	C23663

Ref. 2* - Fan motor

Tension	Air	Water Till s/n. 221034
T11	23067	23029
T12	23681	23029
T13	23621	23683
T19	23621	-

Ref. 5* - 2 Ways- Water inlet valve

Voltage	Cube 18g/13g	Cube 33g	Cube 42g
T11	23010	23010	23781
T12	23010	23781	23781
T13	23261	23758	23758
T19	23261	23758	23758

Ref. 6* - 1 Way - Water Inlet valve

Voltage	Cube 18g/13g	Cube 33g	Cube 42g
T11	23001	23001	23220
T12	23001	23220	23220
T13	23260	23281	23281
T19	23260	23281	23281

Ref. 8* - Cond. Pressure Switch

Voltage	Code
T11	23175
T12	23175
T13	23175
T19	23680

Ref. 11* - Timer

Voltage	18g Cube	33g Cube	13g Cube	42g Cube
T11	23222	23248	23247	23780
T12	23248	23780	23247	23780
T13	23259	23786	23258	23786
T19	23259	23786	23258	23786