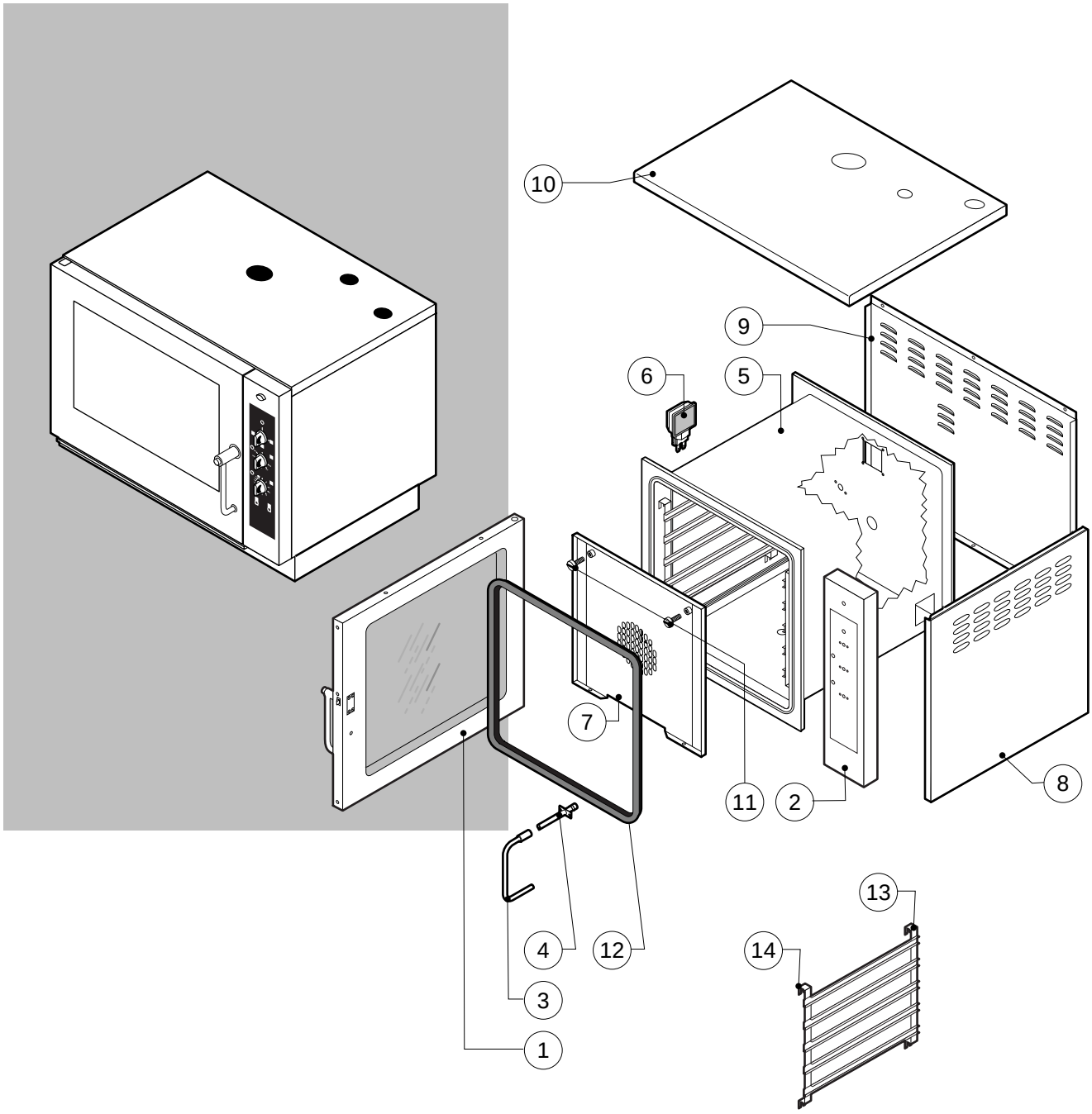

POS.	CODE	PIECES	DESCRIPTION
1	R18100120	1	DOOR ASSEMBLY
2	R18201110	1	CONTROL PANEL
3	R18200540	1	SPRITZER EXTENSION
4	R18201430	1	SPRITZER UNION
5	R18211200	1	COOKING CABINET ASSEMBLY
6	R65270510	1	LAMP COVER
7	R18402100	1	FAN GUARD PANEL ASSEMBLY
8	R18401760	2	SIDE PANEL
9	R18401770	1	REAR PANEL
10	R18419380	1	COVER PANEL
11	R58006400	2	FAN GUARD FASTENING SCREW
12	R70044350	1	FRONT GASKET
13	R17200420	2	REMOVABLE RACK
14	R17200330	2	REMOVABLE RACK

POS.	CODE	PIECES	DESCRIPTION

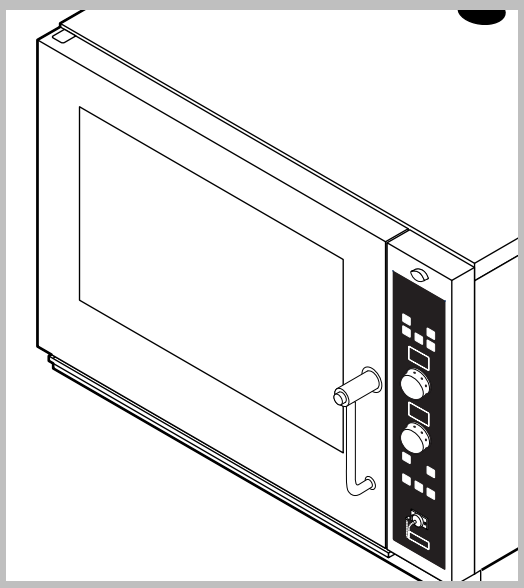

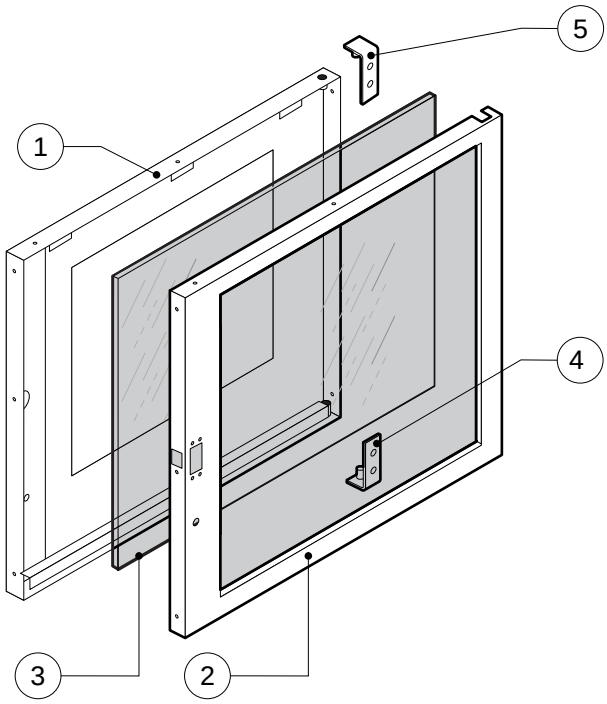

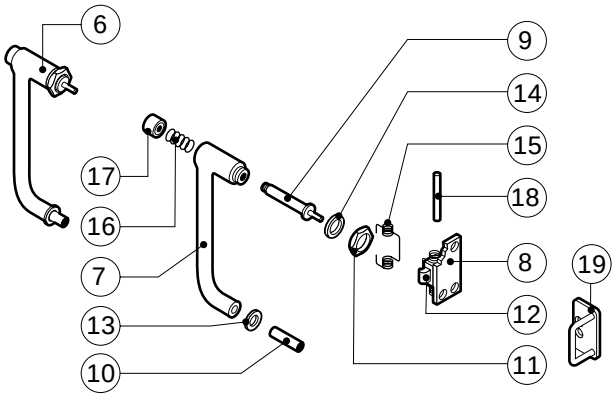

POS.	CODE	PIECES	DESCRIPTION
1	R18200960	1	DOOR
2	R18402370	1	INNER DOOR PANEL
3	R71201340	1	FRONTAL DOOR GLASS
4	R18201260	1	LOWER DOOR HINGE
5	R18201270	1	UPPER DOOR HINGE
6	R69015000	1	DOOR HANDLE ASSEMBLY
7	R09200230	1	DOOR HANDLE
8	R10100110	1	PRONG FLANGE
9	R58003240	1	DOOR HANDLE BUTTON ROD
10	R58004270	1	DOOR HANDLE SPACER
11	R58004830	1	RING NUT M18x1
12	R58005050	1	DOOR HANDLE PRONG
13	R58005340	1	DOOR HANDLE LOWER INSULATION WASHER
14	R58005350	1	DOOR HANDLE UPPER INSULATION WASHER
15	R61620012	1	DOOR HANDLE CATCH SPRING
16	R61620041	1	DOOR HANDLE BUTTON SPRING
17	R69031190	1	DOOR HANDLE PUSH BUTTON
18	R58002160	1	DOOR HANDLE PRONG PIN
19	R18200940	1	DOOR HANDLE PRONG COUPLER

POS.	CODE	PIECES	DESCRIPTION

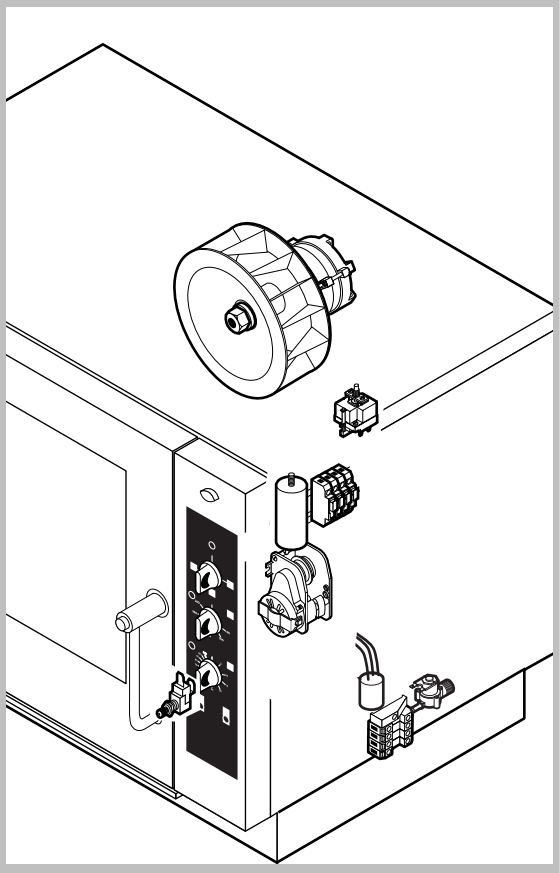

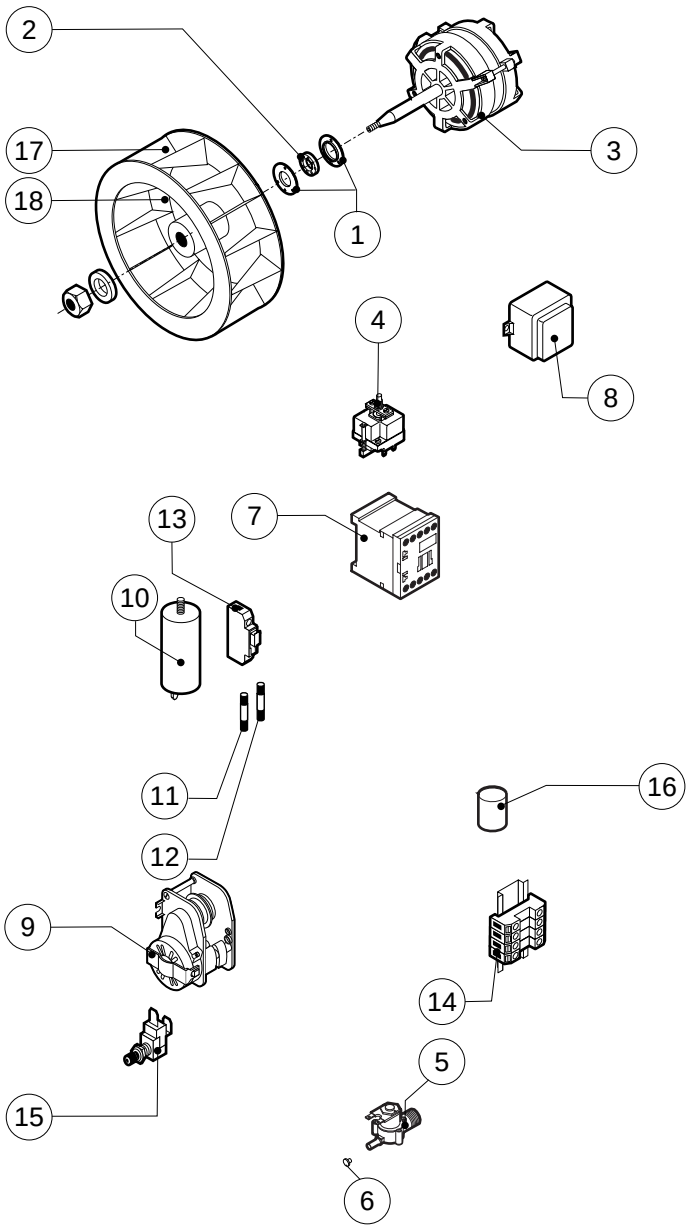

POS.	CODE	PIECES	DESCRIPTION
1	R58005500	1	MOTOR GASKET BRASS FLANGE
2	R70020020	1	MOTOR GASKET
3	*R65041000	1	MOTOR 200W
4	R65070350	1	CHAMBER SAFETY THERMOSTAT
5	R65110200	1	SOLENOID VALVE 220V 50HZ
6	R65110500	1	10 LT/H WATER FLOW REDUCER
7	*R65140700	2	CONTACTOR DIL M9-01 4KW-20A
8	R65180420	1	TRANSFORMER 20VA
9	R65090190	1	REVERSING SWITCH 8'
10	*R65190180	1	CAPACITOR 10 ¤F
11	R65200200	1	FUSE 2A
12	R65200086	1	FUSE 0.125A (T)
13	R65210020	2	FUSE CARRIER
14	R65220090	1	TERMINAL BOARD
15	R65260540	1	DOOR SWITCH
16	*R65280200	3	INTERFERENCE SUPPRESSOR
17	*R75400410	1	FAN Ø 180x77/12 50HZ P.D.
18	R75400430	1	FAN Ø 180x77/8 60HZ P.D.

POS.	CODE	PIECES	DESCRIPTION

*COMPONENT SUBMITTED TO CHANGEMENTS CAUSED BY TENSION DIFFERENT FROM THE STANDARD (3N AC400V 50HZ)

EDIZIONE 0908

BPE 044-054 M tav. C

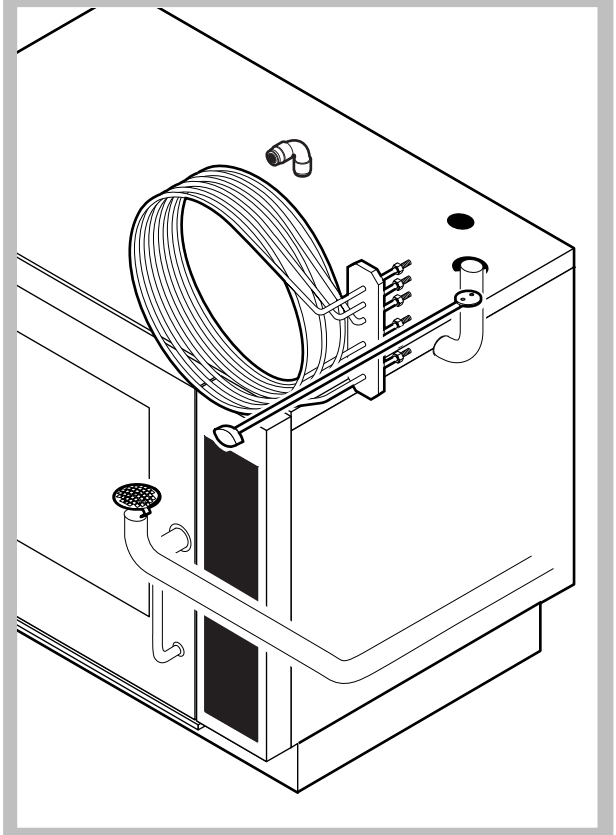

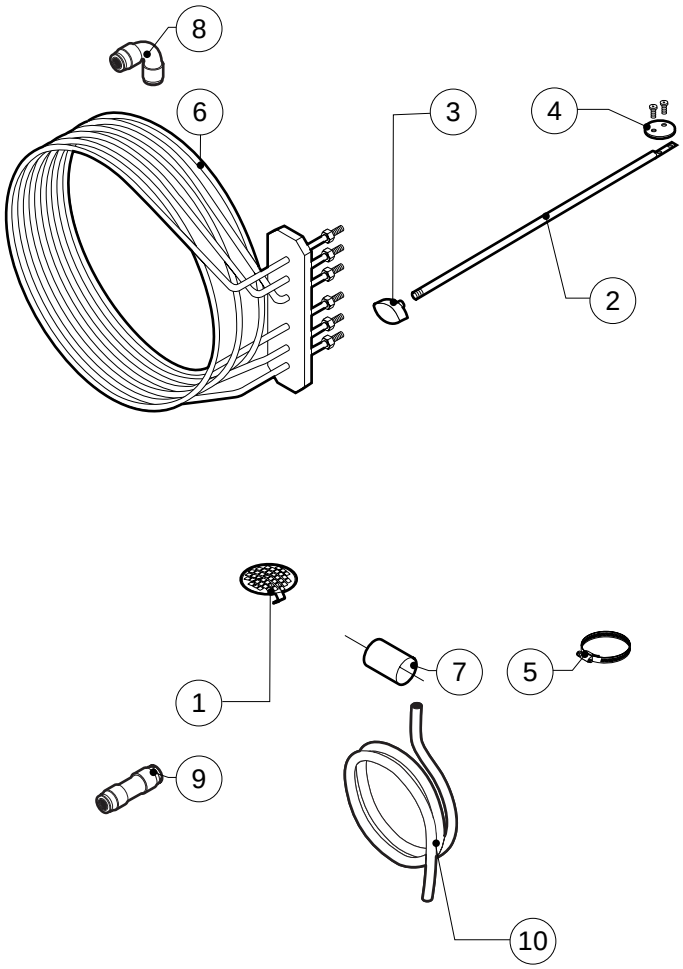

POS.	CODE	PIECES	DESCRIPTION
1	R09201820	1	DRAIN FILTER
2	R58006884	1	CHAMBER VENT ROD
3	R69010410	1	STEAM OUTLET KNOB
4	R18400940	1	CHAMBER VENT PLATE
5	R61630081	2	METAL CLAMPS 20-32/9
6	R65011530	1	CHAMBER HEATING ELEMENT 6000W
7	R70060090	1	SILICON COUPLING Ø 25
8	R62090478	3	ELBOW MIDDLING PIPE FITTING D.10
9	R62090458	1	STRAIGHT MIDDLING PIPE FITTING D.10
10	R70070070	1	PE D.10 MM X7 WATER FLEXIBLE PIPE (1 MT LONG)

POS.	CODE	PIECES	DESCRIPTION

*COMPONENT SUBMITTED TO CHANGEMENTS CAUSED BY TENSION DIFFERENT FROM THE STANDARD (3N AC400V 50HZ)

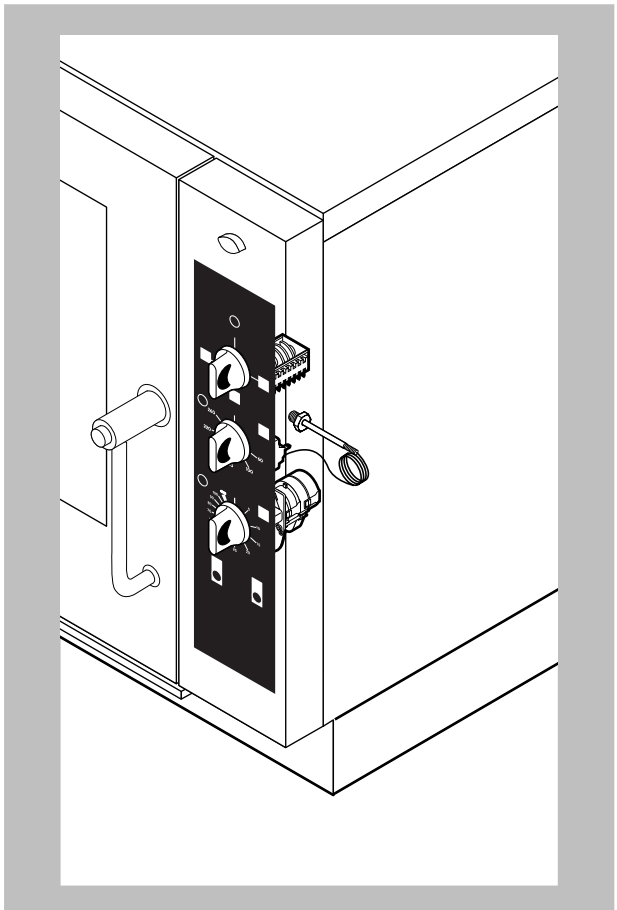

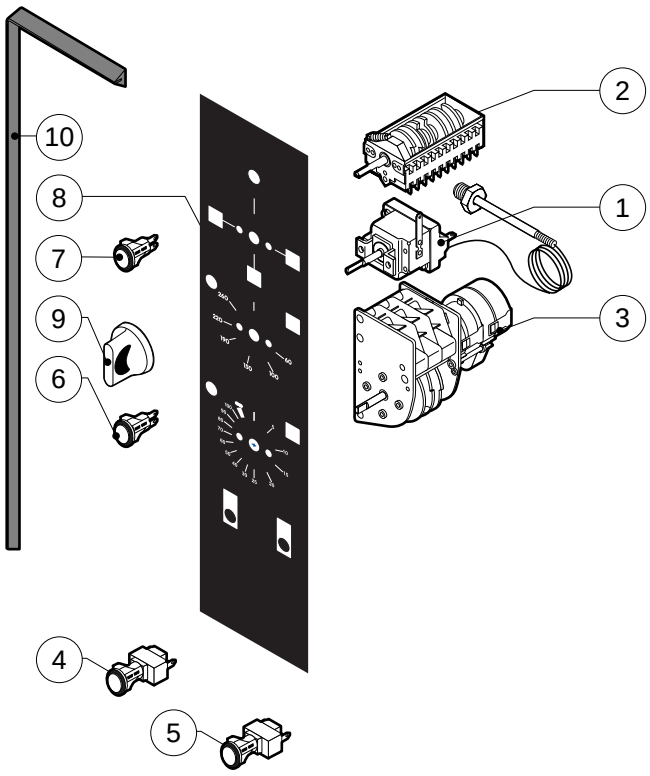

POS.	CODE	PIECES	DESCRIPTION
1	R65070360	1	CABINET THERMOSTAT 0¤/300¤C
2	R65080010	1	MAIN SELECTOR SWITCH
3	R65090020	1	TIMER
4	R65260600	1	SWITCH
5	R65260610	1	HUMIDIFIER PUSH BUTTON
6	R65270150	2	ORANGE INDICATING LIGHT
7	R65270160	1	GREEN INDICATING LIGHT
8	R67013570	1	PLATE "M"
9	R69030170	3	KNOB
10	R70044250	1	CONTROL PANEL GASKET

POS.	CODE	PIECES	DESCRIPTION