# LIST OF THE EXPLODED VIEWS




## SHELL ASSY

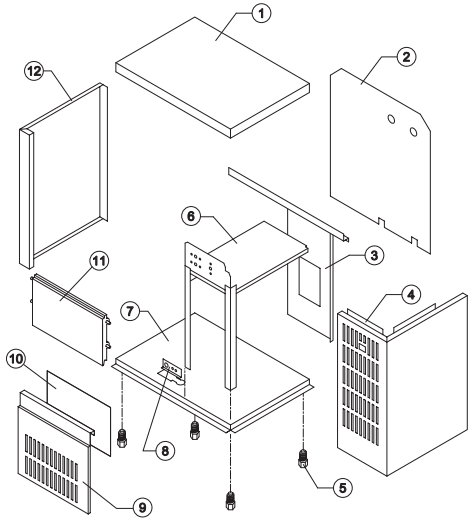


## COOLING SYSTEM

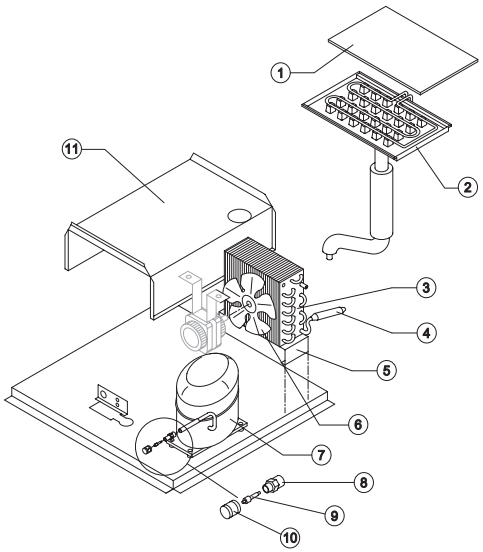


## HYDRAULIC CIRCUIT

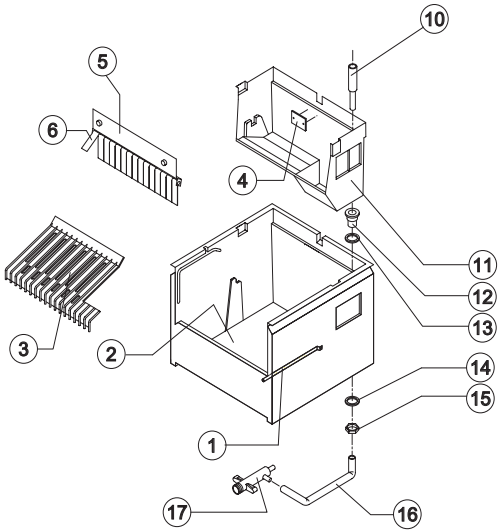


## SPRAYER PUMP

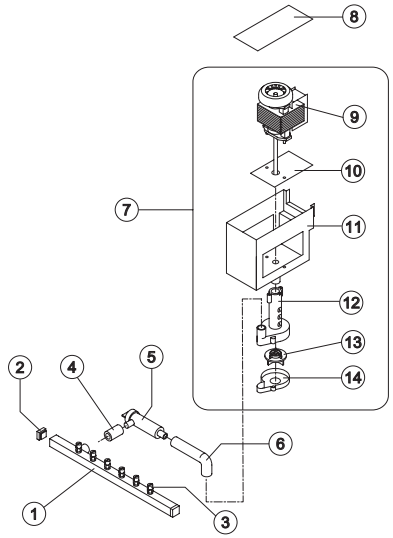


## ELECTRIC PARTS

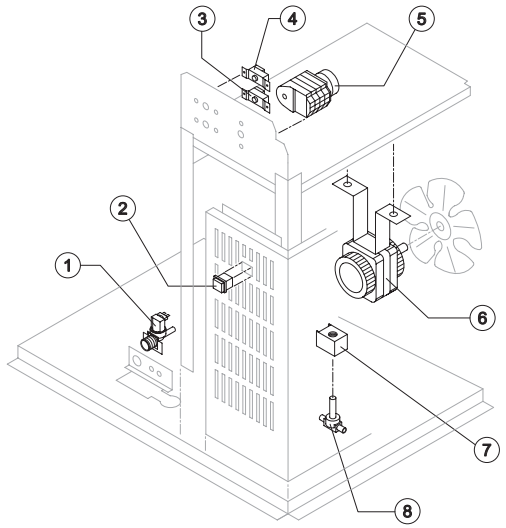


Rev. 3 - 20/10/2003

# SHELL ASSY

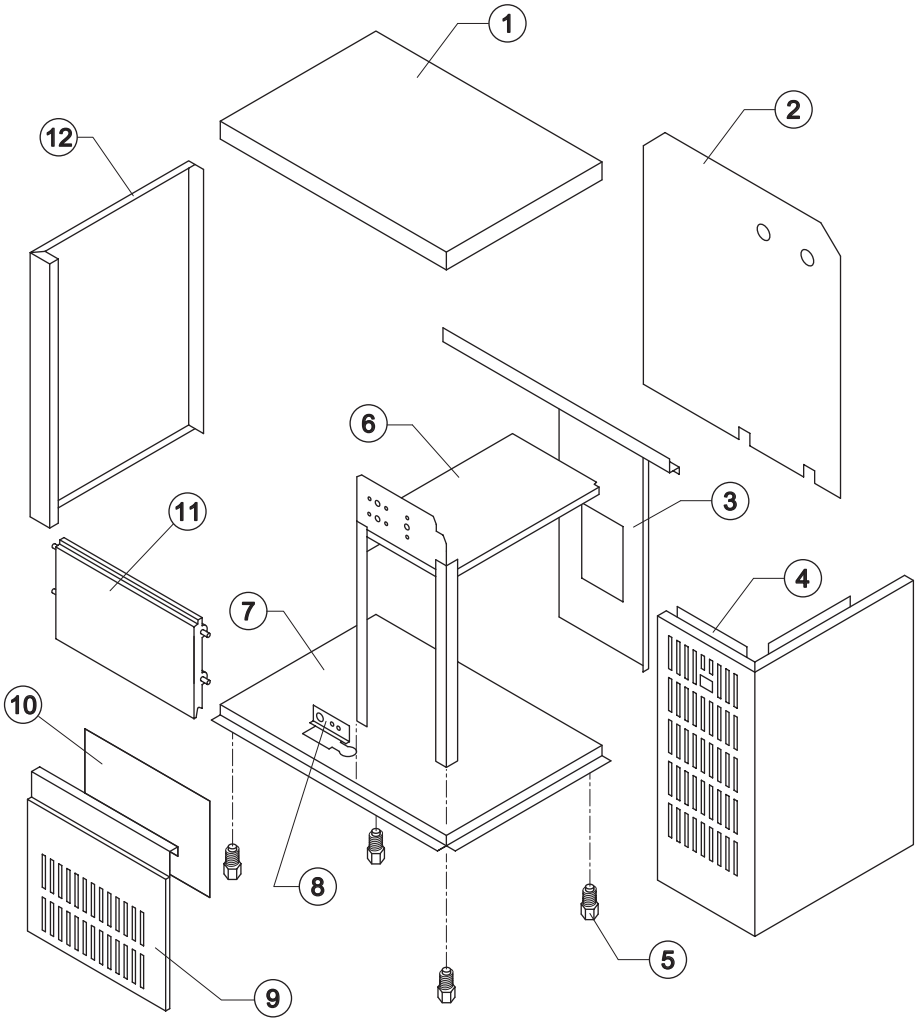


| Ref. | Spare Description | Code |
|---|---|---|
| 1 | Top Assembly | C22199 |
| 2 | Back Panel | 21161 |
| 3 | Back Frame | 21156 |
| 4 | Right & Front Panel (Fan Side) | 22308 |
| 5 | Foot | 10017 |
| 6 | Fan Motor & Electrical Components Support Plate | 22301 |
| 7 | Base Plate | 21105 |
| 8 | Support (Watervalve & Discharge) | 21149 |
| 9 | Front Panel | 22307 |
| 10 | Filtering Panel | 18074 |
| 11 | Blue Door | 10081 |
| 12 | Left Side | 22309 |

Rev. 3 - 20/10/2003

# COOLING SYSTEM

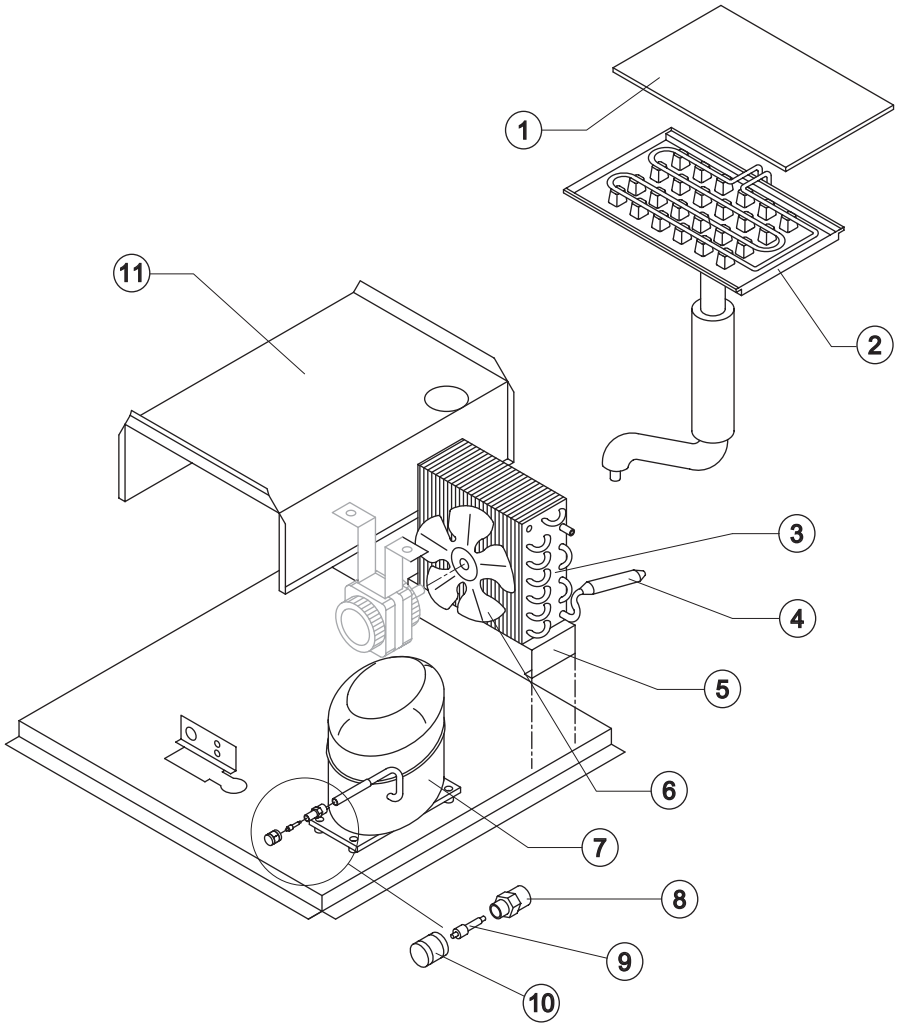


| Ref. | Spare Description | | Code |
|---|---|---|---|
| 1 | Evaporator Cover | | 10076 |
| 2 | Evaporator | | D10079 |
| 3 | Air Condenser | | 20094 |
| 4 | Molecular Drier | | 14009 |
| 5 | Air Condenser Support | | 21155 |
| 6 | Suction Impeller | | 20095 |
| 7 | Compressor | See Table | - |
| 8 | Vacuum-Charge Valve Body | | 14007 |
| 9 | Vacuum-Charge Valve Device | | 14005 |
| 10 | Vacuum-Charge Valve Plug | | 14006 |
| 11 | Bin Support Saddle | | 21154 |

*Ref. 7 - Compressor*

| Tension | Code |
|---|---|
| 220/240V 50 Hz | 23436 |
| 220/230V 60 Hz | 23494 |
| 110/115V 60 Hz | 23446 |

# HYDRAULIC CIRCUIT

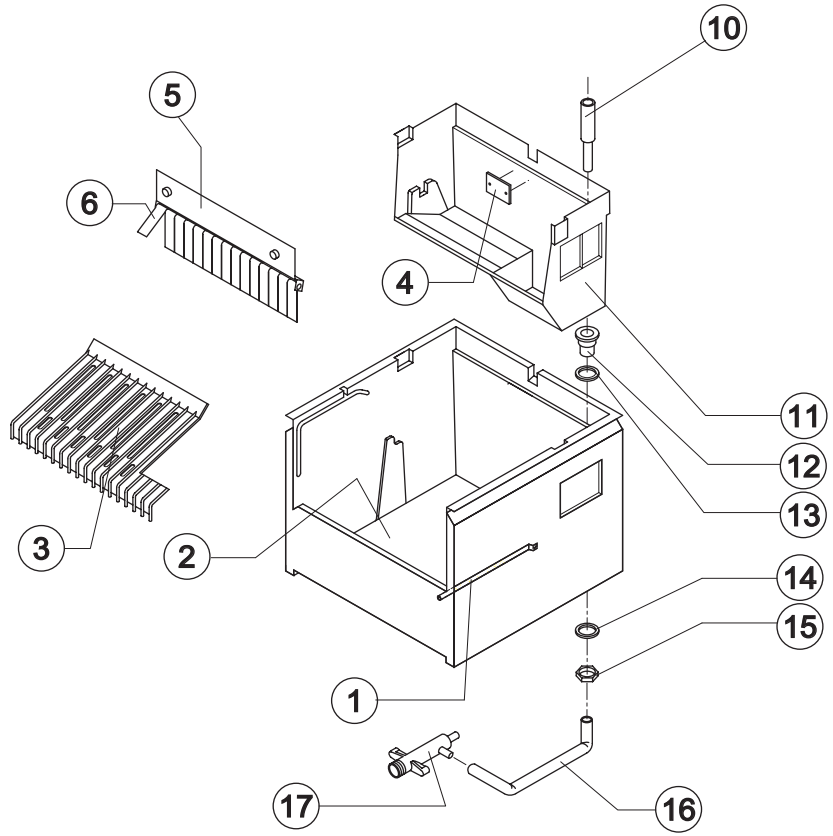


| Ref. | Spare Description | Code |
|---|---|---|
| 1 | Bulbe Thermostat Tube | 20520 |
| 2 | Foamed Basin | 11016/E |
| 3 | Ice Cubes Slide | 10136 |
| 4 | Slide Keep Plate | 10142 |
| 5 | Flags Support Assy | C22106 |
| 6 | Flag | 10005 |
| 10 | Overflow Pipe | 13028 |
| 11 | Inner Basin | 10064 |
| 12 | Plastic Nipple Water Outlet | 10007 |
| 13 | Silicone Gasket | 13006 |
| 14 | Semirigid Polyethylene Gasket | 13007 |
| 15 | Bin Discharge Nut | 10096 |
| 16 | Water Discharge Pipe | 13065 |
| 17 | Discharge Manifold | 10006 |

Rev. 3 - 20/10/2003

# SPRAYER PUMP

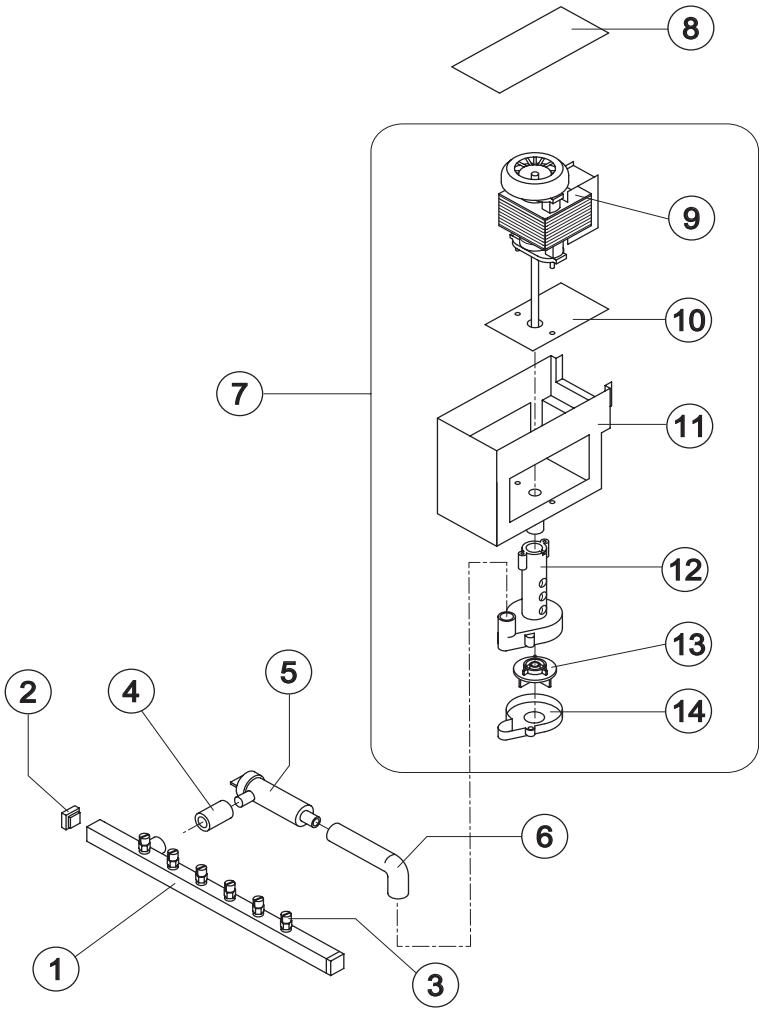


| Ref. | Spare Description | | Code |
|---|---|---|---|
| 1 | Sprayers Bar Assembly | | C20147 |
| 2 | Sprayers Bar Plug | | 10012 |
| 3 | Sprayer | | D20002 |
| 4 | Filter-Sprayers Bar Connection Pipe | | 13056 |
| 5 | Pump Filter | | 10139 |
| 6 | Pump-Filter Connection Pipe | | 13055 |
| 7 | Pump Assy | See Table | - |
| 8 | Pump Cover | | 22096 |
| 9 | Pump Motor | See Table | - |
| 10 | Heat Dissipator | | 22430 |
| 11 | Pump Motor Container | | 10073 |
| 12 | Pump Body | | 10065 |
| 13 | Pump Impeller | | 10066 |
| 14 | Diffuser | | 10067 |

*Ref. 7 - Pump Assy*

| Tension | Code |
|---|---|
| 220/240V 50 Hz | C23076 |
| 220/230V 60 Hz | C23270 |
| 110/115V 60 Hz | C23271 |

*Ref. 9 - Pump Motor*

| Tension | Code |
|---|---|
| 220/240V 50 Hz | 23073 |
| 220/230V 60 Hz | 23187 |
| 110/115V 60 Hz | 23188 |

Rev. 3 - 20/10/2003

# ELECTRIC PARTS

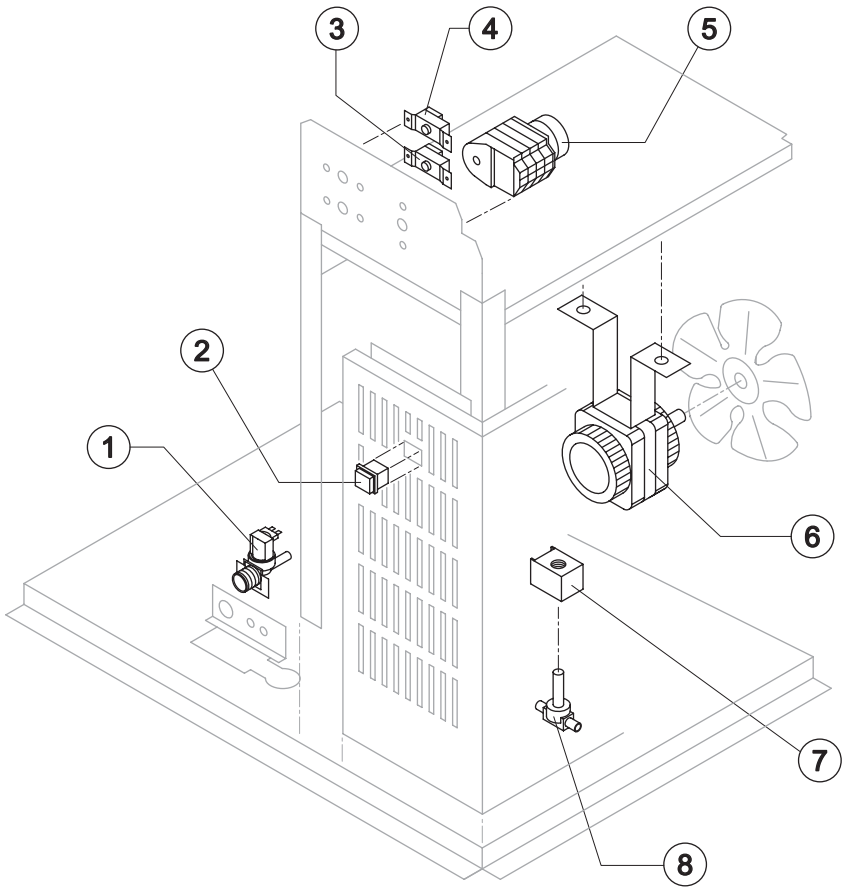


| Ref. | Spare Description | | Code |
|---|---|---|---|
| 1 | Inlet Watervalve 1 Way | See Table | - |
| 2 | Green Light Switch | | 23327 |
| 3 | Evaporator Thermostat | | 23591 |
| 4 | Bin Thermostat | | 23005 |
| 5 | Timer | See Table | - |
| 6 | Fan Motor | See Table | - |
| 7 | Hot Gas Coil | See Table | - |
| 8 | Hot Gas Valve Body | | 20410 |

*Ref. 1 - Inlet Watervalve 1 Way*

| Tension | Code |
|---|---|
| 220/240V 50 Hz | 23300 |
| 220/230V 60 Hz | 23300 |
| 110/115V 60 Hz | 23415 |

*Ref. 5 - Timer*

| Tension | Code |
|---|---|
| 220/240V 50 Hz | 23247 |
| 220/230V 60 Hz | 23247 |
| 110/115V 60 Hz | 23258 |

*Ref. 6 - Fan Motor*

| Tension | Code |
|---|---|
| 220/240V 50 Hz | 23029 |
| 220/230V 60 Hz | 23029 |
| 110/115V 60 Hz | 23683 |

*Ref. 7 - Hot Gas Coil*

| Tension | Code |
|---|---|
| 220/240V 50 Hz | 23091 |
| 220/230V 60 Hz | 23091 |
| 110/115V 60 Hz | 23256 |

Rev. 3 - 20/10/2003