CB 184

LIST OF THE EXPLODED VIEWS



SHELL - ABS

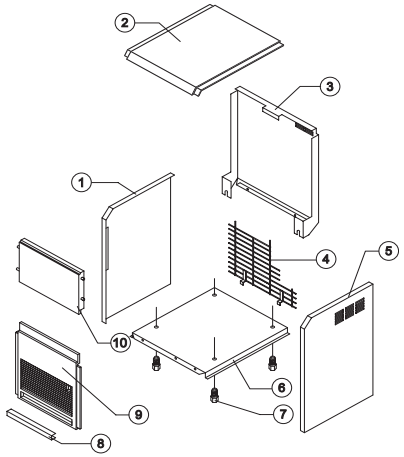

SHELL - STAINLESS STEEL

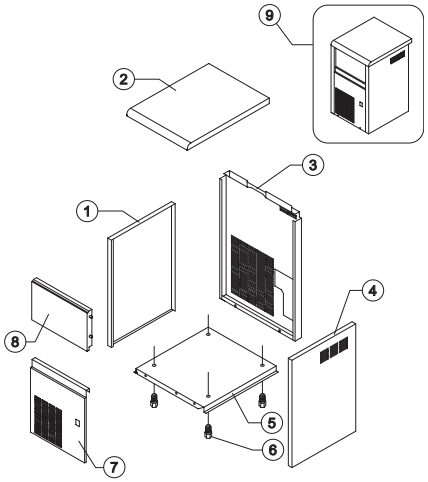

COOLING SYSTEM

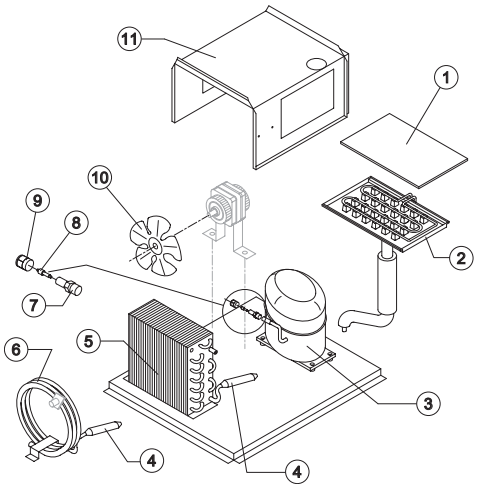

HYDRAULIC CIRCUIT

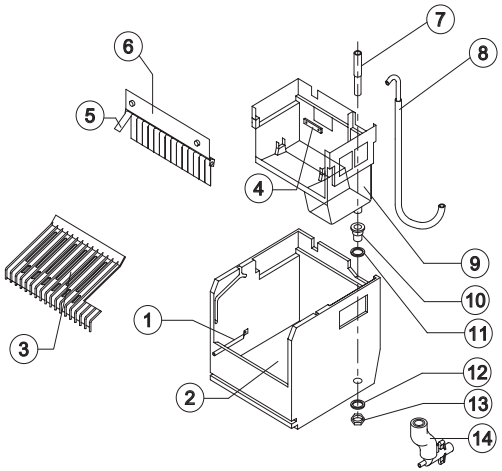

SPRAYER PUMP

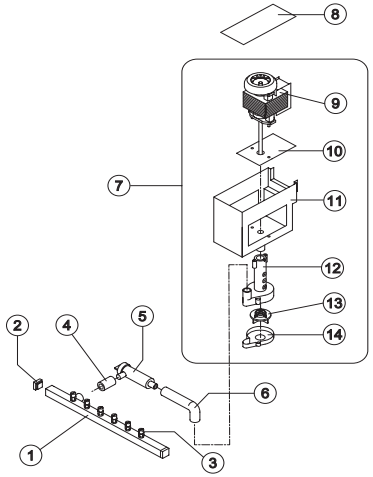

ELECTRIC PARTS

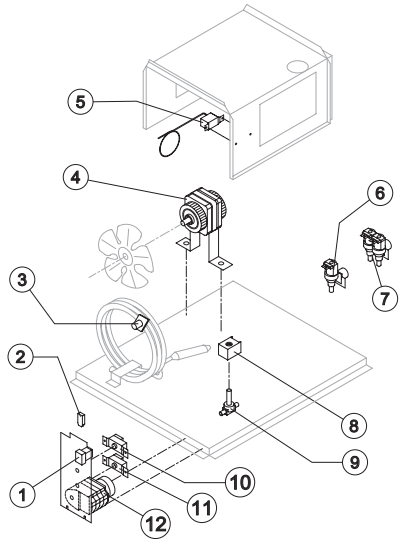

Rev. 4 - 20/10/2003

SHELL - ABS

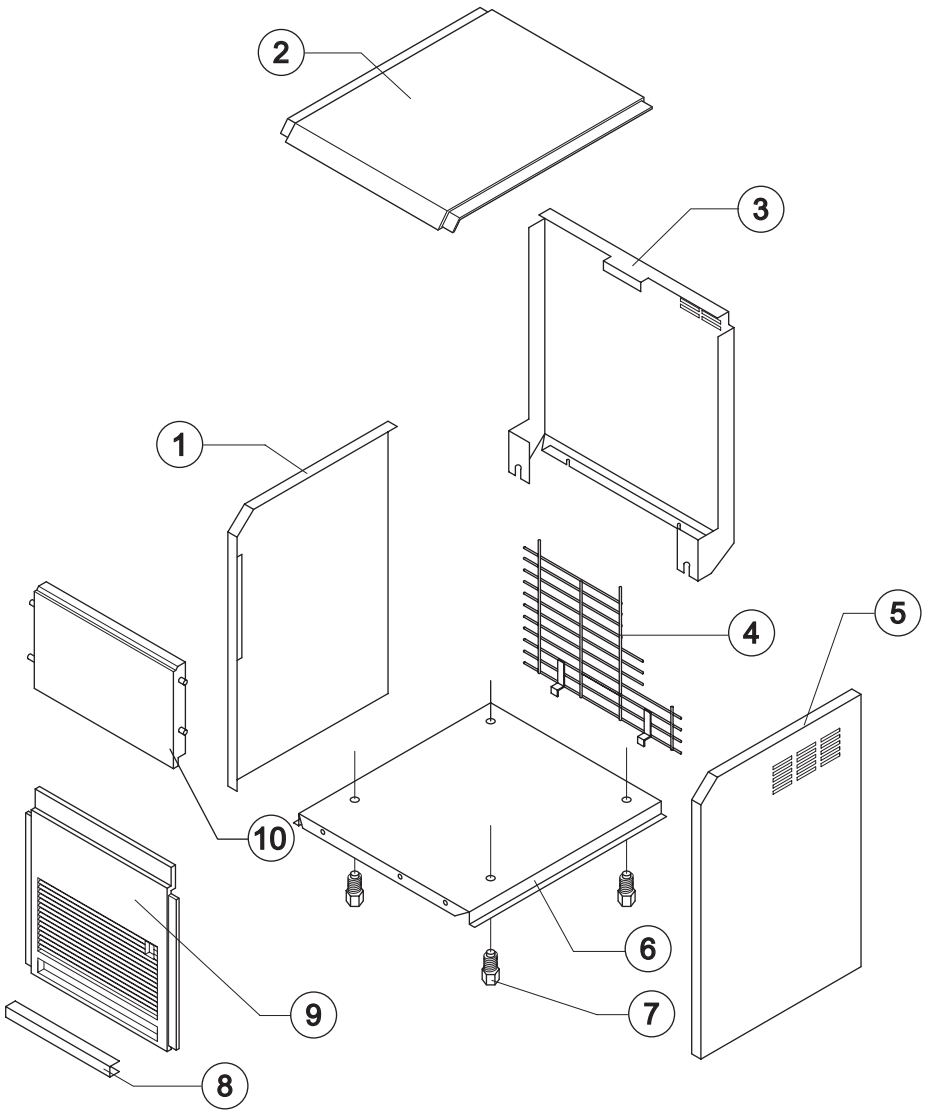

Panels - Blue Version

Ref.	Spare Description	Code
1	Left Side	10061
2	Top	10062
5	Right Side	10060
8	Screws Cover	10069
9	Front Grid Panel	10063
10	Door	10081

Panels - Grey Version

Ref.	Spare Description	Code
1	Left Side	10105
2	Top	10102
5	Right Side	10099
8	Screws Cover	10098
9	Front Grid Panel	10101
10	Door	10103

Common Finishes

Ref.	Spare Description	Code
3	Back Panel	21064
4	Back Grid	D12028
6	Base Plate	21062
7	Foot	10017

Rev. 4 - 20/10/2003

SHELL - STAINLESS STEEL

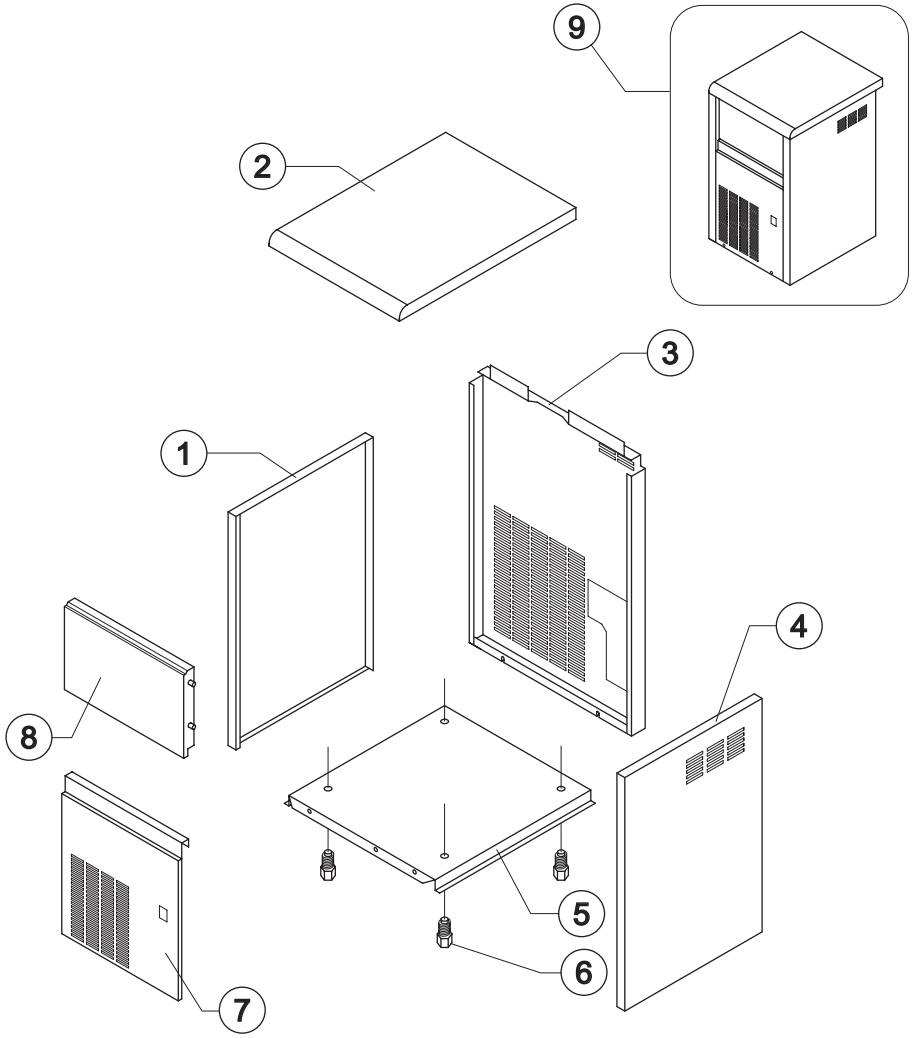

Version With Modular Panels

Ref.	Spare Description	Code
1	Left Panel	22713
2	Top	C22714
3	Back Panel	21235
4	Right Panel	22712
7	Front Grid Panel	22700

Version With Single Shell

Ref.	Spare Description	Code
3	Back Panel	21194
9	Single Shell	22505

The above version has been used till the s/n 102225. It has been then replaced by the version with modular panels.

Common Finishes

Ref.	Spare Description	Code
5	Base Plate	21062
6	Foot	10017
8	Dark Grey Door	10277

Rev. 4 - 20/10/2003

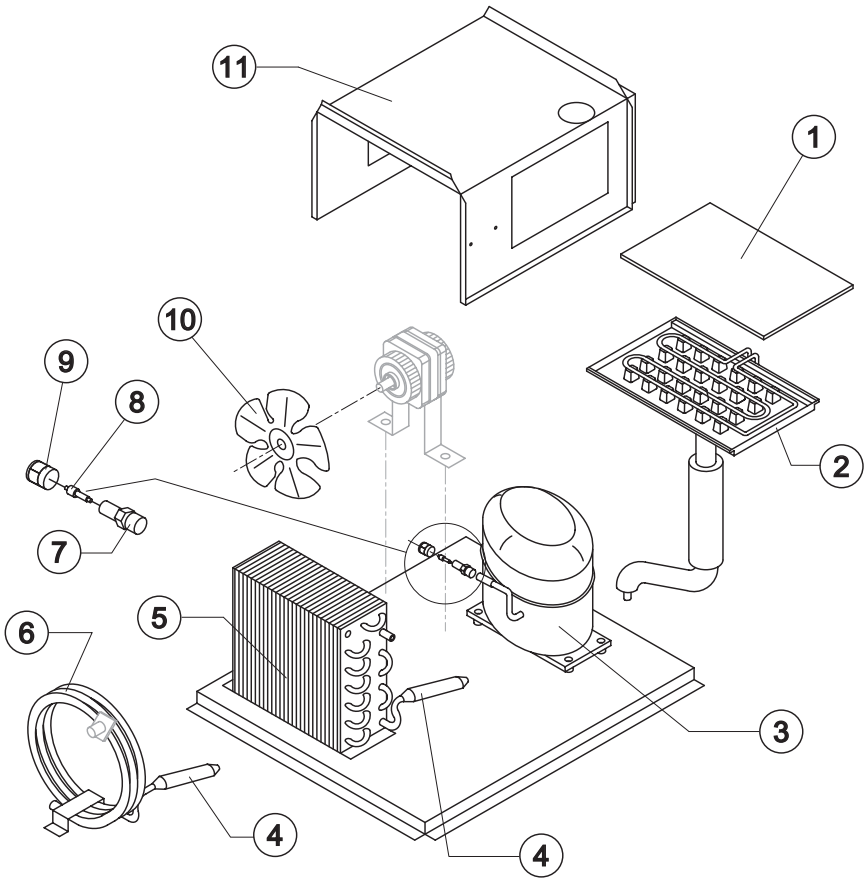

Common Parts

Ref.	Spare Description		Code
1	Evaporator Cover		10076
2	Evaporator		D10079
3	Compressor	See Table	-
4	Molecular Drier		14009
7	Vacuum-Charge Valve Body		14007
8	Vacuum-Charge Valve Device		14005
9	Vacuum-Charge Valve Plug		14006
11	Bin Support Saddle		22095

Parts for Air-Cooled Version Only

Ref.	Spare Description	Code
5	Air Condenser	20094
10	Suction Fan	20095

Parts for Water-Cooled Version Only

Ref.	Spare Description	Code
6	Water Condenser	14348
10	Suction Fan	10213

Ref. 3 - Compressor

Tension	Code
220/240V 50 Hz	23436
220/230V 60 Hz	23494
110/115V 60 Hz	23446

HYDRAULIC CIRCUIT

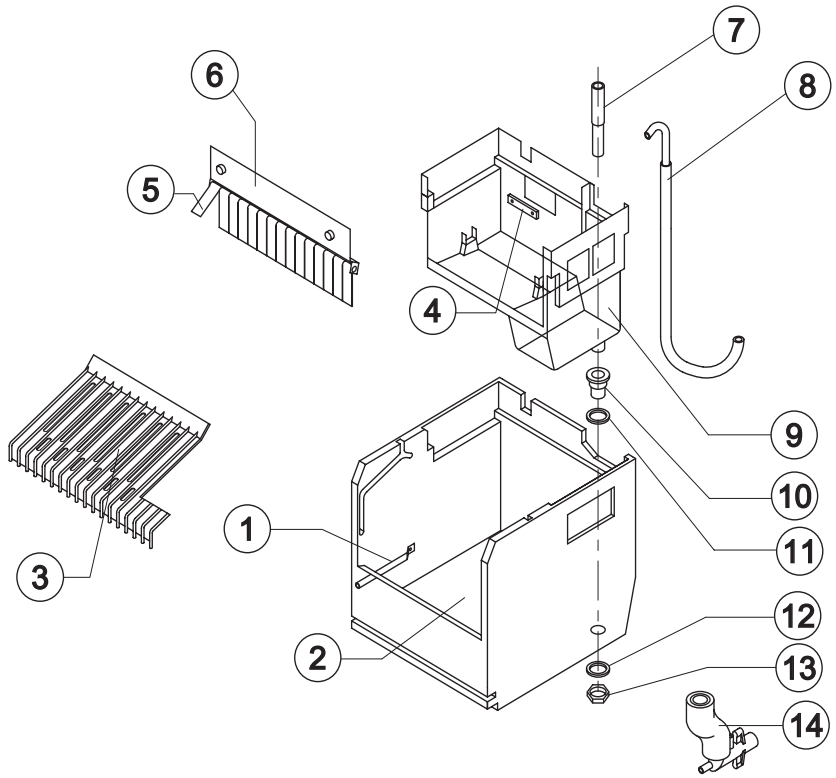

Common Parts

Ref.	Spare Description	Code
1	Bulbe Thermostat Tube	20520
2	Foamed Bin	11016/E
3	Ice Cubes Slide	10136
4	Slide Keep Plate	10142
5	Flag	10005
6	Flags Support Assy	C22106
7	Overflow Pipe	13028
8	Evaporator's Feeding Pipe Assy	C20535
9	Inner Basin	10064
10	Plastic Nipple Water Outlet	10007
11	Silicone Gasket	13006
12	Semirigid Polyethylene Gasket	13007
13	Bin Discharge Nut	10096

Parts for Air-Cooled Version Only

Ref.	Spare Description	Code
14	Discharges Manifold	C10006

Parts for Water-Cooled Version Only

Ref.	Spare Description	Code
14	Discharges Manifold	C26452

SPRAYER PUMP

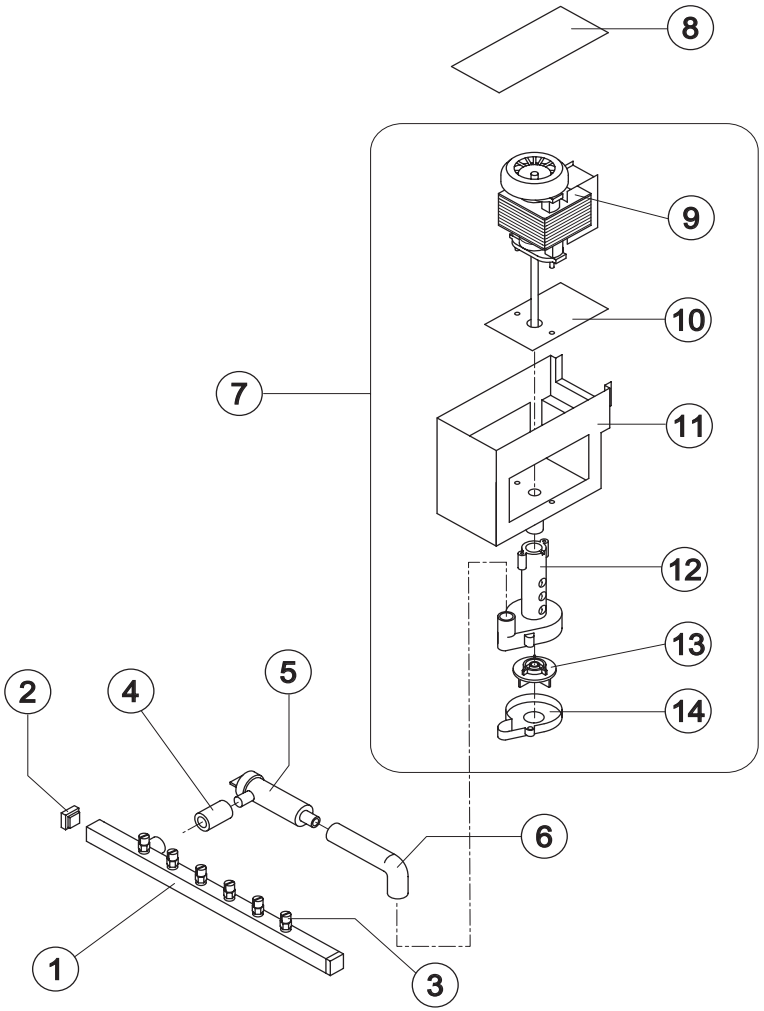

Ref.	Spare Description		Code
1	Sprayers Bar Assembly		C20147
2	Sprayers Bar Plug		10012
3	Sprayer		D20002
4	Filter-Sprayers Bar Connection Pipe		13056
5	Pump Filter		10139
6	Pump-Filter Connection Pipe		13055
7	Pump Assy	See Table	-
8	Pump Cover		22096
9	Pump Motor	See Table	-
10	Heat Dissipator		22430
11	Pump Motor Container		10073
12	Pump Body		10065
13	Pump Impeller		10066
14	Diffuser		10067

Ref. 7 - Pump Assy

Tension	Code
220/240V 50 Hz	C23076
220/230V 60 Hz	C23270
110/115V 60 Hz	C23271

Ref. 9 - Pump Motor

Tension	Code
220/240V 50 Hz	23073
220/230V 60 Hz	23187
110/115V 60 Hz	23188

Rev. 4 - 20/10/2003

ELECTRIC PARTS

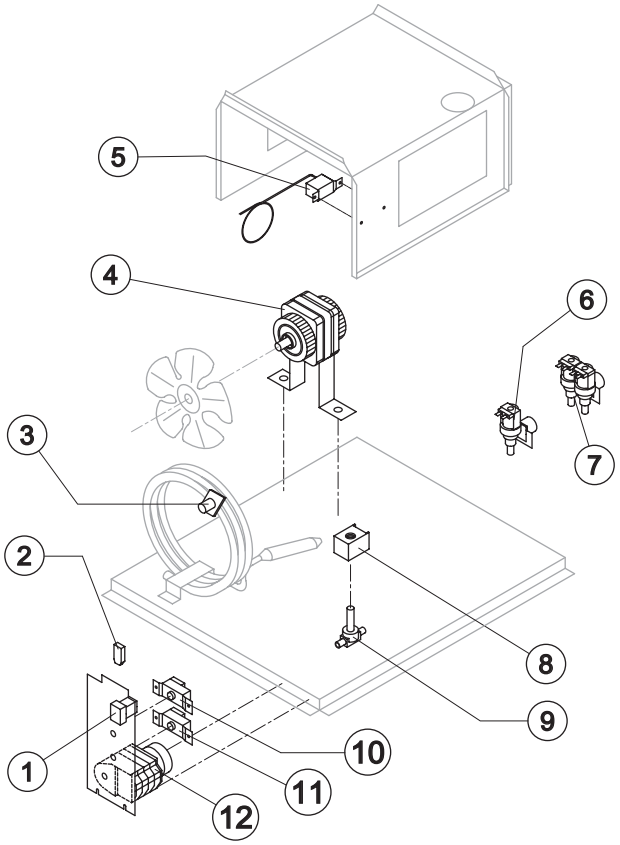

Common Parts

Ref.	Spare Description		Code
1	Switch On-Off (Green Color)		23078
4	Fan Motor	See Table	-
8	Hot Gas Coil	See Table	-
9	Hot Gas Valve Body		20410
10	Bin Thermostat		23005
11	Evaporator Thermostat		23591
12	Timer	See Table	-

Parts for Air-Cooled Version Only

Ref.	Spare Description		Code
6	Inlet Water Valve 1 Way	See Table	-

Parts for Water-Cooled Version Only

Ref.	Spare Description		Code
2	Anti Radio Interference Filter	Only 220V 50 Hz	23457
3	Safety Thermostat		C23114
5	Condenser Pressure Switch		23175
7	Inlet Water Valve 2 Ways	See Table	-

Ref. 4 - Fan Motor

Tension	Code
220/240V 50 Hz	23029
220/230V 60 Hz	23029
110/115V 60 Hz	23683

Ref. 6 - Inlet W. Valve 1 Way

Tension	Code
220/240V 50 Hz	23497
220/230V 60 Hz	23497
110/115V 60 Hz	23499

Ref. 7 - Inlet W. Valve 2 Ways

Tension	Code
220/240V 50 Hz	23498
220/230V 60 Hz	23498
110/115V 60 Hz	23500

Ref. 8 - Hot Gas Coil

Tension	Code
220/240V 50 Hz	23091
220/230V 60 Hz	23091
110/115V 60 Hz	23256

Ref. 12 - Timer

Tension	Code
220/240V 50 Hz	23247
220/230V 60 Hz	23247
110/115V 60 Hz	23258

Rev. 4 - 20/10/2003