LIST OF THE EXPLODED VIEWS



SHELL ASSY

COOLING SYSTEM

HYDRAULIC CIRCUIT

ELECTRIC PARTS

Rev. 5 - 21/07/2005

SHELL ASSY

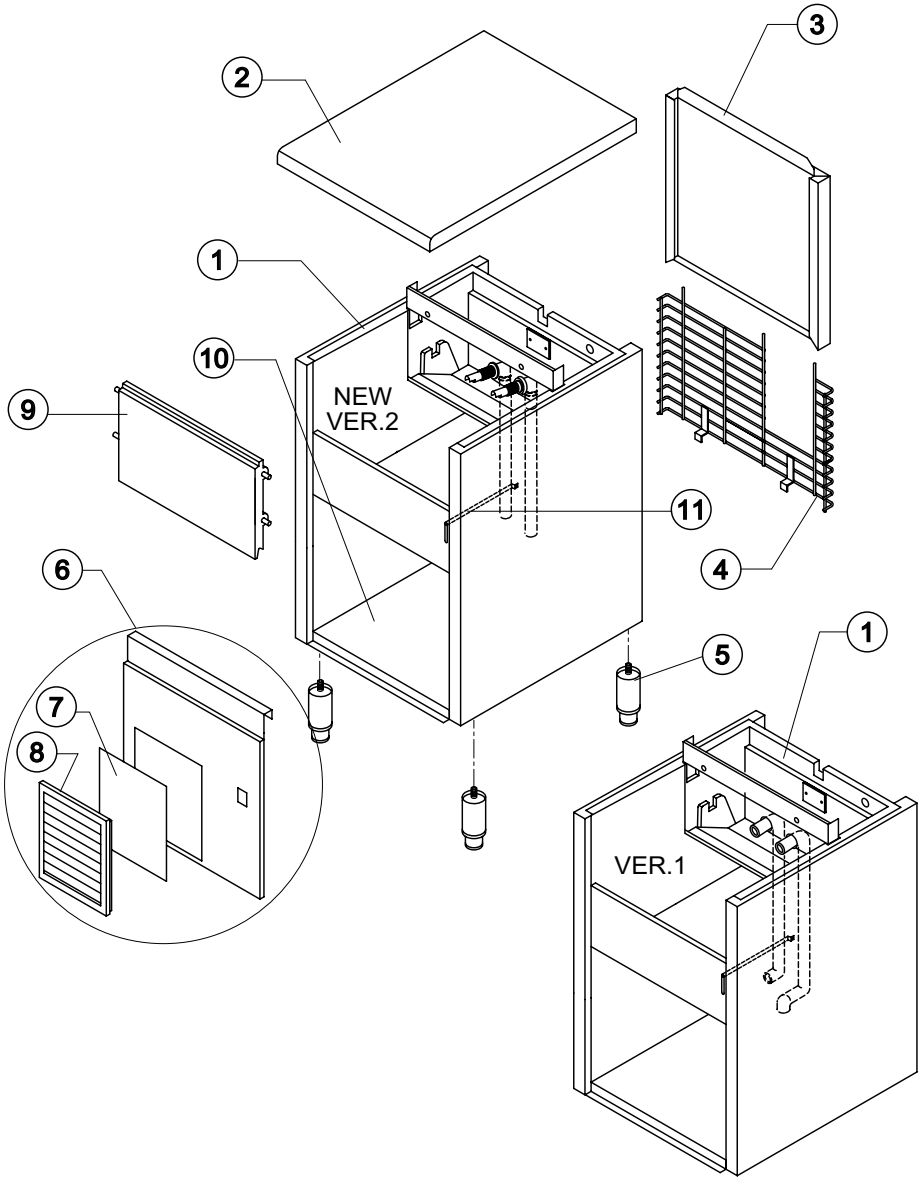

Ref.	Spare Description		Code
1	Foamed Cabinet Assy	See Table	-
2	Top Assembly		C22688
3	Rear Panel Assembly		C21209
4	Rear Grid		D12021
5	Adjustable Stainless Steel Foot	Current Version	20613
5	ABS Foot	Till s/n. 142534	10040
6	Front Grid Panel		C22564
7	Filtering Panel		18106
8	Frame with Grid & Filter		C10205
9	Door Assy		C10275
10	Base Plate	Current Version	21281
10	Base Plate	Till s/n. 142534	C21210
11	Bulbe-holder Pipe		20521

Ref. 1 - Foamed Cabinet Assy

Code	Condensation	Note
C11086A	Air	Version 2
C11086W	Water	Version 2
C11086/E		Version 1

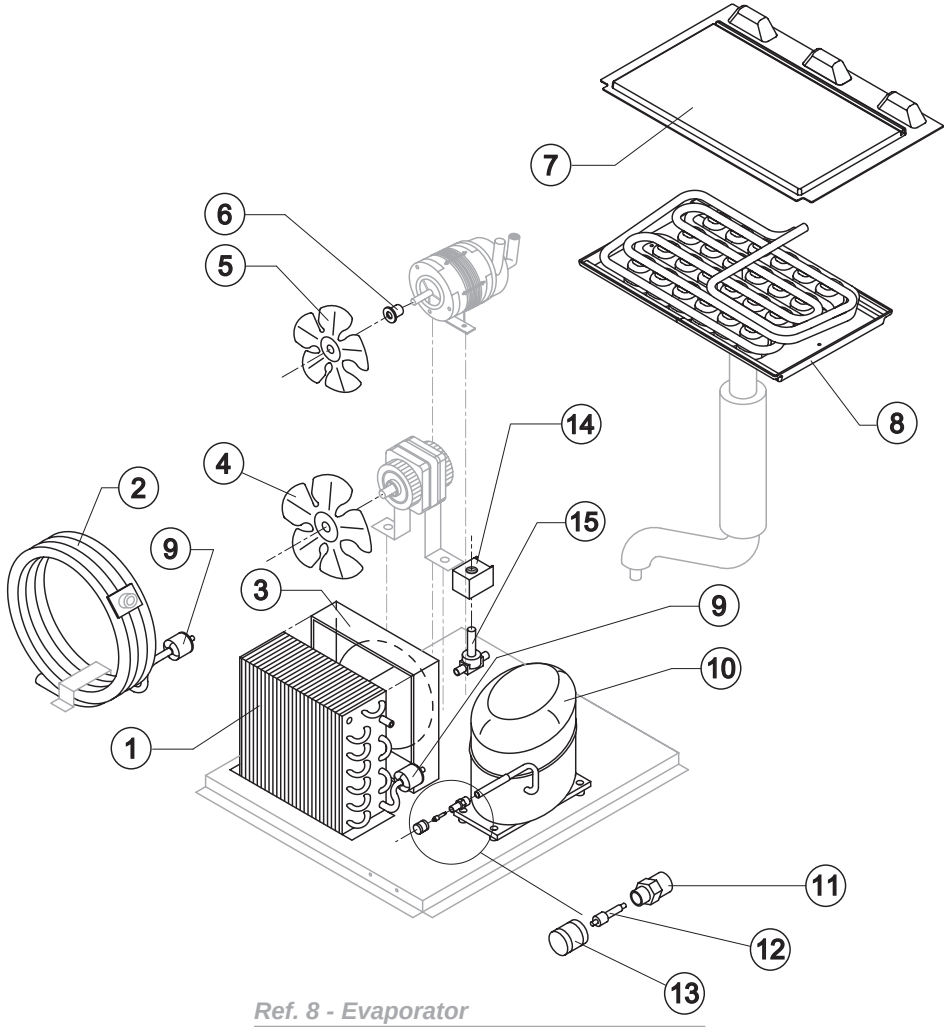

Common Parts

Ref.	Spare Description		Code
5	Sucking Fan		10213
6	Fan Fixing Hub		10014
7	Evaporator Cover Panel	Current Version	10450
7	Evaporator Cover Panel	Till s/n. 224687	10058
8	Evaporator	See Table	-
9	Solid Core Drier		14089
10	Compressor	See Table	-
11	Vacuum-Charge Valve Body		14007
12	Vacuum-Charge Valve Device		14005
13	Vacuum-Charge Valve Plug		14006
14	Hot Gas Valve Coil	See Table	-
15	Hot Gas Valve Body		20409

Parts for Air-Cooled Version Only

Ref.	Spare Description	Code
1	Air Condenser	20264
3	Air Condenser Conveyor	10163
4	Sucking Fan	20031

Parts for Water-Cooled Version Only

Ref.	Spare Description		Code
2	Water Condenser		14034
4	Sucking Fan	Till s/n. 219960	10213

Ref. 8 - Evaporator

Kind of Cube	Code
18 g. (Standard)	D10214
33 g.	D10092
13 g.	D10126
42 g.	D10477

Ref. 10 - Compressor

Tension	Code
220/240V 50 Hz	23440
220/230V 60 Hz	23465
110/115V 60 Hz	23554

Ref. 14 - Hot Gas Valve Coil

Tension	Code
220/240V 50 Hz	23091
220/230V 60 Hz	23091
110/115V 60 Hz	23256

HYDRAULIC CIRCUIT

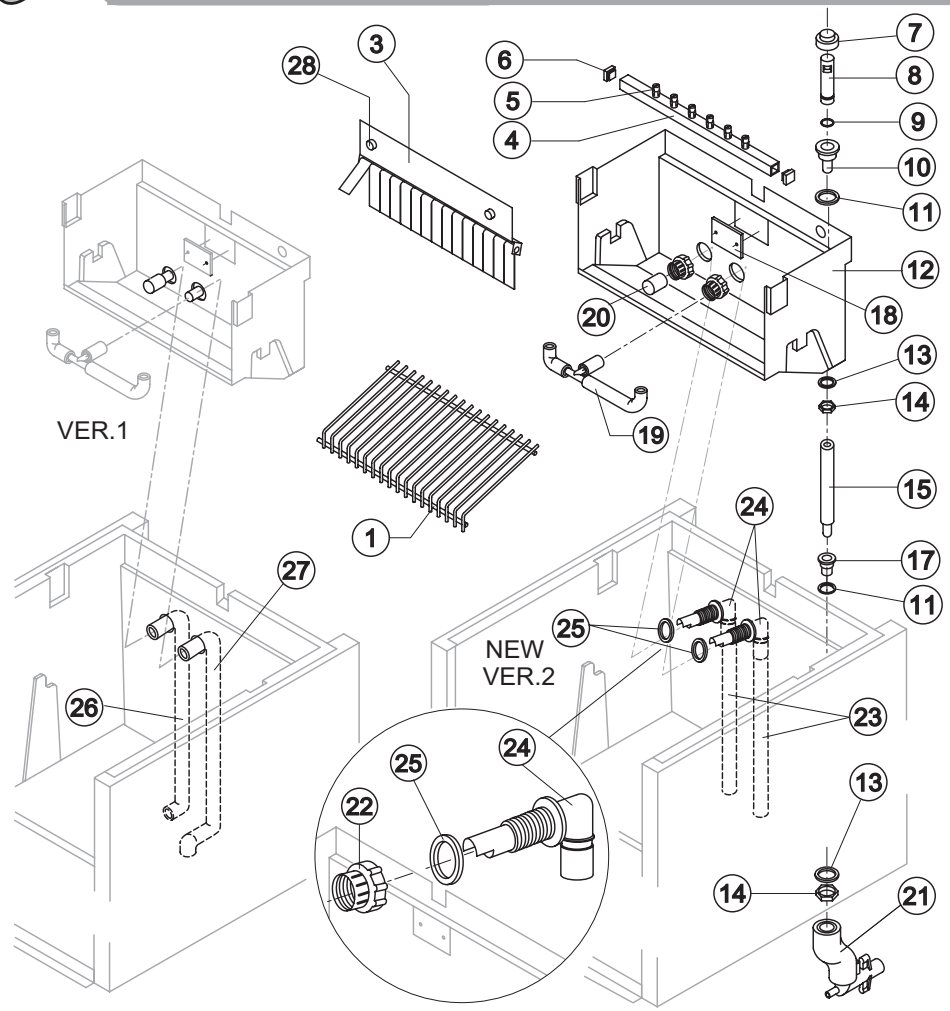

Rev. 5 - 21/07/2005

Common Parts

Ref.	Spare Description		Code
1	Ice Cubes Slide	See Table	-
3	Flags Support Assy		C22134
4	Sprayers Bar Assembly	See Table	-
5	Sprayer		D20002
6	Sprayers Bar Plug		10012
7	Overflow Cap		10305
8	Overflow Pipe		10133
9	OR Gasket for Overflow Pipe		20233
10	Overflow Pipe Nipple		10471
11	Silicone Gasket		13006
12	Inner Basin		10055
13	Semirigid Polyethylene Gasket		13007
14	Bin Discharge Nut		10096
15	Overflow Pipe Assembly		13155
17	Water Outlet Nipple		10472
18	Slide Keep Plate	Till s/n. 233769	10009
19	Sprayers Bar Pipe Connection Assy		C13036
20	Pump Suction Filter		20005
22	Fitting Locking Ring	Version 2	10405
23	Pump Suction/Delivery Pipe	Version 2	13142
24	Fitting of the Pump Suction/Delivery Pipes	Version 2	10404
25	Gasket for Pump Suction/Delivery Pipes	Version 2	13143
26	Pump Suction Pipe	Version 1	13096
27	Pump Delivery Pipe	Version 1	13095
28	Fixing Screw		20009

Ref. 1 - Ice Cube Slide

Kind of Cube	Code
18 g. (Standard)	D12022
33 g.	D12033
13 g.	D12040
42 g.	D12033

Ref. 4 - Sprayers Bar Ass.

Kind of Cube	Code
18 g. (Standard)	C20144
33 g.	C20157
13 g.	C20200
42 g.	C20157

Parts for Air-Cooled Version Only

Ref.	Spare Description	Code
21	Discharges Manifold	C10006

Parts for Water-Cooled Version Only

Ref.	Spare Description	Code
21	Discharges Manifold	C26452

ELECTRIC PARTS

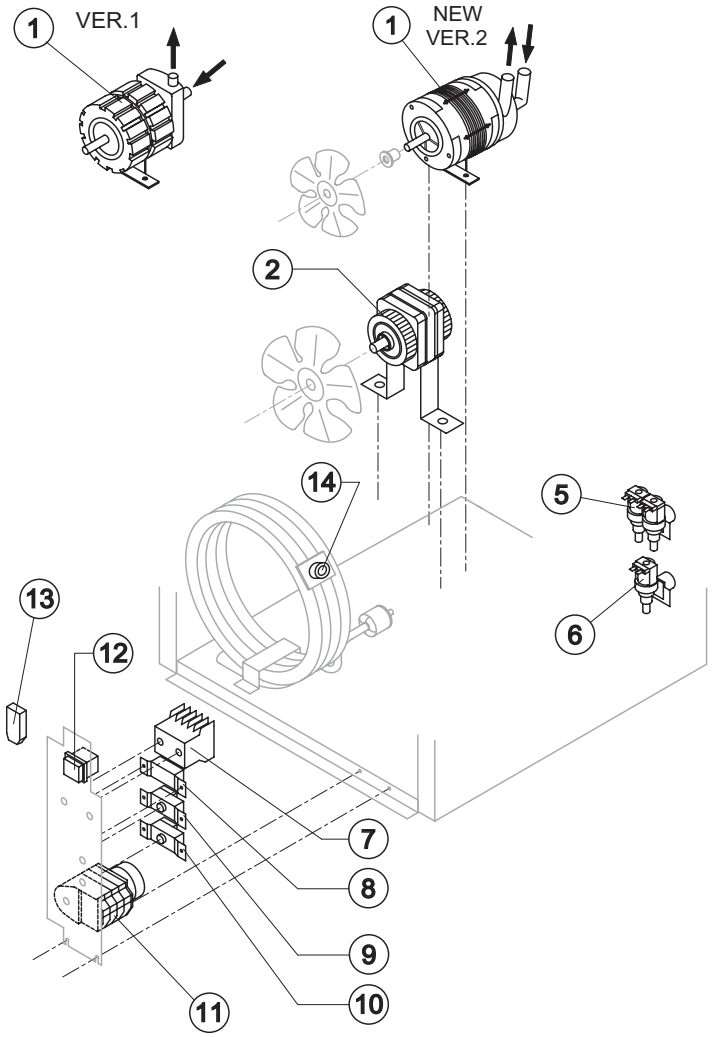

Common Parts

Ref.	Spare Description		Code
1	Pump	See Table	-
2	Fan Motor	See Table	-
7	Contactor	Only 110V 60 Hz	23595
8	Condenser Pressure Switch		23175
9	Bin Thermostat		R23005
10	Evaporator Thermostat		R23591
11	Timer	See Table	-
12	Green Light Switch (On-Off)		23327

Parts for Air-Cooled Version Only

Ref.	Spare Description		Code
6	1 Way- Water Inlet Valve	See Table	-
13	Anti Radio Interference Filter	Only 220V 50 Hz	C23459

Parts for Water-Cooled Version Only

Ref.	Spare Description		Code
5	2 Ways- Water Inlet Valve	See Table	-
13	Anti Radio Interference Filter	Only 220V 50 Hz	C23457
14	Safety Thermostat		C23114

Ref. 1 - Pump

Tension	Version 1	Version 2
220/240V 50 Hz	23068	23462
220/230V 60 Hz	23068	23462
110/115V 60 Hz	23264	23663

Ref. 2 - Fan Motor

Tension	Air	Water Till s/n. 219960
220/240V 50 Hz	23067	23029
220/230V 60 Hz	23681	23029
110/115V 60 Hz	23621	23683

Ref. 5 - 2 Ways- Water Inlet Valve

Tension	18g/13g Cube	33g Cube	42g Cube
220/240V 50 Hz	23157	23157	23157
220/230V 60 Hz	23157	23157	23157
110/115V 60 Hz	23282	23788	23788

Ref. 6 - 1 Way- Water Inlet Valve

Tension	18g/13g Cube	33g Cube	42g Cube
220/240V 50 Hz	23220	23220	23787
220/230V 60 Hz	23220	23787	23787
110/115V 60 Hz	23281	23789	23789

Ref. 11 - Timer

Tension	18 g Cube	33 g Cube	13 g Cube	42 g Cube
220/240V 50 Hz	23222	23248	23247	23780
220/230V 60 Hz	23248	23780	23247	23780
110/115V 60 Hz	23259	23786	23258	23786

Rev. 5 - 21/07/2005