AMIKA

SPARE PARTS CATALOGUE
ERSATZTEILKATALOG
CATALOGUE PIECES DETACHEES
CATALOGO PARTI RICAMBIO
CATALOGO DE PIEZAS DE RECAMBIO
CATALOGO PEÇAS DE REPOSICAO

260XL

400V-3Ph-50Hz
400V-3Ph-60Hz

04-07-2017

1

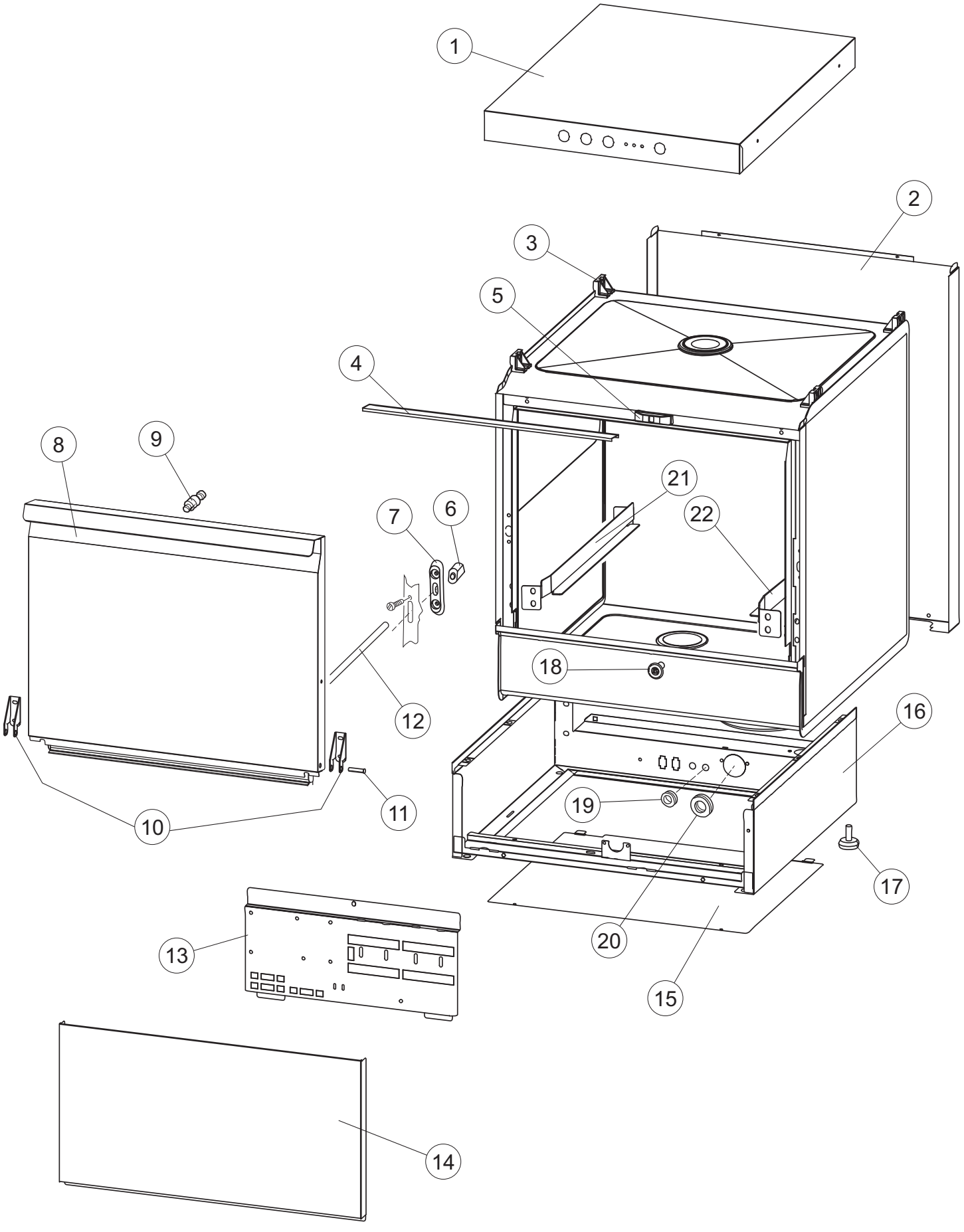

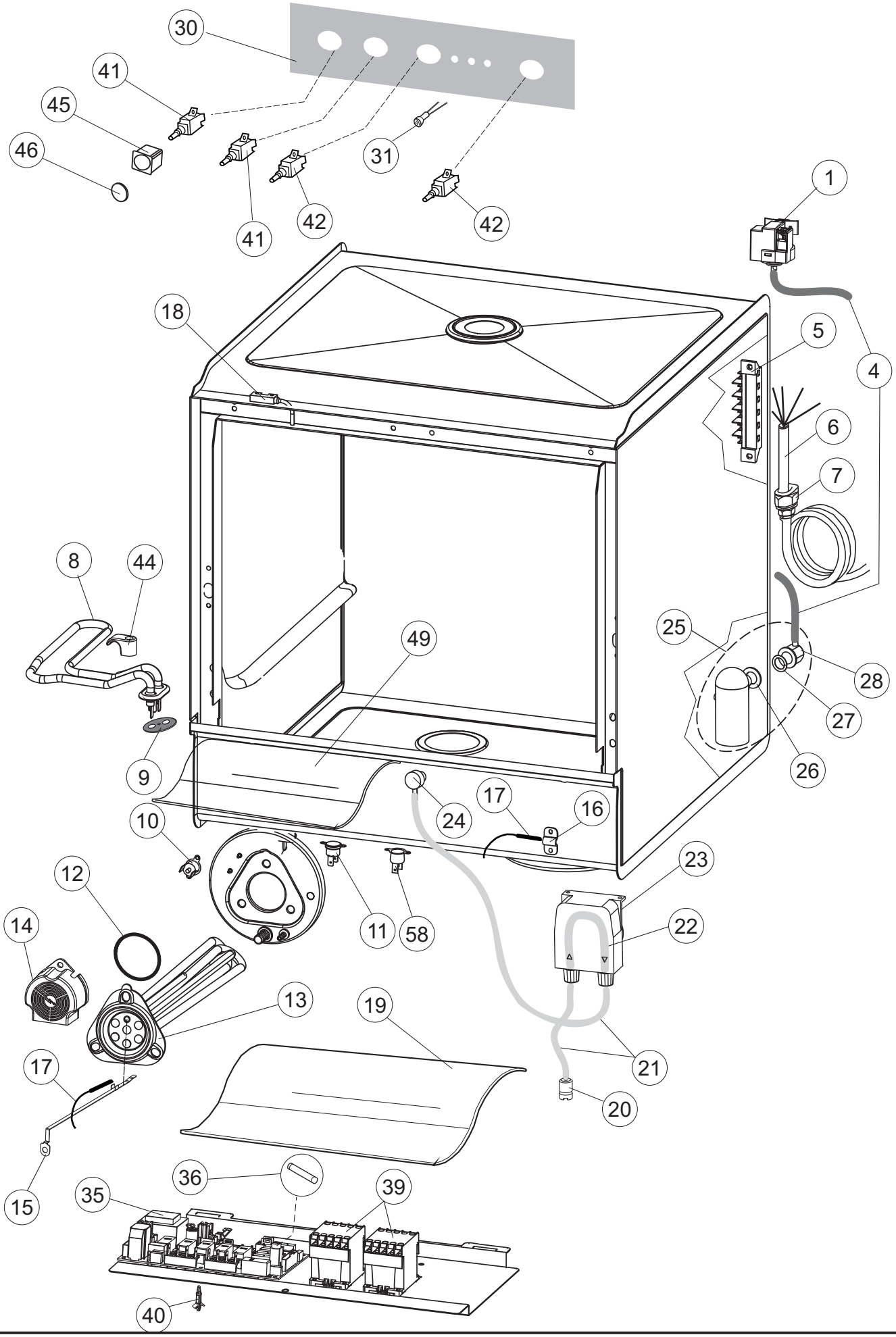
30
41
45
46
41
42
31
42
1
4
18
5
6
7
8
44
49
25
28
27
26
9
10
24
17
16
23
12
14
11
58
22
13
19
21
17
20
15
36
39
35
40

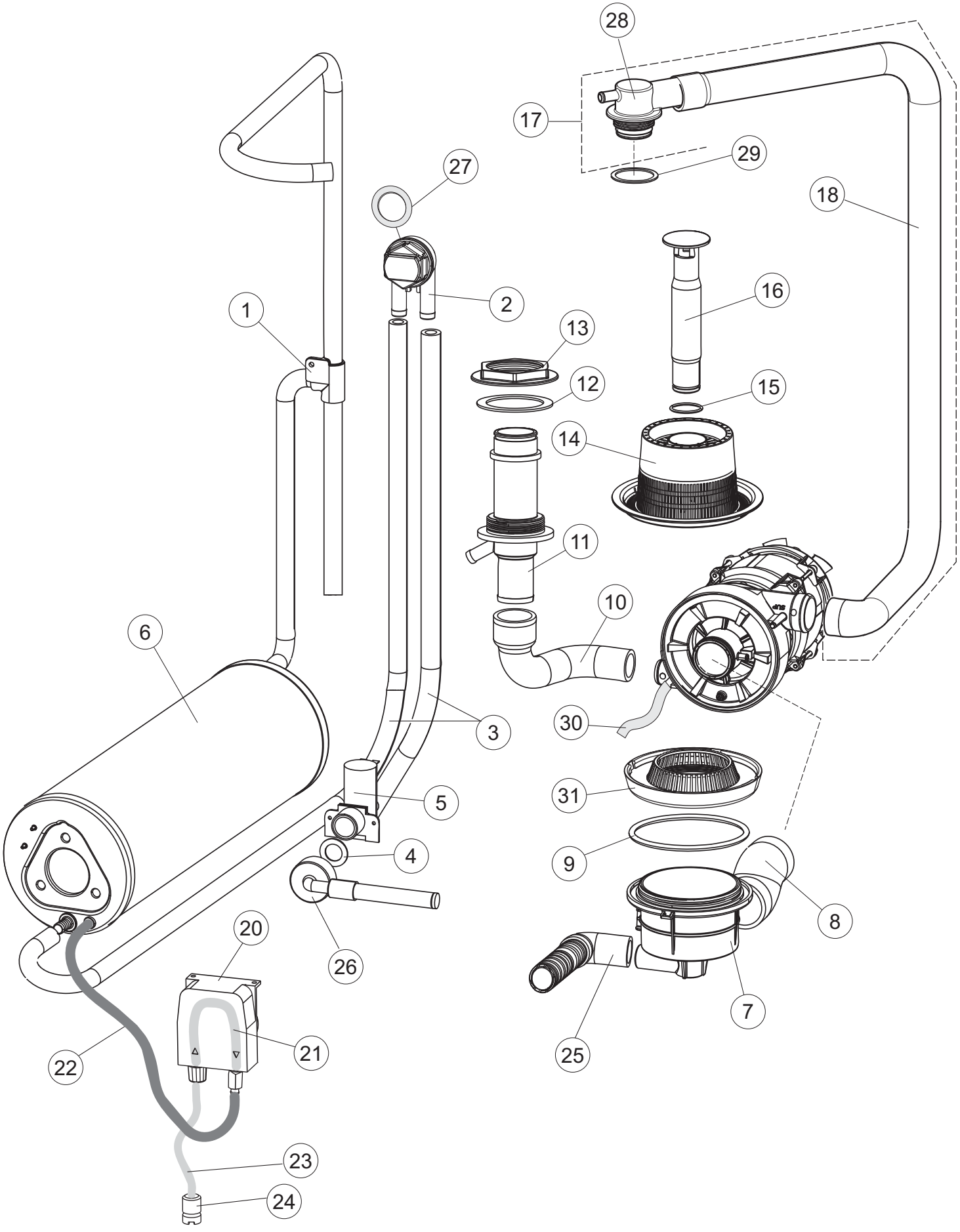
28
17
29
27
18
1
2
16
13
12
15
14
11
10
6
3
30
31
5
9
4
8
20
26
7
22
21
25
23
24

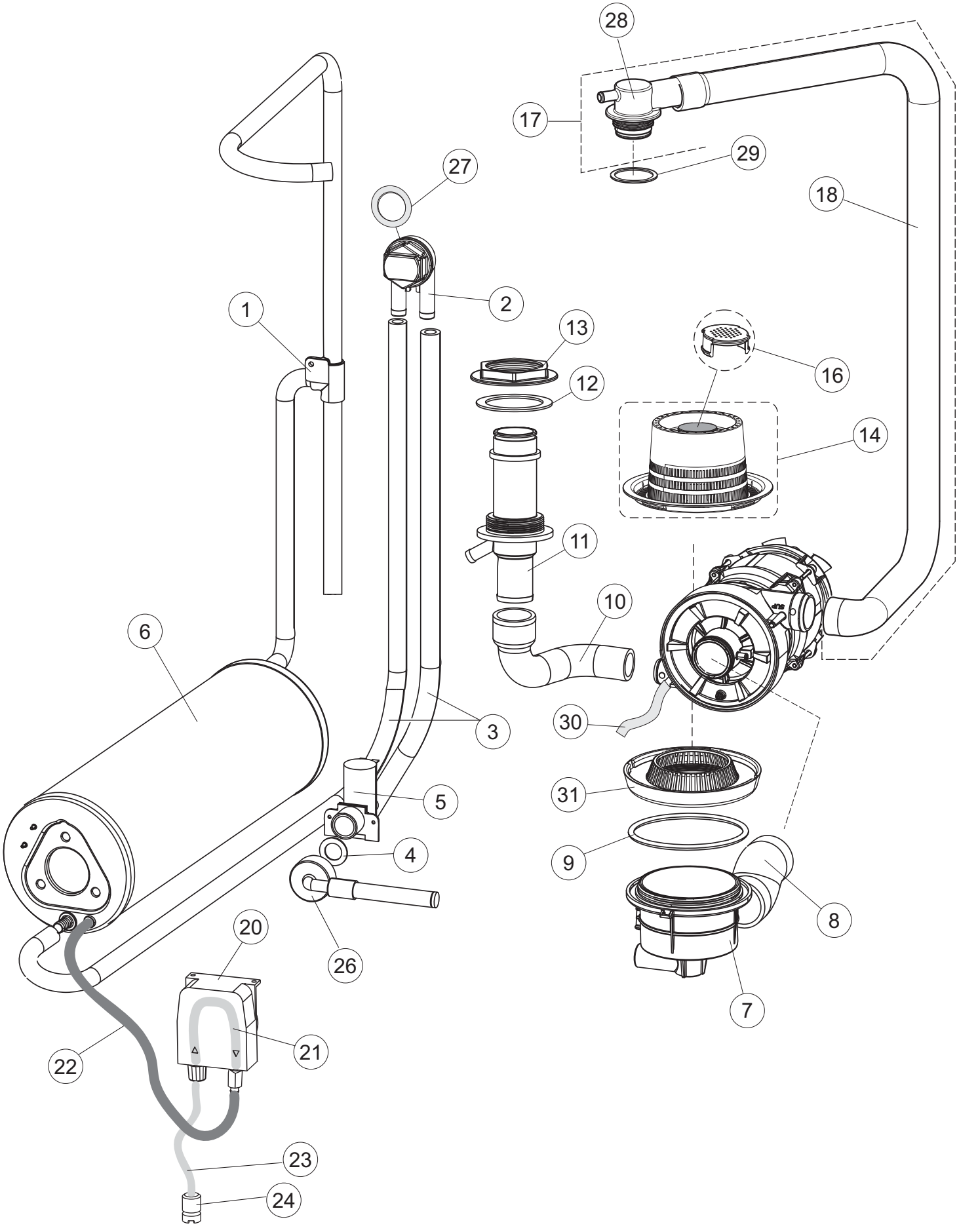

Drain Pump (Optional)

260XL

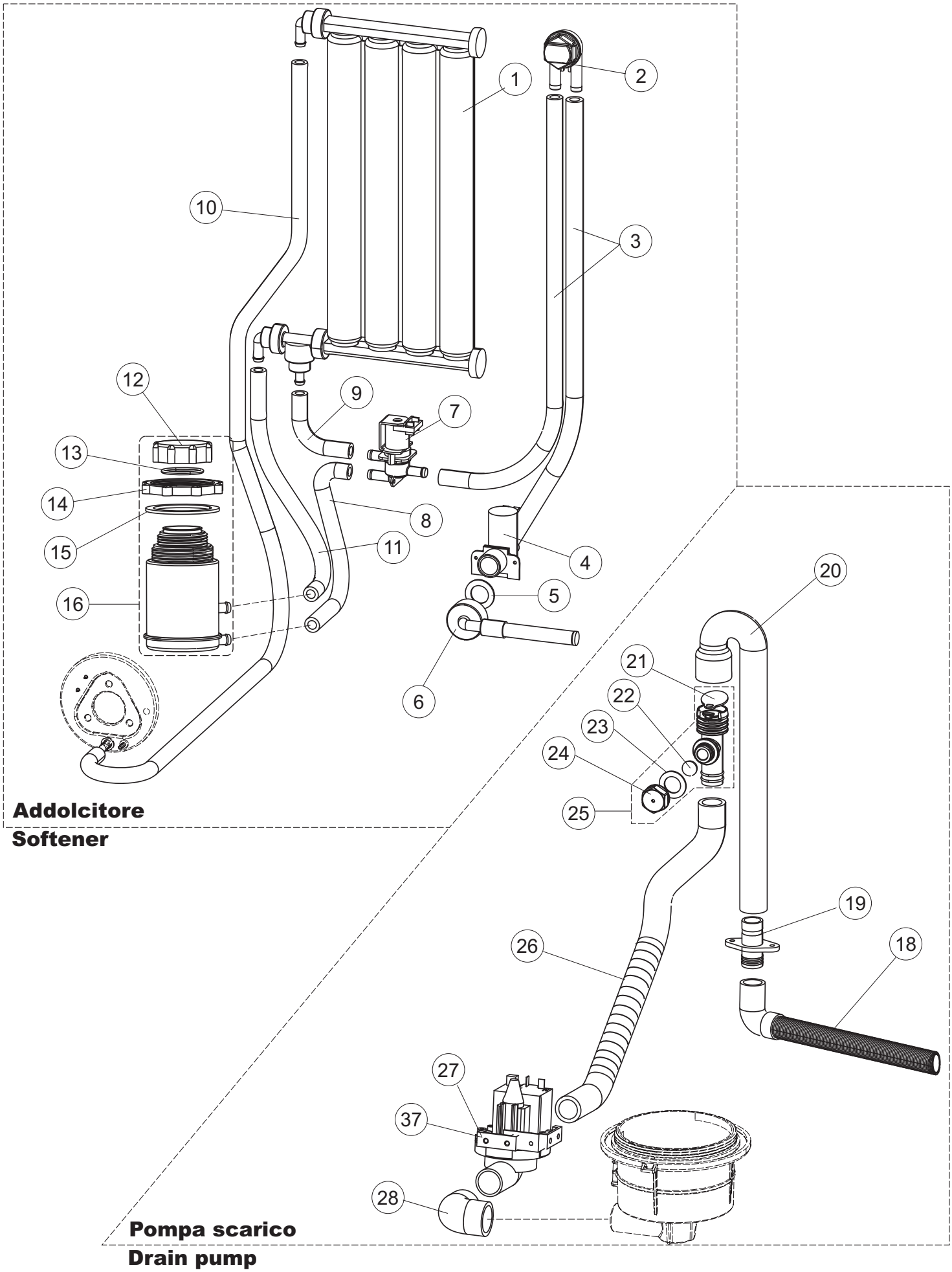
1
2
3
4
5
6
7
8
9
10
11
12
13
14
15
16
Addolcitore
Softener
20
21
22
23
24
25
26
27
28
37
18
19
Pompa scarico
Drain pump

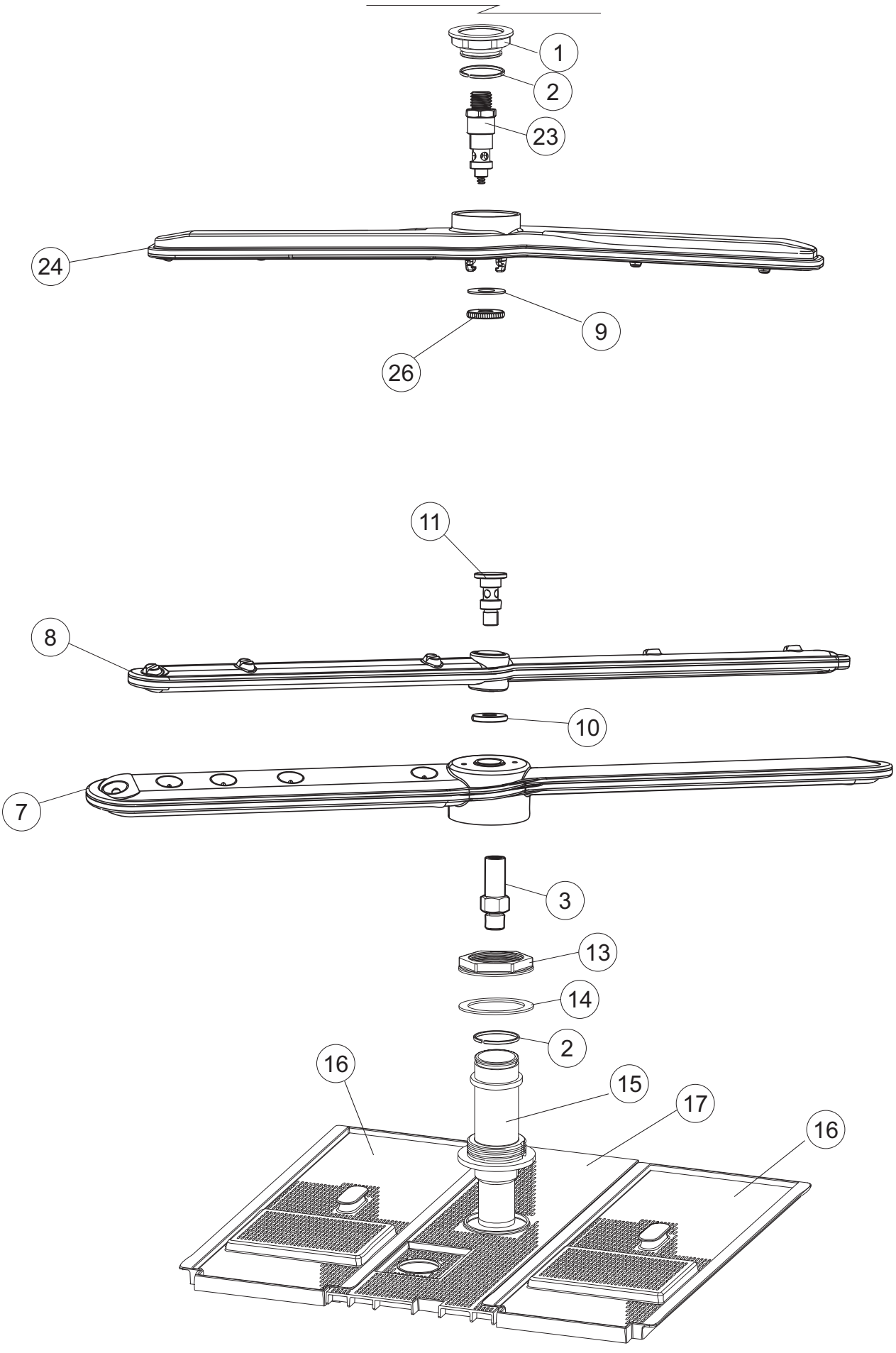
1
2
23
24
9
26
11
8
10
7
3
13
14
2
16
15
17
16

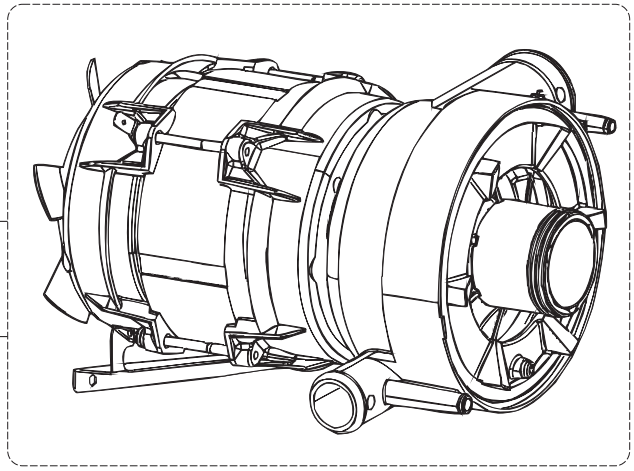
1
15

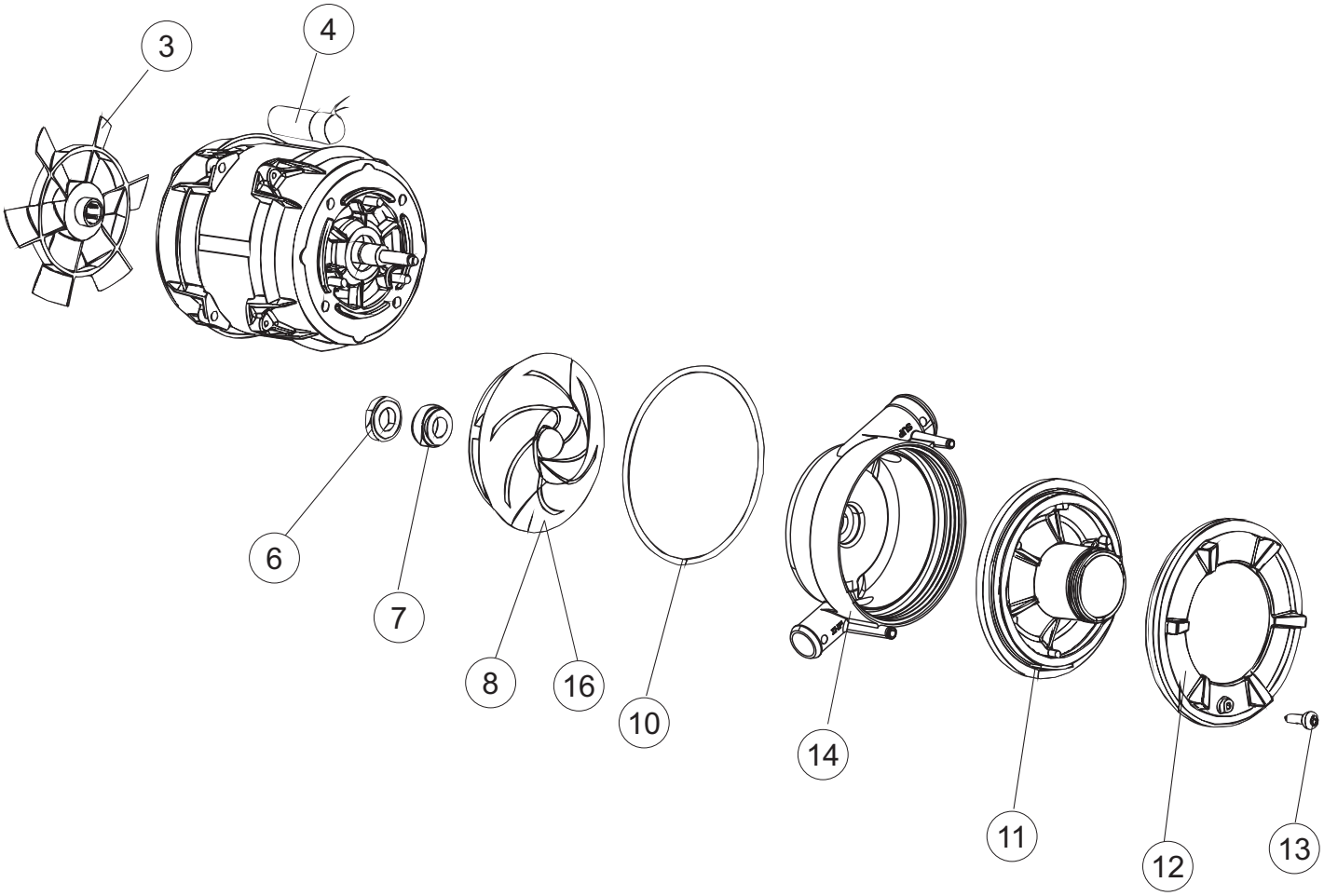
3
4
6
7
8
16
10
14
11
12
13

917852 DISHWASHER 260XL AMIKA 400/50-3N

(*) Recommended spare part.

Page	Spare part position	Spare part code no.	Old code number	Description	U.m.	Price euro
1	1	004242		TOP PANEL	NR	100,93
1	2	022159		BACK PANEL	NR	45,31
1	3	035113		support bracket	NR	0,82
1	4	437081	REB437081	DOOR GASKET 50/505	NR	9,26
1	5	994012	DWS30	DOOR LOCK FOR DISHWASHERS	NR	22,48
1	6	417041	REB417041	DOOR CLOSING CONTACT BETA 50 (S6198)	NR	3,52
1	7	307003	REB307003	NUT OF TOP DOOR-STOP BAR	NR	5,10
1	8	029721		DOOR	NR	217,04
1	9	325066	REB325066	DOOR CLOSURE STAKE FOR GLASSWASHERS	NR	4,03
1	10	311019	REB311019	DOOR HINGE D18/G25 (S6662)	NR	5,85
1	11	325036	REB325036	PIVOT	NR	4,54
1	12	304021	REB304021	DOOR TIE ROD FOR DISHWASHER (S6323)	NR	7,98
1	13	035112		WIRING PANEL	NR	21,86
1	14	012338		FRONT PANEL	NR	40,42
1	15	030195		UNDERPROTECTION FOR BASIS OF GLASS- WASHER	NR	17,41
1	16	040123		BASE FRAME LA500	NR	116,40
1	17	461019	REB461019	HEXAGONAL FOOT ADJUSTABLE FOR DISHWASHER	NR	2,35
1	18	480153		PLUG	NR	0,85
1	19	459006	REB459006	CHOCK D INT 9 EST 16	NR	0,54
1	20	459004	REB459004	DRAIN PUMP CHOCK	NR	2,35
1	21	015064		RACK SLIDE SX.	NR	9,53
1	22	015063		RACK SLIDE DX.	NR	10,87
2	1	224031		PRESSURE SWITCH	NR	40,00
2	4	143235		PIPE	MT	8,47
2	5	220011	REB220011	TERMINAL BLOCK	NR	10,03
2	6	H.374339-2		CABLE H07RN-F 5X2.5X2.5MT	NR	34,01
2	7	459005	REB459005	CABLE-RETAINER	NR	11,09
2	8	230118		TANK HEATIMG ELEMENT	NR	49,58
2	9	437086	REB437086	PACKING OF THE TANK RESISTANCE	NR	5,08
2	10	236047	REB236047	SAFETY TANK THERMOSTAT 95°C	NR	9,91
2	11	236052		THERMOSTAT 90°+/-3°C	NR	10,11
2	12	456002	REB456002	O-ring	NR	1,21

917852 DISHWASHER 260XL AMIKA 400/50-3N

(*) Recommended spare part.

Page	Spare part position	Spare part code no.	Old code number	Description	U.m.	Price euro
2	13	230111		HEATING ELEMENT	NR	96,95
2	14	69870		BOILER HEATING ELEMENT PROTECTION	NR	3,74
2	15	69871		PROBE HOLDER	NR	10,82
2	16	028105		FIXING PLATE	NR	1,23
2	17	231016		TEMPERATURE PROBE	NR	27,63
2	18	80871		MAGNETIC DOOR SWITCH	NR	21,12
2	19	214114		TRANSPARENT PROTECTION FOR ELECTRIC INSTALLATION FOR DISHWASHER	NR	7,51
2	20	121993		filter aid dispenser	NR	7,84
2	21	143194	REB143194	PIPE	MT	1,04
2	22	143258		"SANTOPRENE" PIPE	NR	23,04
2	23	209043		DETERGENT DOSING PUMP	NR	78,56
2	24	999348		DETERGENT TANK FITTING	NR	19,67
2	25	984007		control group the level of water	NR	5,58
2	26	437019	REB437019	PACKING FOR AIR TRAP OF PRESSURE SWITCH	NR	1,21
2	27	456020	REB456020	O-ring	NR	1,21
2	28	468029	REB468029	AIR TRAP CONNECTION OF PRESSURE SWITCH	NR	2,22
2	30	026414		CONTROL ADHESIVE INTERFACE	NR	31,99
2	31	216032		LAMP	NR	2,46
2	35	215042-4		MAIN BOARD GET50.2	NR	195,98
2	36	228010		FUSE	NR	1,37
2	39	229042		AUXILIARY CONTACT	NR	39,65
2	40	461028		foot board support	NR	0,55
2	41	208010	REB208010	DOUBLE SWITCH	NR	7,37
2	42	226071	REB226071	CYCLE PUSH-BUTTON - 2 CONTACTS	NR	8,66
2	44	999351		GROUP STOPPED TANK HEATER	NR	12,18
2	45	226129		push button case	NR	1,07
2	46	227079		BUTTON	NR	1,03
2	49	214108		PVC CURTAIN FOR ELECTRIC PROTECTION	NR	13,96
2	58	236047	REB236047	SAFETY TANK THERMOSTAT 95°C	NR	9,91
3	1	143263		PIPE	NR	46,73
3	2	144030		NO RETURN VALVE	NR	22,40
3	3	143004	REB143004	PIPE	MT	15,41

917852 DISHWASHER 260XL AMIKA 400/50-3N

(*) Recommended spare part.

Page	Spare part position	Spare part code no.	Old code number	Description	U.m.	Price euro
3	4	437041	REB437041	GASKET	NR	1,45
3	5	240011	REB240011	FILL VALVE	NR	14,01
3	6	104060		BOILER	NR	126,93
3	7	136030		ASPIRATION AND DRAIN BODY	NR	8,50
3	8	127082		DELIVERY WASH HOSE	NR	15,37
3	9	456076		O-RING	NR	3,05
3	10	127085		DELIVERY WASH HOSE	NR	21,26
3	11	115143		MAINFOLD	NR	10,77
3	12	437102		GASKET	NR	2,05
3	13	429073		RING NUT	NR	7,52
3	14	121120		STAINER	NR	12,80
3	15	456081		O-ring	NR	1,61
3	16	142058		OVERFLOW PIPE	NR	10,41
3	17	115150		MAINFOLD	NR	46,51
3	18	127133		DELIVERY WASH HOSE	NR	60,37
3	20	209042		DOSING PUMP	NR	78,56
3	21	143261		HOSE	NR	29,08
3	22	143005	SPG10	LINEN RUBBER PIPE 5X12 - BLACK	MT	12,03
3	23	H.775601		PIPE	MT	4,57
3	24	121993		filter aid dispenser	NR	7,84
3	25	143252		DRAIN HOSE	NR	17,96
3	26	143270		INLET WRAS PIPE	NR	6,86
3	27	437080		GASKET	NR	1,58
3	28	115149		support arms wash / rinse	NR	4,89
3	29	437113		GASKET	NR	1,37
3	30	H.165168		PIPE	MT	2,96
3	31	429072		RING NUT	NR	8,70
4	1	143263		PIPE	NR	46,73
4	2	144030		NO RETURN VALVE	NR	22,40
4	3	143004	REB143004	PIPE	MT	15,41
4	4	437041	REB437041	GASKET	NR	1,45
4	5	240011	REB240011	FILL VALVE	NR	14,01

917852 DISHWASHER 260XL AMIKA 400/50-3N

(*) Recommended spare part.

Page	Spare part position	Spare part code no.	Old code number	Description	U.m.	Price euro
4	6	104060		BOILER	NR	126,93
4	7	136030		ASPIRATION AND DRAIN BODY	NR	8,50
4	8	127082		DELIVERY WASH HOSE	NR	15,37
4	9	456076		O-RING	NR	3,05
4	10	127085		DELIVERY WASH HOSE	NR	21,26
4	11	115143		MAINFOLD	NR	10,77
4	12	437102		GASKET	NR	2,05
4	13	429073		RING NUT	NR	7,52
4	14	121135		SUCTION FILTER UNIT	NR	18,97
4	16	480162		PLUG	NR	2,59
4	17	115150		MAINFOLD	NR	46,51
4	18	127133		DELIVERY WASH HOSE	NR	60,37
4	20	209042		DOSING PUMP	NR	78,56
4	21	143261		HOSE	NR	29,08
4	22	143005	SPG10	LINEN RUBBER PIPE 5X12 - BLACK	MT	12,03
4	23	H.775601		PIPE	MT	4,57
4	24	121993		filter aid dispenser	NR	7,84
4	26	143270		INLET WRAS PIPE	NR	6,86
4	27	437080		GASKET	NR	1,58
4	28	115149		support arms wash / rinse	NR	4,89
4	29	437113		GASKET	NR	1,37
4	30	H.165168		PIPE	MT	2,96
4	31	429072		RING NUT	NR	8,70
5	1	117009		WATER SOFTNER	NR	79,41
5	2	144030		NO RETURN VALVE	NR	22,40
5	3	143004	REB143004	PIPE	MT	15,41
5	4	240016	DEV3S16	SOLENOID VALVE	NR	18,29
5	5	437041	REB437041	GASKET	NR	1,45
5	6	143270		INLET WRAS PIPE	NR	6,86
5	7	999288		SOLENOID VALVE	NR	52,05
5	8	127138		SLEEVE	NR	6,53
5	9	127140		SLEEVE	NR	3,26

917852 DISHWASHER 260XL AMIKA 400/50-3N

(*) Recommended spare part.

Page	Spare part position	Spare part code no.	Old code number	Description	U.m.	Price euro
5	10	127137		SLEEVE	NR	19,59
5	11	127139		SLEEVE	NR	6,53
5	12	480005	REB480005	SALT CONTAINER SCREW CAP	NR	8,02
5	13	456052	REB456052	O-ring	NR	1,21
5	14	429011	REB429011	RING NUT	NR	6,99
5	15	437034	REB437034	GASKET	NR	5,13
5	16	406998	REB406998	SALT CONTAINER UNIT	NR	29,08
5	18	143137	REB143137	DRAIN HOSE	NR	17,96
5	19	468152	REB468152	DRAIN CONNECTION FOR DISHWASHERS SERIE	NR	4,02
5	20	127136		SLEEVE	NR	17,14
5	21	499092		diaphragm valve vent	NR	2,21
5	22	476008		SPHERE	NR	1,83
5	23	437083		GASKET	NR	0,62
5	24	468199		PIPE FITTING	NR	6,31
5	25	144992		NO RETURN VALVE	NR	15,67
5	26	127158		SLEEVE	NR	5,86
5	27	130175		DRAIN PUMP	NR	46,99
5	28	127134		suction pipe	NR	6,53
6	1	429079		RING NUT	NR	3,08
6	2	303040		RING	NR	3,91
6	3	325097		PIVOT	NR	29,82
6	7	129076		COMPLETE WASH ARM	NR	27,01
6	8	129080		COMPLETE RINSE ARM	NR	27,03
6	9	437117		WASHER	NR	0,42
6	10	80697		RING NUT	NR	11,52
6	11	80700		PIVOT	NR	15,67
6	13	429073		RING NUT	NR	7,52
6	14	437102		GASKET	NR	2,05
6	15	115143		MAINFOLD	NR	10,77
6	16	121139		STAINER	NR	21,89
6	17	121145		STAINER	NR	9,76
6	23	325109		PIVOT	NR	16,39

(*) Recommended spare part.

Page	Spare part position	Spare part code no.	Old code number	Description	U.m.	Price euro
6	24	990128		RINSE AND WASH ARM	NR	15,20
6	26	454006		RING NUT	NR	4,37
7	1	130977		WASH-BODY UNIT AND PUMP (130174)LA500 50HZ	NR	214,87
7	3	335015		WASHPUMP FUN	NR	12,12
7	4	206002	REB206002	CAPACITOR	NR	27,45
7	6	141008		WASHPUMP SHAFT SEAL	NR	8,84
7	7	141009		WASHPUMP SHAFT SEAL	NR	8,84
7	8	124057		ELECTROPUMP IMPELLER	NR	37,33
7	10	456078		O-RING	NR	4,78
7	11	480159		PLUG	NR	14,29
7	12	429074		RING NUT	NR	15,83
7	13	486242		SCREW	NR	0,17
7	14	116032		ELECTROPUMP HOUSING	NR	26,66