MERRYCHEF®

High Speed Oven

Project _____

Item _____

Quantity _____

CSI Section 11400

Approval _____

Date _____

eikon® e3

Merrychef eikon® e3

e3 _EE
e3C _EE*

e3 _XE
e3C _XE*

e3 _XX
e3C _XX*





Standard Features

- Microwave combination mode reduces cooking times by up to 6 times
- Ventless operation*
- Turntable gives you extremely even browning
- Quick pre-heat time (15 minutes)
- easyTouch® – icon driven touch screen user interface
- Monitored, toolless, front mounted air filter
- USB memory stick data transfer of up to 1024 cooking profiles
- Built-in diagnostic testing
- Easy to clean cavity

Accessories

- Vitreous enamel rectangular oven tray
- Round tray
- Teflon mat
- Merrychef® cleaner
- Merrychef® protector

Specifications

The eikon® e3 offers excellent results for any call order menu. It is the best solution for shops, bakeries, smaller restaurants, butchers with lunch specials or snack stands.

The eikon® e3C model includes a built-in catalytic converter eliminating the need for a ventilation hood.

A standard metal baking tray can be used when in convection mode.

The user interface allows multi-stage programming. Each cooking profile offers up to six stages each with its own time, microwave power settings and between stage instructions.

The USB memory stick allows the user to upload and download up to 1024 new cooking profiles. A change of menu could be implemented simultaneously in remote sites using this feature.

HOW IT WORKS

Air in the oven cavity is cleaned by being drawn through the catalytic converter* (1) by the convection fan (2) and then passes over the heater element and is circulated into the oven cavity (3) at the set temperature.

* e3C models only.

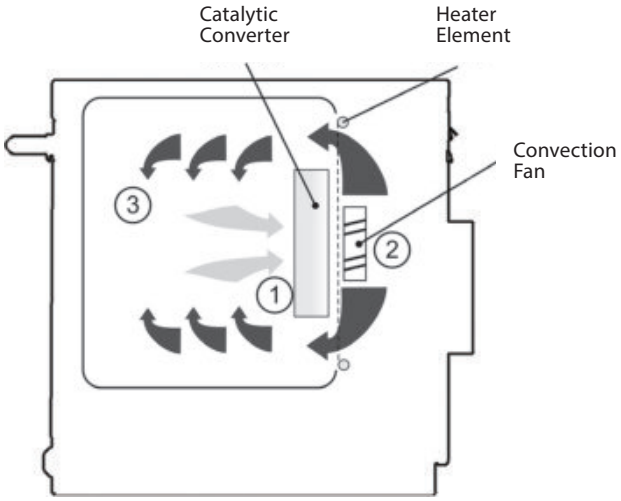

CE

Welbilt UK Limited,
Ashbourne House, The Guildway,
Old Portsmouth Road,
Guildford, GU3 1LR, United Kingdom

Tel: +44(0)1483 464900
Fax: +44(0)1483 464905

www.welbilt.com
www.merrychef.com

WELBILT®

MERRYCHEF®

eikon® e3

STANDARD ACCESSORIES

- Handle
- Round tray 2x
- Square tray 2x
- Pack option: Round trays (3x) + Teflon liners (3x)

CONSTRUCTION

- Stainless steel cavity and casework

MICROWAVE POWER

- Microwave settings: off or 5–100% in 1% increments
- Safety system: agency approved monitored interlock door system, current monitoring and overheat detection for magnetron

CONVECTED HEAT

- Temperature settings: 0°C off and from 100°C to 275°C in 1°C steps
- Safety system: oven cavity overheat detection

Oven Cavity Dimensions

Internal cavity width
13.1 in / 332 mm

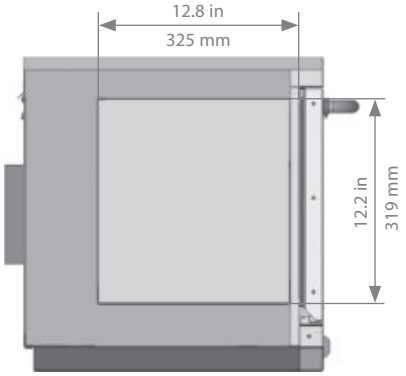

Oven Dimensions

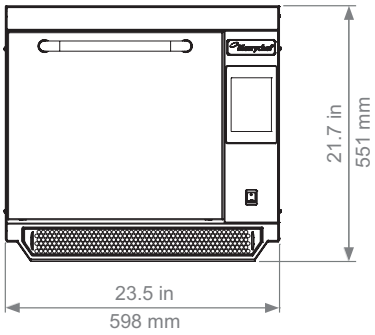

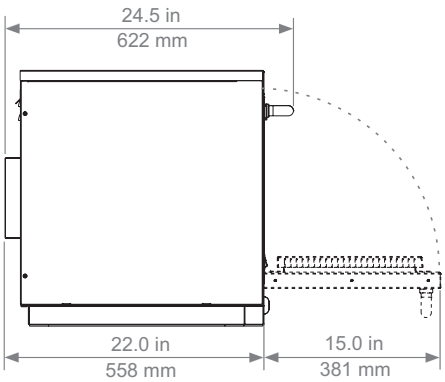

DIMENSIONS

MODEL	OVERALL SIZE			NET WEIGHT
	HEIGHT	WIDTH	DEPTH	
e3_EE e3_XE	551 mm (21.7")	598 mm (23.5")	558 mm (22.0")	62.5 kg (138 lbs)
e3_XX				
e3C_EE e3C_XE				
e3C_XX				

POWER REQUIREMENTS & OUTPUT

MODEL	POWER INPUT	POWER OUTPUT (APPROX.)		
		MICROWAVE (IEC 705) 100%	CONVECTED HEAT	COMBINATION MODE
e3_EE / e3C_EE	3000 W	700 W*	3000 W	700 W* + 3000/1500 W
e3_XE / e3C_XE	4300 W	700 W*	3000 W	700 W* + 3000 W
e3_XX / e3C_XX	4700 W	1000 W*	3000 W	1000 W* + 3000 W

COUNTRY/ REGION	ELECTRICAL SUPPLY			
	VOLTAGE	ARRANGEMENT	CONNECTIONS USED	PLUG CURRENT RATING PER PHASE**
EU / UK	230 V 50 Hz	Single Phase	1P N & E	13 A / 16 A or 32 A
EU / UK	400 V 50 Hz	Dual Phase	2P N & E	16 A / 32 A
CN	220 V 50 Hz	Single Phase	1P N & E	32 A
TW, SA, BR	220 V 60 Hz	Single Phase	1P N & E	32 A

* This is approx. microwave power output. ** This is not consumption.

Model _EE Moulded 13 A plug BS 1363A (UK only)

For models suitable for a 60 Hz supply configuration or for further information on Merrychef® products and services or advice on which machine suits you best please contact the Sales Office.

Tel: +44 (0)1483 464901

INSTALLATION INFORMATION

- Away from major heat source.
- Place on a flat surface suitable for weight.
- Allow a minimum of 2in / 50mm clearance to sides, top and rear to allow air to circulate freely.
- Allow sufficient clearance to the front of the oven for the door to open fully.

ASSOCIATE OF CEDA

Part Number 3223794 issue 9 ENG-GBR 11/15. © 2015 Manitowoc Foodservice UK Ltd. We reserve the right to change specifications appearing in this bulletin without incurring any obligation for equipment previously or subsequently sold.

Welbilt UK Limited,
Ashbourne House, The Guildway,
Old Portsmouth Road,
Guildford, GU3 1LR, United Kingdom

Tel: +44(0)1483 464900
Fax: +44(0)1483 464905

www.welbilt.com
www.merrychef.com

WELBILT®