XESW-03HS-EDDN/1.D01 3 460X330 SPEED.PRO DUO OVEN

Assembly code	Assembly revision	Assembly image
ASM3238A/0.D00	Electrical system	
ASM3274A/0.D00	Door	
ASM3199A/0.D01	Cooking chamber	
ASM3226A/0.D02	External cover	
ASM3244A/0.D01	Electrical system	

ASM3238A/0.D00 - Electrical system

FRONT

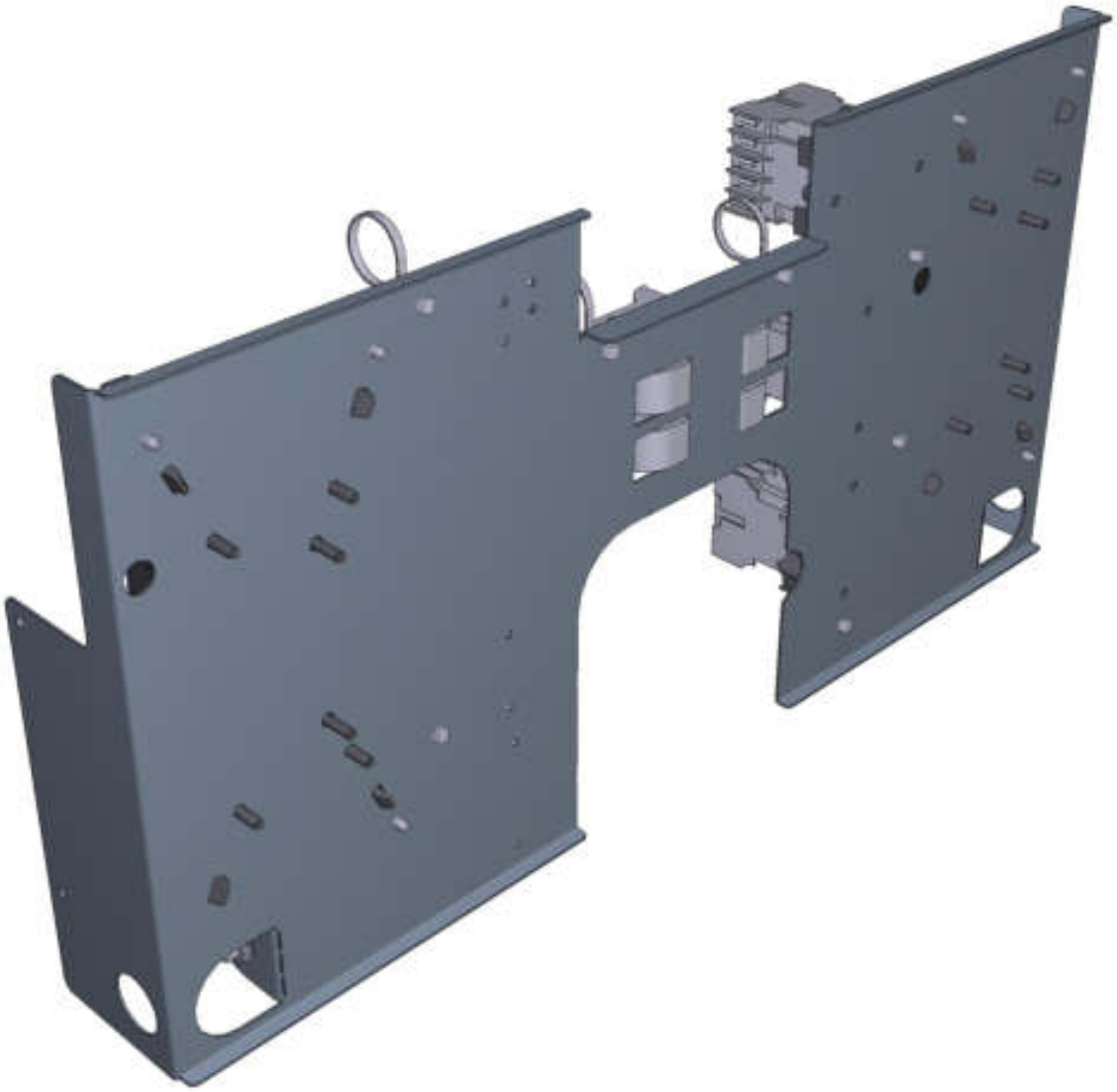

ASM3238A/0.D00 - Electrical system

REAR

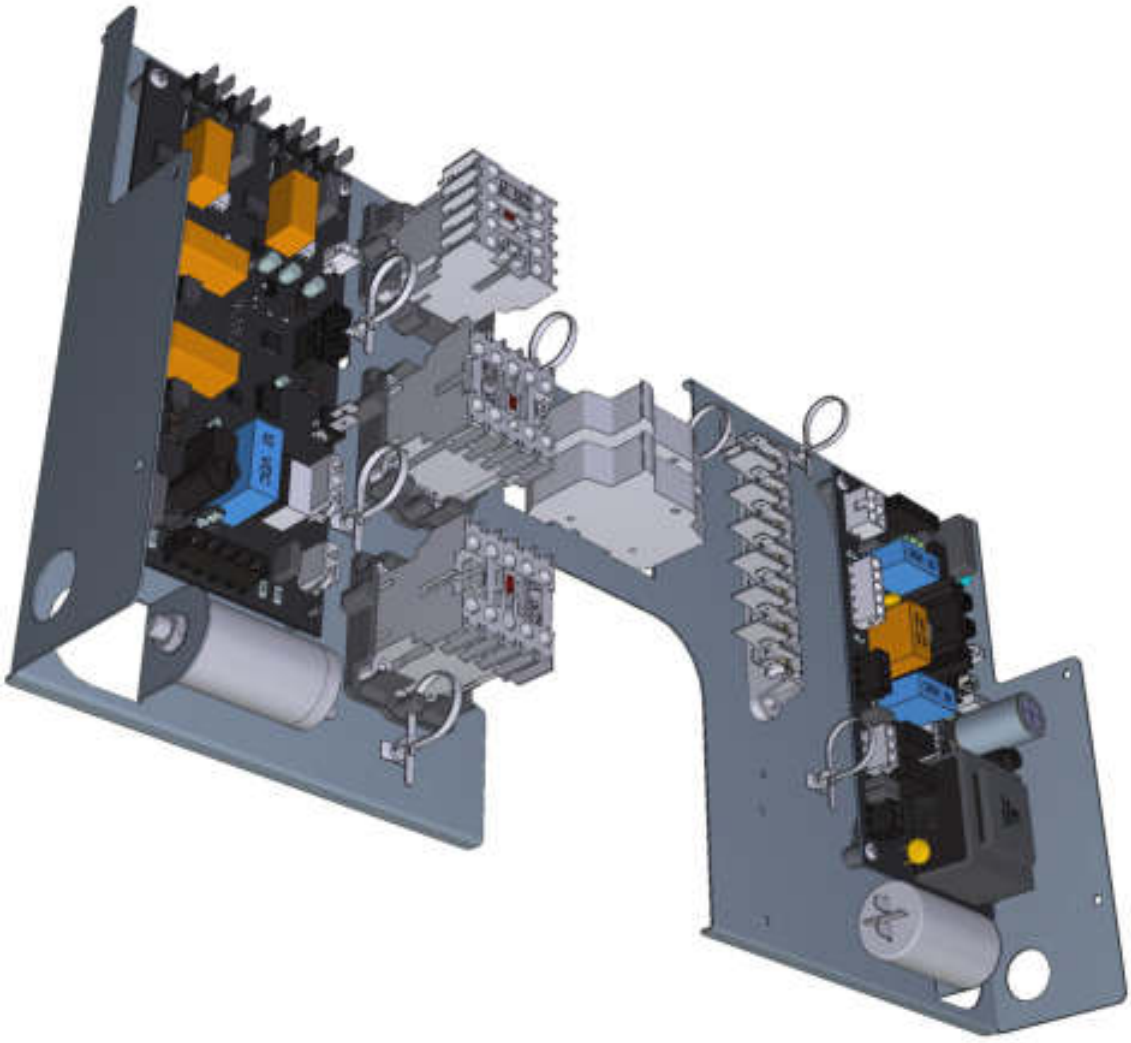

COMPONENT			SPARE PART		
Code	*Description*	*Image*	*Code*	*Description*	*Components list*
CN1003A	6,3 UF MOTOR CAPACITOR		KCN1003A	6,3 UF MOTOR CAPACITOR KIT	**Code** / **Description** / **Qty** / **UOM** CN1003A0 — 6,3 UF MOTOR CAPACITOR — 1 — PZ VI1931A0 — M8 NUT+INDENTED WASHER D=8 X COND. — 1 — PZ VI1932A0 — M8 NUT+INDENTED WASHER D=8 X COND. — 1 — PZ VM1224A0 — 65MY 220MM 2 COLOURS SHRINK TUBE — 0.200 — M
VE1115A	20 A 230V 4 POLES MINICONTACTOR		KVE1115A	20A 230V 4 POLES MINICONTACTOR KI	**Code** / **Description** / **Qty** / **UOM** VE1115A0 — 20 A 230V 4 POLES MINICONTACTOR — 1 — PZ VM1075A1 — PLASTIC CLIP TO FIX CONTACTORS — 4 — PZ VM1224A0 — 65MY 220MM 2 COLOURS SHRINK TUBE — 0.250 — M
VM1056A	SMALL CONTACTOR BRACKET VE1115A		VM1056A0	SMALL CONTACTOR BRACKET VE1115A	
CN1010A	MOTOR CAPACITOR 3,5?F 450V,CE/UL,P CLASS		KCN1010A	3.5UF MOTOR CAPACITOR KIT	**Code** / **Description** / **Qty** / **UOM** CN1010A0 — MOTOR CAPACITOR 3,5?F 450V,CE/UL,P CLASS — 1 — PZ VI1931A0 — M8 NUT+INDENTED WASHER D=8 X COND. — 1 — PZ VI1932A0 — M8 NUT+INDENTED WASHER D=8 X COND. — 1 — PZ VM1224A0 — 65MY 220MM 2 COLOURS SHRINK TUBE — 0.200 — M

COMPONENT			SPARE PART		
Code	*Description*	*Image*	*Code*	*Description*	*Components list*
MR1004A	41A 450V 7 POLES TERMINAL		KMR1004A	7FTW 1+2+3/4+5+6 TERMINAL BLOCK KIT	Code / Description / Qty / UOM MR1004A1 — 41A 450V 7 POLES TERMINAL — 1 — PZ VM1224A0 — 65MY 220MM 2 COLOURS SHRINK TUBE — 0.300 — M
VE1632A	MONOPOL SECTION FUSE HOLDER 10X38 32A		KVE1632A	10X38 32A FUSE HOLDER KIT	Code / Description / Qty / UOM VE1632A0 — MONOPOL SECTION FUSE HOLDER 10X38 32A — 1 — PZ
VM1187A	POWER BOARD FRAME SHOP.PRO		VM1187A0	POWER BOARD FRAME SHOP.PRO	
PE2102A	BL LED/TOUCH/PLUS 230V POWER BOAR		KPE2102A	BL LED/TOUCH/MASTER 230V POWER CARD KIT	Code / Description / Qty / UOM PE2102A0 — BL LED/TOUCH/PLUS 230V POWER BOARD KIT — 1 — PZ PE2102A1 — BL LED/TOUCH/PLUS 230 V POWER CARD — 1 — PZ PE2102A2 — BL LED/TOUCH/PLUS 230V POWER BOAR — 1 — PZ VI1988A0 — AUTOTHREADING SCREW 4,2X19 TCB+ INOX — 3 — PZ VM1187A0 — POWER BOARD FRAME SHOP.PRO — 1 — PZ VM2147A0 — 410X343X15 MM PINK SMOOTH ESD SPONGE — 1 — PZ

COMPONENT			SPARE PART		
Code	*Description*	*Image*	*Code*	*Description*	*Components list*
VM1187A	POWER BOARD FRAME SHOP.PRO		VM1187A0	POWER BOARD FRAME SHOP.PRO	
PE2152A	MW POWER BOARD		KPE2152A	SPEED.PRO POWER BOARD KIT	Code / Description / Qty / UOM PE2152A0 / MW POWER BOARD / 1 / PZ VI1988A0 / AUTOTHREADING SCREW 4,2X19 TCB+ INOX / 3 / PZ VM2147A0 / 410X343X15 MM PINK SMOOTH ESD SPONGE / 1 / PZ
0H5264A			0H5264A1		

ASM3274A/0.D00 - Door

FRONT



ASM3274A/0.D00 - Door

REAR



COMPONENT			SPARE PART		
Code	*Description*	*Image*	*Code*	*Description*	*Components list*
CE1285A	EMI ROUND FERRITE MOD.2643801502	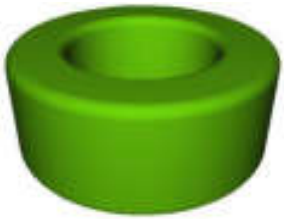	CE1285A0	EMI ROUND FERRITE MOD.2643801502	
VI1074A	4X16 SCREW FOR PLASTIC		VI1074A0	4X16 SCREW FOR PLASTIC	
CE1065A	4X0.5 MICROFIT WIRE 4P-500MM-MICROFIT4P		KCE1065A	4P-500MM MICROFIT CABLE KI	Code / Description / Qty / UOM CE1065A0 / 4X0.5 MICROFIT WIRE 4P-500MM-MICROFIT4P / 1 / PZ VM1224A0 / 65MY 220MM 2 COLOURS SHRINK TUBE / 0.200 / M
0H5265A			0H5265A1		
0H5272A			K0H5272A	MW DOOR MICROSWITCH HOOK KIT	Code / Description / Qty / UOM 0H5272A1 / / 2 / PZ VI1220A1 / 4,2X12 TCB SELF-TAPPING SCREW / 4 / PZ VM1224A0 / 65MY 220MM 2 COLOURS SHRINK TUBE / 0.200 / M

COMPONENT			SPARE PART		
Code	*Description*	*Image*	*Code*	*Description*	*Components list*
VM2527A	STYLUS PEN FOR S		KVM2527A	EVEREO-BLSP TOUCH STYLUS 5 PCS KIT	Code / Description / Qty / UOM VM1224A0 — 65MY 220MM 2 COLOURS SHRINK TUBE — 0.150 — M VM2527A0 — STYLUS PEN FOR SP — 5 — PZ
VM2456A	BAKERLUX SHOP.PRO HANDLE END		KVM2456A	2 PCS BAKERLUX SHOP.PRO HANDLE END KIT	Code / Description / Qty / UOM VI1930A0 — 5X25 ST. STEEL SCREW CHIP — 4 — PZ VM1224A0 — 65MY 220MM 2 COLOURS SHRINK TUBE — 0.300 — M VM2456A0 — BAKERLUX SHOP.PRO HANDLE END — 2 — PZ VM2456A0 — BAKERLUX SHOP.PRO HANDLE END — 2 — PZ VM2489A0 — SP HANDLE END KIT + STYLUS KIT — 1 — PZ VM2527A0 — STYLUS PEN FOR SP — 1 — PZ
TB2843A	MW HANDLE TUBE		KTB2843A	SPEED.PRO DROP DOWN DOOR HANDLE TUBE KIT	Code / Description / Qty / UOM TB2843A0 — MW HANDLE TUBE — 1 — PZ VI1930A1 — ST. STEEL 5X20 CHIP SCREW — 4 — PZ VM2456A0 — BAKERLUX SHOP.PRO HANDLE END — 1 — PZ VM2489A0 — SP HANDLE END KIT + STYLUS KIT — 1 — PZ VM2527A0 — STYLUS PEN FOR SP — 1 — PZ
VN1179A	CONTROL BOARD 40X40X20MM 12V COOLING FAN		KVN1179A	CONTROL BOARD COOLING FAN KIT	Code / Description / Qty / UOM VM1224A0 — 65MY 220MM 2 COLOURS SHRINK TUBE — 0.150 — M VN1179A0 — CONTROL BOARD 40X40X20MM 12V COOLING FAN — 1 — PZ

COMPONENT			SPARE PART		
Code	*Description*	*Image*	*Code*	*Description*	*Components list*
VN1179A	CONTROL BOARD 40X40X20MM 12V COOLING FAN		KVN1179A	CONTROL BOARD COOLING FAN KIT	**Code** / **Description** / **Qty** / **UOM** VN1179A0 — CONTROL BOARD 40X40X20MM 12V COOLING FAN — 1 — PZ VN1179A1 — CONTROL BOARD 40X40X20MM 12V COOLING FAN — 1 — PZ
PE2153A	SP DUO CONTROL BOARD		KPE2153A	SPEED.PRO CONTROL BOARD KIT	**Code** / **Description** / **Qty** / **UOM** PE2153A0 — SP DUO CONTROL BOARD — 1 — PZ VM2147A0 — 410X343X15 MM PINK SMOOTH ESD SPONGE — 1 — PZ
VP1030A			KVP1030A		**Code** / **Description** / **Qty** / **UOM** VM1224A0 — 65MY 220MM 2 COLOURS SHRINK TUBE — 0.200 — M VP1030A0 — 1 — PZ
VP1031A	MW FAN CARRIER		KVP1031A		**Code** / **Description** / **Qty** / **UOM** VM1224A0 — 65MY 220MM 2 COLOURS SHRINK TUBE — 0.200 — M VP1031A0 — MW FAN CARRIER — 1 — PZ
VI1930A	ST. STEEL 5X20 CHIP SCREW		VI1930A1	ST. STEEL 5X20 CHIP SCREW	

COMPONENT			SPARE PART		
Code	*Description*	*Image*	*Code*	*Description*	*Components list*
0H2918A			0H2918A0		
0H2569A			K0H2569A	SPEED.PRO DOOR UPPER HINGE KIT	Code / Description / Qty / UOM 0H2569A0 / / 1 / PZ VI1074A0 / 4X16 SCREW FOR PLASTIC / 3 / PZ VM1524A0 / D 24 D 8 B 8 MW HINGE BEARING / 1 / PZ VM1534A0 / SPEED.PRO DOOR HOLDER BEARING PIN / 1 / PZ VP1077A0 / MW HINGES BALL-BEARING CARRIER / 1 / PZ
VM1524A	D 24 D 8 B 8 MW HINGE BEARING		VM1524A0	D 24 D 8 B 8 MW HINGE BEARING	
VM1534A	SPEED.PRO DOOR HOLDER BEARING PIN		VM1534A0	SPEED.PRO DOOR HOLDER BEARING PIN	
VP1077A	MW HINGES BALL-BEARING CARRIER		KVP1077A	SPEED.PRO HINGES BEARING HOLDER KIT	Code / Description / Qty / UOM VM1224A0 / 65MY 220MM 2 COLOURS SHRINK TUBE / 0.200 / M VP1077A0 / MW HINGES BALL-BEARING CARRIER / 1 / PZ

COMPONENT			SPARE PART		
Code	*Description*	*Image*	*Code*	*Description*	*Components list*
0H2918A			0H2918A0		
0H2569A			K0H2569A	SPEED.PRO DOOR UPPER HINGE KIT	Code / Description / Qty / UOM 0H2569A0 / / 1 / PZ VI1074A0 / 4X16 SCREW FOR PLASTIC / 3 / PZ VM1524A0 / D 24 D 8 B 8 MW HINGE BEARING / 1 / PZ VM1534A0 / SPEED.PRO DOOR HOLDER BEARING PIN / 1 / PZ VP1077A0 / MW HINGES BALL-BEARING CARRIER / 1 / PZ
VM1524A	D 24 D 8 B 8 MW HINGE BEARING		VM1524A0	D 24 D 8 B 8 MW HINGE BEARING	
VM1534A	SPEED.PRO DOOR HOLDER BEARING PIN		VM1534A0	SPEED.PRO DOOR HOLDER BEARING PIN	
VP1077A	MW HINGES BALL-BEARING CARRIER		KVP1077A	SPEED.PRO HINGES BEARING HOLDER KIT	Code / Description / Qty / UOM VM1224A0 / 65MY 220MM 2 COLOURS SHRINK TUBE / 0.200 / M VP1077A0 / MW HINGES BALL-BEARING CARRIER / 1 / PZ

COMPONENT			SPARE PART		
Code	*Description*	*Image*	*Code*	*Description*	*Components list*
VM1524A	D 24 D 8 B 8 MW HINGE BEARING		VM1524A0	D 24 D 8 B 8 MW HINGE BEARING	
0H2574A			K0H2574A	SPEED.PRO DOOR LOWER HINGE KIT	Code / Description / Qty / UOM 0H2574A0 / / 1 / PZ VM1224A0 / 65MY 220MM 2 COLOURS SHRINK TUBE / 0.200 / M VM1524A0 / D 24 D 8 B 8 MW HINGE BEARING / 1 / PZ VM1533A0 / SPEED.PRO DOOR FULCRUM PIN / 1 / PZ
VM1533A	SPEED.PRO DOOR FULCRUM PIN		VM1533A0	SPEED.PRO DOOR FULCRUM PIN	
VP1024A	MW DOOR LEFT LOWER CAP		KVP1024A	SPEED.PRO DOOR LEFT LOWER CAP KI	Code / Description / Qty / UOM VM1224A0 / 65MY 220MM 2 COLOURS SHRINK TUBE / 0.200 / M VP1024A0 / MW DOOR LEFT LOWER CAP / 1 / PZ
VM1524A	D 24 D 8 B 8 MW HINGE BEARING		VM1524A0	D 24 D 8 B 8 MW HINGE BEARING	

COMPONENT			SPARE PART		
Code	*Description*	*Image*	*Code*	*Description*	*Components list*
0H2574A			K0H2574A	SPEED.PRO DOOR LOWER HINGE KIT	Code / Description / Qty / UOM 0H2574A0 / / 1 / PZ VM1224A0 / 65MY 220MM 2 COLOURS SHRINK TUBE / 0.200 / M VM1524A0 / D 24 D 8 B 8 MW HINGE BEARING / 1 / PZ VM1533A0 / SPEED.PRO DOOR FULCRUM PIN / 1 / PZ
VM1533A	SPEED.PRO DOOR FULCRUM PIN		VM1533A0	SPEED.PRO DOOR FULCRUM PIN	
VP1025A	MW DOOR RIGHT LOWER CAP		KVP1025A	SPEED.PRO DOOR RIGHT LOWER CAP KIT	Code / Description / Qty / UOM VM1224A0 / 65MY 220MM 2 COLOURS SHRINK TUBE / 0.200 / M VP1025A0 / MW DOOR RIGHT LOWER CAP / 1 / PZ
CE1053B	MM MICROFIT LED BAR POWER SUPPLY CABLE		KCE1053B	LED BAR EXTENSION CABLE KIT	Code / Description / Qty / UOM CE1053B0 / MM MICROFIT LED BAR POWER SUPPLY CABL / 1 / PZ
GN1682A			KLP1055A	SPEED PRO RGB LED BAR KIT	Code / Description / Qty / UOM CE1053B0 / MM MICROFIT LED BAR POWER SUPPLY CABL / 1 / PZ GN1682A0 / / 1 / PZ IP1385A1 / CORNER POLYSTYRENE PACKING 110X80X2000 / 1 / M LP1055A0 / SPEED PRO RGB LED BAR / 1 / PZ

COMPONENT			SPARE PART		
Code	*Description*	*Image*	*Code*	*Description*	*Components list*
GN1682A			KLP1055A	SPEED PRO RGB LED BAR KIT	Code / Description / Qty / UOM VM1059A1 / HEAT SHRINK FILM H800 / 1 / M VM2147A0 / 410X343X15 MM PINK SMOOTH ESD SPONGE / 1 / PZ VP1026A0 / MW LED COVE / 1 / PZ
LP1055A	SPEED PRO RGB LED BAR		KLP1055A	SPEED PRO RGB LED BAR KIT	Code / Description / Qty / UOM CE1053B0 / MM MICROFIT LED BAR POWER SUPPLY CABL / 1 / PZ GN1682A0 / / 1 / PZ IP1385A1 / CORNER POLYSTYRENE PACKING 110X80X2000 / 1 / M LP1055A0 / SPEED PRO RGB LED BAR / 1 / PZ VM1059A1 / HEAT SHRINK FILM H800 / 1 / M VM2147A0 / 410X343X15 MM PINK SMOOTH ESD SPONGE / 1 / PZ VP1026A0 / MW LED COVE / 1 / PZ
VP1022A	MW DOOR LEFT UPPER CAP		KVP1022A		Code / Description / Qty / UOM VM1224A0 / 65MY 220MM 2 COLOURS SHRINK TUBE / 0.200 / M VP1022A0 / MW DOOR LEFT UPPER CAP / 1 / PZ
VP1026A	MW LED COVER		VP1026A0	MW LED COVER	

COMPONENT			SPARE PART		
Code	*Description*	*Image*	*Code*	*Description*	*Components list*
VI2043A	5X40 ST. STEEL SCREW FOR PLASTI		VI2043A0	5X40 ST. STEEL SCREW FOR PLASTI	
VP1023A	MW DOOR RIGHT UPPER CAP		KVP1023A		Code / Description / Qty / UOM VM1224A0 / 65MY 220MM 2 COLOURS SHRINK TUBE / 0.200 / M VP1023A0 / MW DOOR RIGHT UPPER CAP / 1 / PZ
0H5266A			0H5266A1		
0H5269A			0H5269A1		
0H5270A			0H5270A1		

COMPONENT			SPARE PART		
Code	*Description*	*Image*	*Code*	*Description*	*Components list*
0H2689B			0H2689B0		
0H5267A			0H5267A1		
0H5268B			0H5268B0		
GN1432B			KGN1432B		Code / Description / Qty / UOM GN1432B1 / 1 / PZ

ASM3199A/0.D01 - Cooking chamber

FRONT

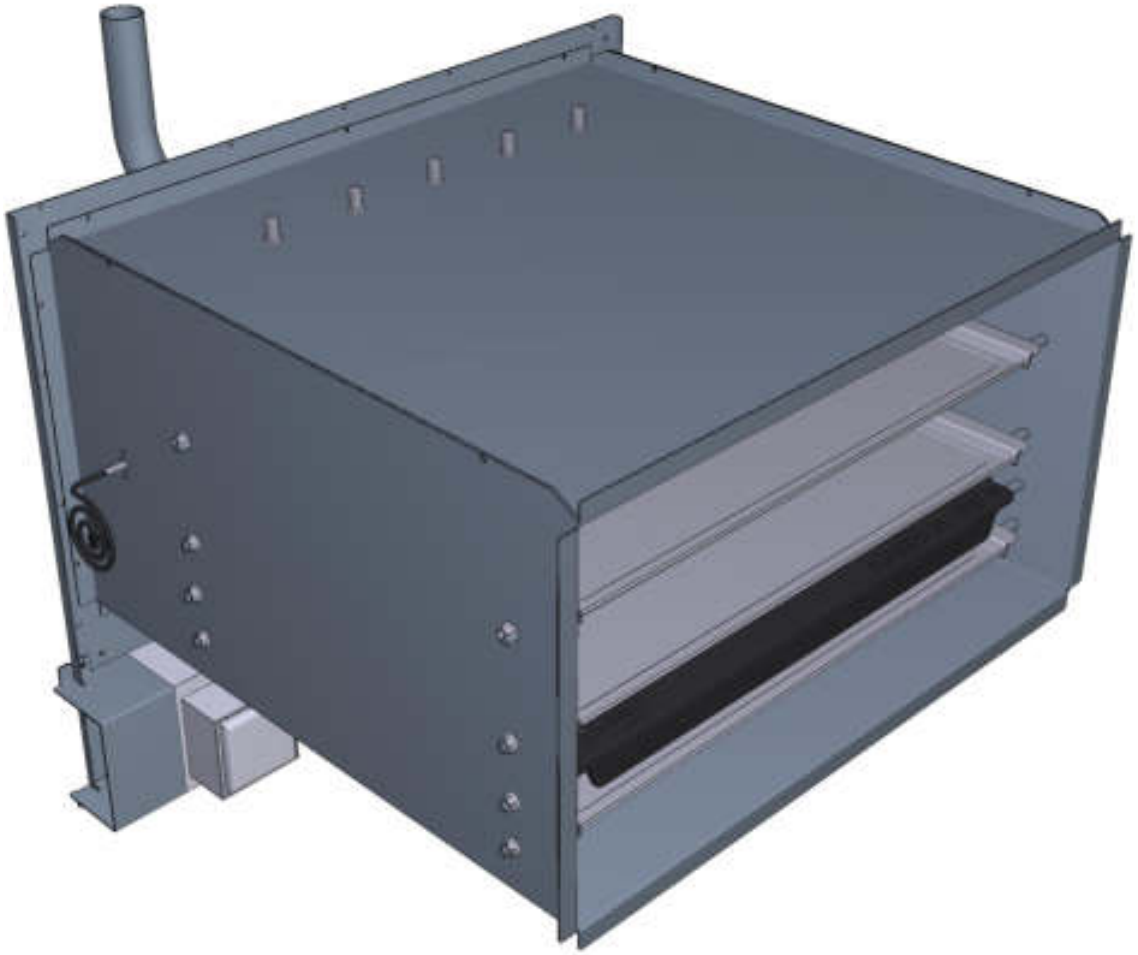

ASM3199A/0.D01 - Cooking chamber

REAR

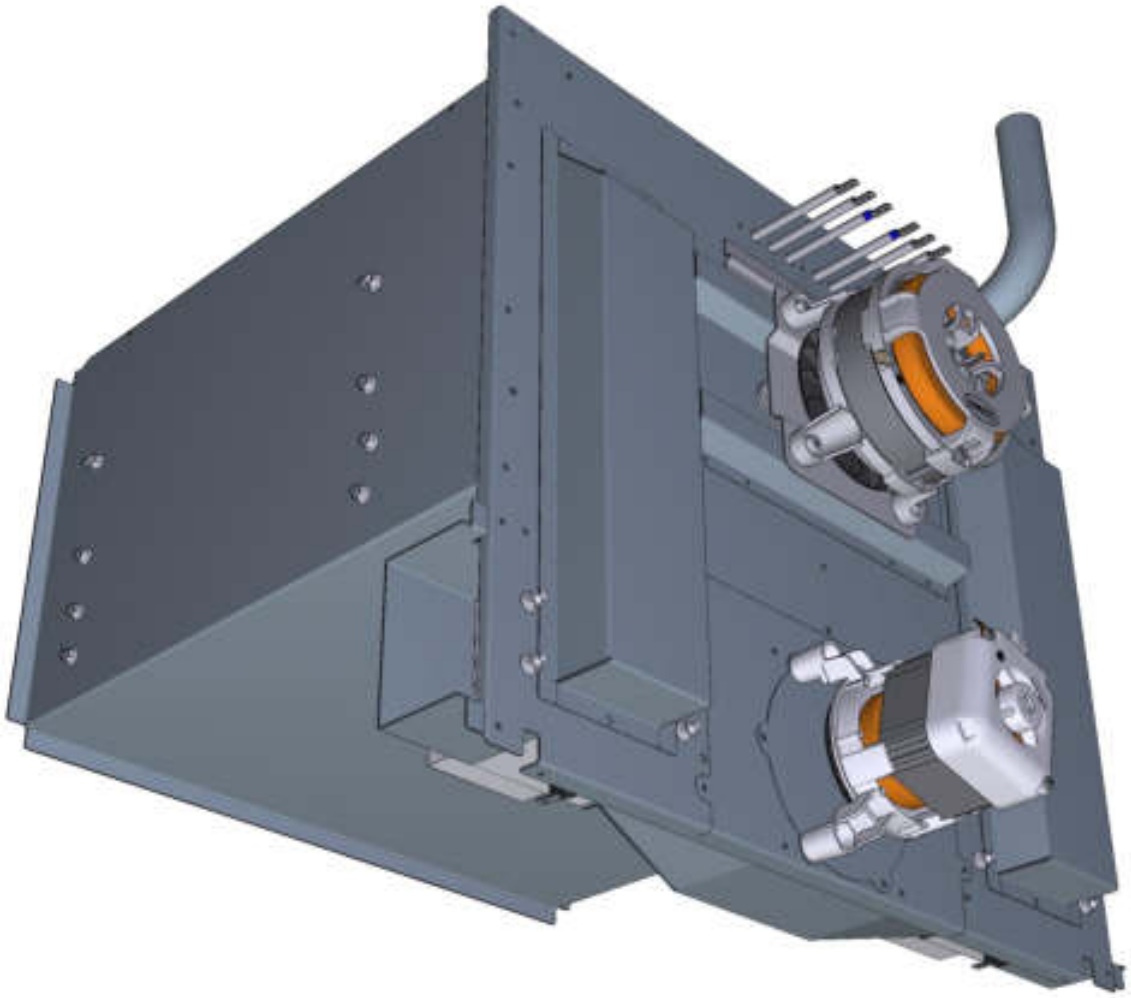

COMPONENT			SPARE PART		
Code	*Description*	*Image*	*Code*	*Description*	*Components list*
ATG305	TRAY 460X330 FLAT ALUMINIUM		ATG3050	TRAY 460X330 FLAT ALUMINIUM	
TR1105A	L1000 PT100 TEMPERATURE PROBE		KTR1105A	PT100 L1000 TEMPERATURE PROBE KIT	Code / Description / Qty / UOM GN1120A0 NTC TEMPERATURE PROBE SEAL 1 PZ GN1120A1 NTC TEMPERATURE PROBE SEAL 1 PZ GN1285A0 NTC TEMPERATURE PROBE SEALING 1 PZ MOV0010A0 HOOD RING GASKET GN1110A2 0.100 PZ SL1045A0 S57 BLACK SILICONE - 80ML CARTRIDGE 1 PZ TR1105A4 L1000 PT100 TEMPERATURE PROBE 1 PZ VI1220A1 4,2X12 TCB SELF-TAPPING SCREW 2 PZ VM1464A1 CT BT TEMPERATURE PROBE COVER 1 PZ VM1465A1 CT BT TEMPERATURE PROBE COVER 1 PZ VM2052A0 LM CORE PROBE COVE 1 PZ
0H5252A			0H5252A1		

COMPONENT			SPARE PART		
Code	*Description*	*Image*	*Code*	*Description*	*Components list*
MT1012A	330W 230V MOTOR		KVN1130A	LUX =08.2017/S.5/S.5E 330W MOTOR KIT	**Code / Description / Qty / UOM** 0H4305A1 ST. STEEL MOTOR SHAFT SEALING DISC 1 PZ GN1140A2 MOTOR HOLDER GASKET 1 PZ GN1140A3 MOLDED MOTOR HOLDER GASKET 1 PZ VI1045A0 16X8,4 TH=1,6 ST.STEEL WASHER 1 PZ VI1256A0 M8 DIN 980M ST. STEEL SELF LOCKING NUT 1 PZ VM1794A0 250X4.8 PA66 BLACK CLAMP 4 PZ VM2103A0 CLAMP LOCK 4 PZ VM2196A0 MOTOR NUT FASTENING BUSHING 1 PZ VN1130A1 330W 230V 50/60HZ MOTO 1 PZ VN1130A1 330W 230V 50/60HZ MOTO 1 PZ
			KMT1012A	MIND.MAPS 330W 230V MOTOR KIT	**Code / Description / Qty / UOM** 0H2842A0 1 PZ 0H4305A1 ST. STEEL MOTOR SHAFT SEALING DISC 1 PZ GN1140A2 MOTOR HOLDER GASKET 1 PZ GN1140A3 MOLDED MOTOR HOLDER GASKET 1 PZ MOV0007A0 HOOD RING GASKET GN1110A2 0.100 PZ MT1012A0 330W 230V MOTOR 1 PZ VE1550A0 5X3 MM NEODYMIUM MAGNET 1 PZ VI1077A1 SCREW M6X12 TE INOX 1 PZ

COMPONENT			SPARE PART		
Code	*Description*	*Image*	*Code*	*Description*	*Components list*
MT1012A	330W 230V MOTOR		KMT1012A	MIND.MAPS 330W 230V MOTOR KIT	Code / Description / Qty / UOM VI1521A0 STAINLESS STEEL WASHER D=6 6592 1 PZ VI1966A0 M4X14 FLATHEAD SCREW 1 PZ VM1635A0 MAGNET HOLDING DIS 1 PZ VM1794A0 250X4.8 PA66 BLACK CLAMP 4 PZ VM2103A0 CLAMP LOCK 4 PZ
VN1171A	D195 H60 8 BLADES FAN		KVN1171A	D195 H60 8 BLADES M8 NUT FAN KIT	Code / Description / Qty / UOM VI1077A1 SCREW M6X12 TE INOX 1 PZ VI1521A0 STAINLESS STEEL WASHER D=6 6592 1 PZ VN1171A0 D195 H60 8 BLADES FAN 1 PZ VN1171A0 D195 H60 8 BLADES FAN 1 PZ
GN1547A	SHAFT GASKET D11.8		KGN1547A	D11.6 MOTOR SHAFT GASKET 3PCS KIT	Code / Description / Qty / UOM GN1547A1 SHAFT GASKET D11.8 3 PZ VM1224A0 65MY 220MM 2 COLOURS SHRINK TUBE 0.200 M
0H3020A	MOTOR SHAFT SEALING DISC		0H3020A1	MOTOR SHAFT SEALING DISC	

COMPONENT			SPARE PART		
Code	*Description*	*Image*	*Code*	*Description*	*Components list*
0H5245A			0H5245A0		
VM1462A			VM1462A0		
VM1441A			VM1441A1		
VM1442A			VM1442A1		
VN1035B	LINE MISS 230 VAC MOTOR		KVN1035B	LINEMISS / LINEMICRO MOTOR KIT	

Code	Description	Qty	UOM
GN1270A0	13X5.5X0.8 FLAT WASHER	3	PZ
GN1546A0	SHAFT GASKET D8	1	PZ
VI1695A0	M6X16 H6 CH10 STAINLESS STEEL NUT	1	PZ
VI1700A0	18X6.4X1.5 STAINLESS STEEL FLAT WASHER	1	PZ
VI1836A0	M6X12 OT63 ROTOR SCRE	3	PZ

COMPONENT			SPARE PART		
Code	*Description*	*Image*	*Code*	*Description*	*Components list*
VN1035B	LINE MISS 230 VAC MOTOR		KVN1035B	LINEMISS / LINEMICRO MOTOR KIT	Code / Description / Qty / UOM VM1794A0 / 250X4.8 PA66 BLACK CLAMP / 3 / PZ VM2103A0 / CLAMP LOCK / 3 / PZ VN1035B1 / LINE MISS 230 VAC MOTOR / 1 / PZ VN1035B1 / LINE MISS 230 VAC MOTOR / 1 / PZ
0H5246A			0H5246A1		
VI1110A	AUTOBLOCKING NUT STAINLESS STEEL		VI1110A0	AUTOBLOCKING NUT STAINLESS STEEL	
VN1182A	M6 NUT 24 BLADES H60 D120 FAN		KVN1182A	SPEED.PRO COOLING FAN KIT	Code / Description / Qty / UOM VI1110A0 / AUTOBLOCKING NUT STAINLESS STEEL / 1 / PZ VN1182A0 / M6 NUT 24 BLADES H60 D120 FAN / 1 / PZ
0H5247A			0H5247A1		

COMPONENT			SPARE PART		
Code	*Description*	*Image*	*Code*	*Description*	*Components list*
0H5248A			0H5248A1		
RS1018A	2X1600W 230V+210W CIRCULAR HEAT. ELEMENT		KRS1018A	SPEED.PRO HEATING ELEMENT KIT	**Code** / **Description** / **Qty** / **UOM** GN1671A0 / 141X22 G8.5 ELEMENT ARMED GASKET / 1 / PZ RS1018A0 / 2X1600W 230V+210W CIRCULAR HEAT. ELEMENT / 1 / PZ VI1220A1 / 4,2X12 TCB SELF-TAPPING SCREW / 6 / PZ VM1794A0 / 250X4.8 PA66 BLACK CLAMP / 2 / PZ VM2103A0 / CLAMP LOCK / 2 / PZ
TB2714A	BAFFLE CHIMNEY		TB2714A1	BAFFLE CHIMNEY	
TR1164A			KTR1164A	SPEED.PRO THERMOSTAT KIT	**Code** / **Description** / **Qty** / **UOM** TR1164A0 / / 1 / PZ VM1224A0 / 65MY 220MM 2 COLOURS SHRINK TUBE / 0.200 / M

COMPONENT			SPARE PART		
Code	*Description*	*Image*	*Code*	*Description*	*Components list*
VE1800A			KVE1800A	SPEED.PRO 1080W MAGNETRON KIT	Code / Description / Qty / UOM TR1164A0 / / 1 / PZ VE1800A0 / / 1 / PZ VI2037A1 / 40X8 TORX SHEETTRACS SELF-THREAD SCREW / 2 / PZ
VI1126A			VI1126A0		
VI1127A			VI1127A0		
VM1443A	SPEED.PRO CATALYTIC CONVERTER		KVM1443A	SPEED.PRO CATALYTIC CONVERTER 2PCS KIT	Code / Description / Qty / UOM VI1127A0 / / 4 / PZ VM1443A0 / SPEED.PRO CATALYTIC CONVERTER / 2 / PZ
0G1076A			0G1076A1		

COMPONENT			SPARE PART		
Code	*Description*	*Image*	*Code*	*Description*	*Components list*
0H5253B			0H5253B0		
GN1430B			GN1430B0		

ASM3226A/0.D02 - External cover

FRONT



ASM3226A/0.D02 - External cover

REAR



ASM3226A/0.D02 External cover

COMPONENT			SPARE PART		
Code	*Description*	*Image*	*Code*	*Description*	*Components list*
VM1750A	BRASS COMB CLAM		KVM1750A	COMB TERMINAL BLOCK KIT	Code / Description / Qty / UOM VM1224A0 — 65MY 220MM 2 COLOURS SHRINK TUBE — 0.150 — M VM1750A0 — BRASS COMB CLAMP — 1 — PZ
VE1607A	RUBBER MAGNETIC SUCTION CUP		KVE1607A	MAGNETIC SUCTION CUP	Code / Description / Qty / UOM VE1607A1 — RUBBER MAGNETIC SUCTION CUP — 2 — PZ VI1700A0 — 18X6.4X1.5 STAINLESS STEEL FLAT WASHER — 2 — PZ VM1224A0 — 65MY 220MM 2 COLOURS SHRINK TUBE — 0.200 — M
CE1355A	CABLE 5 X 2,5 MMQ H07RNF L = 1,5 MT		KCE1355A	L=1.5M 5X2.5MMQ POWER CABLE KIT	Code / Description / Qty / UOM CE1355A1 — CABLE 5 X 2,5 MMQ H07RNF L = 1,5 MT — 1 — PZ VM1224A0 — 65MY 220MM 2 COLOURS SHRINK TUBE — 0.350 — M
VM1222A	CABLE LOCKS SP ACCESSORIES EL CONNECTION		VM1222A0	CABLE LOCKS SP ACCESSORIES EL CONNECTION	
VM1631A	PLUS INNER GLASS PUSHING CAP		KVM1631A	CAP FOR INTERNAL GLASS 10 PCS KIT	Code / Description / Qty / UOM VM1224A0 — 65MY 220MM 2 COLOURS SHRINK TUBE — 0.200 — M VM1631A0 — PLUS INNER GLASS PUSHING CAP — 10 — PZ

COMPONENT			SPARE PART		
Code	*Description*	*Image*	*Code*	*Description*	*Components list*
VI1328A			VI1328A0		
TR1136A	330°C 1 POLE SAFETY THERMOSTAT		KTR1136A	330°C SAFETY THERMOSTAT KIT	
0D2491A			0D2491A1		
0D2492A			0D2492A1		

Code	Description	Qty	UOM
0H7030A0	THERMOSTAT BULB INLET COVER	1	PZ
GN1531A0	THERMOSTAT BULB INLET SEALING	1	PZ
MOV0011A0	HOOD RING GASKET GN1110A2	0.100	PZ
SL1045A0	S57 BLACK SILICONE - 80ML CARTRIDGE	1	PZ
TR1136A0	330°C 1 POLE SAFETY THERMOSTAT	1	PZ
VI1220A1	4,2X12 TCB SELF-TAPPING SCREW	3	PZ



ASM3226A/0.D02 External cover

COMPONENT			SPARE PART		
Code	*Description*	*Image*	*Code*	*Description*	*Components list*
0D2493A			0D2493A1		
0H2919A			0H2919A0		
0H2597A			0H2597A0		
0H5254A			0H5254A1		
0H5255A			0H5255A1		

ASM3226A/0.D02 External cover

COMPONENT			SPARE PART		
Code	*Description*	*Image*	*Code*	*Description*	*Components list*
0H5256A			0H5256A1		
0H5258A			0H5258A1		
0H5274A			0H5274A1		
VE1820A			KVE1820A	SPEED.PRO DOOR MICROSWITCH 2PCS KIT	

Code	Description	Qty	UOM
0H5274A1		2	PZ
CE1030A0	FEMALE FASTON COVER 6.3X0.8 0,5-1MMQ	6	PZ
CE1205A0	FEMALE INAR-LOCK END CONNECTOR	9	PZ
CE1210A0	5 WAYS FEMALE INAR-LOCK CONNECTOR	1	PZ
CE1335A0	4 WAYS MALE INAR-LOCK CONNECTOR	1	PZ
CE1340A0	5 WAYS MALE INAR-LOCK CONNECTOR	1	PZ
CE1350A0	MALE INAR-LOCK END CONNECTOR	5	PZ

COMPONENT			SPARE PART		
Code	*Description*	*Image*	*Code*	*Description*	*Components list*
VE1820A			KVE1820A	SPEED.PRO DOOR MICROSWITCH 2PCS KIT	Code / Description / Qty / UOM CE1540A0 BROWN UNIP AWG18 ST.3135 WIRE 0.500 M CE1545A0 BLUE UNIP AWG18 ST.3135 WIRE 1.950 M CE1555A0 YELLOW UNIP AWG18 ST.3135 WIRE 1.100 M CE1560A0 BALCK UNIP AWG18 ST.3135 WIRE 1.900 M CE1565A0 RED UNIP AWG18 ST.3135 WIRE 1 M CE1660A0 6,3X0,8 FEMALE FASTON COVE 6 PZ RC1130A0 130X2,6 CLAM 5 PZ VE1820A0 1 PZ VE1825A0 1 PZ VI2037A1 40X8 TORX SHEETTRACS SELF-THREAD SCREW 4 PZ VP1027A0 MW MICROSWITCH SUPPORT 2 PZ VP1028A0 MICRO MW FIXING CAP 4 PZ
VP1027A	MW MICROSWITCH SUPPORT		KVP1027A	MW DOOR MICROSWITCH HOLDER 2 PCS KIT	Code / Description / Qty / UOM VI2037A1 40X8 TORX SHEETTRACS SELF-THREAD SCREW 4 PZ VM1224A0 65MY 220MM 2 COLOURS SHRINK TUBE 0.200 M VP1027A0 MW MICROSWITCH SUPPORT 2 PZ VP1028A0 MICRO MW FIXING CAP 4 PZ
VP1028A	MICRO MW FIXING CAP		VP1028A0	MICRO MW FIXING CAP	

COMPONENT			SPARE PART		
Code	*Description*	*Image*	*Code*	*Description*	*Components list*
0H5274A			0H5274A1		
VP1027A	MW MICROSWITCH SUPPORT		KVP1027A	MW DOOR MICROSWITCH HOLDER 2 PCS KIT	**Code** / **Description** / **Qty** / **UOM** VI2037A1 / 40X8 TORX SHEETTRACS SELF-THREAD SCREW / 4 / PZ VM1224A0 / 65MY 220MM 2 COLOURS SHRINK TUBE / 0.200 / M VP1027A0 / MW MICROSWITCH SUPPORT / 2 / PZ VP1028A0 / MICRO MW FIXING CAP / 4 / PZ
VP1028A	MICRO MW FIXING CAP		VP1028A0	MICRO MW FIXING CAP	
VE1825A			KVE1820A	SPEED.PRO DOOR MICROSWITCH 2PCS KIT	**Code** / **Description** / **Qty** / **UOM** 0H5274A1 / / 2 / PZ CE1030A0 / FEMALE FASTON COVER 6.3X0.8 0,5-1MMQ / 6 / PZ CE1205A0 / FEMALE INAR-LOCK END CONNECTOR / 9 / PZ CE1210A0 / 5 WAYS FEMALE INAR-LOCK CONNECTOR / 1 / PZ CE1335A0 / 4 WAYS MALE INAR-LOCK CONNECTOR / 1 / PZ CE1340A0 / 5 WAYS MALE INAR-LOCK CONNECTOR / 1 / PZ

ASM3226A/0.D02 External cover

COMPONENT			SPARE PART		
Code	*Description*	*Image*	*Code*	*Description*	*Components list*
VE1825A			KVE1820A	SPEED.PRO DOOR MICROSWITCH 2PCS KIT	
VE1295A	MK 16A 230V DOOR MICROSWITCH		KVE1295A	16A 230V DOOR MICROSWITCH KIT	
VM1200A	DOOR MECHANIC MICROSWITCH SUPPORT PLATE		VM1200A0	DOOR MECHANIC MICROSWITCH SUPPORT PLATE	

Components list — KVE1820A

Code	Description	Qty	UOM
CE1350A0	MALE INAR-LOCK END CONNECTOR	5	PZ
CE1540A0	BROWN UNIP AWG18 ST.3135 WIRE	0.500	M
CE1545A0	BLUE UNIP AWG18 ST.3135 WIRE	1.950	M
CE1555A0	YELLOW UNIP AWG18 ST.3135 WIRE	1.100	M
CE1560A0	BALCK UNIP AWG18 ST.3135 WIRE	1.900	M
CE1565A0	RED UNIP AWG18 ST.3135 WIRE	1	M
CE1660A0	6,3X0,8 FEMALE FASTON COVE	6	PZ
RC1130A0	130X2,6 CLAM	5	PZ
VE1820A0		1	PZ
VE1825A0		1	PZ
VI2037A1	40X8 TORX SHEETTRACS SELF-THREAD SCREW	4	PZ
VP1027A0	MW MICROSWITCH SUPPORT	2	PZ
VP1028A0	MICRO MW FIXING CAP	4	PZ

Components list — KVE1295A

Code	Description	Qty	UOM
VE1295A0	MK 16A 230V DOOR MICROSWITC	1	PZ
VM1224A0	65MY 220MM 2 COLOURS SHRINK TUBE	0.300	M

ASM3226A/0.D02 External cover

COMPONENT			SPARE PART		
Code	*Description*	*Image*	*Code*	*Description*	*Components list*
VP1028A	MICRO MW FIXING CAP		VP1028A0	MICRO MW FIXING CAP	
VP1049A	MW AIR EXHAUST GRID		KVP1049A	SPEED.PRO AIR OUTLET GRID KIT	Code / Description / Qty / UOM VI2037A1 / 40X8 TORX SHEETTRACS SELF-THREAD SCREW / 1 / PZ VM1224A0 / 65MY 220MM 2 COLOURS SHRINK TUBE / 0.200 / M VP1049A0 / MW AIR EXHAUST GRI / 1 / PZ
VN1165A	230VAC 50/60HZ COOLING DOWN FA		KVN1165A	S.5E ADVANCE/MM 230V COOLING FAN KIT	Code / Description / Qty / UOM MOV0017A0 / HOOD RING GASKET GN1110A2 / 0.100 / PZ VI1099A0 / SELF-DRILLING SCREW 4.8X13 TCB+ Z / 4 / PZ VM1555A2 / CT BT COOLING FAN SUPPORT / 1 / PZ VN1165A0 / 230VAC 50/60HZ COOLING DOWN FAN / 1 / PZ VN1165A0 / 230VAC 50/60HZ COOLING DOWN FAN / 1 / PZ
0H2598A		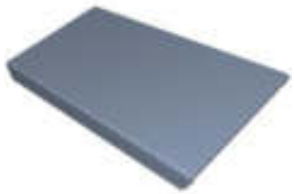	0H2598A0		

COMPONENT			SPARE PART		
Code	*Description*	*Image*	*Code*	*Description*	*Components list*
GN1680A			GN1680A0		
0H5260A			0H5260A1		
VN1165A	230VAC 50/60HZ COOLING DOWN FA		KVN1165A	S.5E ADVANCE/MM 230V COOLING FAN KIT	Code / Description / Qty / UOM MOV0017A0 HOOD RING GASKET GN1110A2 0.100 PZ VI1099A0 SELF-DRILLING SCREW 4.8X13 TCB+ Z 4 PZ VM1555A2 CT BT COOLING FAN SUPPORT 1 PZ VN1165A0 230VAC 50/60HZ COOLING DOWN FAN 1 PZ VN1165A0 230VAC 50/60HZ COOLING DOWN FAN 1 PZ
0H2598A		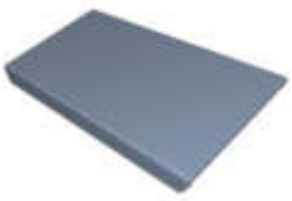	0H2598A0		

COMPONENT			SPARE PART		
Code	*Description*	*Image*	*Code*	*Description*	*Components list*
GN1680A			GN1680A0		
0H5259A			0H5259A1		
GN1431A			GN1431A1		
ML1018A	L0 80 K0.32 DM 11.8 TRACTION SPRING		KML1019A	SPEED.PRO HINGE SPRINGS KIT	Code / Description / Qty / UOM ML1018B0 / / 2 / PZ ML1019A0 / L0166 K0.38 DM21.8 TRACTION SPRING / 2 / PZ VM1224A0 / 65MY 220MM 2 COLOURS SHRINK TUBE / 0.300 / M
ML1019A	L0166 K0.38 DM21.8 TRACTION SPRING		KML1019A	SPEED.PRO HINGE SPRINGS KIT	Code / Description / Qty / UOM ML1018B0 / / 2 / PZ ML1019A0 / L0166 K0.38 DM21.8 TRACTION SPRING / 2 / PZ VM1224A0 / 65MY 220MM 2 COLOURS SHRINK TUBE / 0.300 / M

ASM3226A/0.D02 External cover

COMPONENT			SPARE PART		
Code	*Description*	*Image*	*Code*	*Description*	*Components list*
VI1136A	M5 UNI-1751 ST.STEEL SPRING WASHER		VI1136A0	M5 UNI-1751 ST.STEEL SPRING WASHER	
VM2455A			KVM2455A	BL SP CONTR BOARD PASSAGE CABLE CLIP KIT	Code / Description / Qty / UOM VM1224A0 / 65MY 220MM 2 COLOURS SHRINK TUBE / 0.150 / M VM2455A0 / BL SP CONTROL BOARD CABLE PASSAGE CLI / 1 / PZ VM2455A0 / BL SP CONTROL BOARD CABLE PASSAGE CLI / 1 / PZ
0E1029A			0E1029A1		
0H5285A			K0H5285A	SPEED.PRO FRONT AIR FILTER KIT	Code / Description / Qty / UOM 0H5285A0 / / 1 / PZ
VM1609A			KVM1609A	SPEED.PRO MOTOR ANTI VIBRATION KIT	Code / Description / Qty / UOM VI1220A1 / 4,2X12 TCB SELF-TAPPING SCREW / 1 / PZ VM1120A0 / CONE-SHAPED CAP TO CLOSE Ø30 PIPE / 1 / PZ VM1224A0 / 65MY 220MM 2 COLOURS SHRINK TUBE / 0.200 / M

COMPONENT			SPARE PART		
Code	*Description*	*Image*	*Code*	*Description*	*Components list*
0F1038A			0F1038A3		
VM1570A	SPEED.PRO RIGHT HINGE SET		KVM1570A		
			KCR1131A	SPEED.PRO RIGHT HINGE KIT	

Code	Description	Qty	UOM
0H2597A0		1	PZ
VI1136A0	M5 UNI-1751 ST.STEEL SPRING WASHER	8	PZ
VI1280A1	SCREW M5X10 TC1/2T COMBI ZN 12	8	PZ
VM1224A0	65MY 220MM 2 COLOURS SHRINK TUBE	0.250	M
VM1570A0	SPEED.PRO RIGHT HINGE SET	1	PZ

Code	Description	Qty	UOM
0H2574A0		1	PZ
0H2597A0		1	PZ
0H2918A0		1	PZ
0H2919A0		1	PZ
ML1018A0	L0 80 K0.32 DM 11.8 TRACTION SPRING	1	PZ
ML1019A0	L0166 K0.38 DM21.8 TRACTION SPRING	1	PZ
VI1070A0	SCREW M4X16 TSP/UNI7688 INOX	2	PZ
VI1074A0	4X16 SCREW FOR PLASTIC	3	PZ
VI1136A0	M5 UNI-1751 ST.STEEL SPRING WASHER	8	PZ
VI1280A1	SCREW M5X10 TC1/2T COMBI ZN 12	8	PZ
VI1875A0	SCREW M5X10 TC1/2T INOX	7	PZ
VM1524A0	D 24 D 8 B 8 MW HINGE BEARING	2	PZ

COMPONENT			SPARE PART		
Code	*Description*	*Image*	*Code*	*Description*	*Components list*
VM1570A	SPEED.PRO RIGHT HINGE SET		KCR1131A	SPEED.PRO RIGHT HINGE KIT	Code / Description / Qty / UOM VM1533A0 SPEED.PRO DOOR FULCRUM PIN 1 PZ VM1534A0 SPEED.PRO DOOR HOLDER BEARING PIN 1 PZ VM1570A0 SPEED.PRO RIGHT HINGE SET 1 PZ VP1077A0 MW HINGES BALL-BEARING CARRIER 1 PZ
VM1571A	SPEED.PRO LEFT HINGE SET		KVM1571A		Code / Description / Qty / UOM 0H2597A0 1 PZ VI1136A0 M5 UNI-1751 ST.STEEL SPRING WASHER 8 PZ VI1280A1 SCREW M5X10 TC1/2T COMBI ZN 12 8 PZ VM1224A0 65MY 220MM 2 COLOURS SHRINK TUBE 0.250 M VM1571A0 SPEED.PRO LEFT HINGE SET 1 PZ
			KCR1130A	SPEED.PRO LEFT HINGE KIT	Code / Description / Qty / UOM 0H2574A0 1 PZ 0H2597A0 1 PZ 0H2918A0 1 PZ 0H2919A0 1 PZ ML1018A0 L0 80 K0.32 DM 11.8 TRACTION SPRING 1 PZ ML1019A0 L0166 K0.38 DM21.8 TRACTION SPRING 1 PZ VI1070A0 SCREW M4X16 TSP/UNI7688 INOX 2 PZ VI1074A0 4X16 SCREW FOR PLASTIC 3 PZ VI1136A0 M5 UNI-1751 ST.STEEL SPRING WASHER 8 PZ VI1280A1 SCREW M5X10 TC1/2T COMBI ZN 12 8 PZ

ASM3226A/0.D02 External cover

COMPONENT			SPARE PART		
Code	*Description*	*Image*	*Code*	*Description*	*Components list*
VM1571A	SPEED.PRO LEFT HINGE SET		KCR1130A	SPEED.PRO LEFT HINGE KIT	Code / Description / Qty / UOM VI1875A0 SCREW M5X10 TC1/2T INOX 7 PZ VM1524A0 D 24 D 8 B 8 MW HINGE BEARING 2 PZ VM1533A0 SPEED.PRO DOOR FULCRUM PIN 1 PZ VM1534A0 SPEED.PRO DOOR HOLDER BEARING PIN 1 PZ VM1571A0 SPEED.PRO LEFT HINGE SET 1 PZ VP1077A0 MW HINGES BALL-BEARING CARRIER 1 PZ
VM2484A	ELECTRICAL CONNECTION CABLE CLAMP		KVM2484A	CABLE LOCKS ELECTRICAL CONNECTION KIT	Code / Description / Qty / UOM VM1224A0 65MY 220MM 2 COLOURS SHRINK TUBE 0.300 M VM2484A0 ELECTRICAL CONNECTION CABLE CLAMP 1 PZ VM2484A0 ELECTRICAL CONNECTION CABLE CLAMP 1 PZ
			KVM2482A	BAKERLUX SP ELECTR COMPONENTS HOLDER KIT	Code / Description / Qty / UOM VM1224A0 65MY 220MM 2 COLOURS SHRINK TUBE 0.300 M VM2482A0 ELECTR COMPONENTS HOLDER FRAME SHOP.PRO 1 PZ VM2482A0 ELECTR COMPONENTS HOLDER FRAME SHOP.PRO 1 PZ VM2484A0 ELECTRICAL CONNECTION CABLE CLAMP 1 PZ VM2484A0 ELECTRICAL CONNECTION CABLE CLAMP 1 PZ

ASM3226A/0.D02 External cover

COMPONENT			SPARE PART		
Code	*Description*	*Image*	*Code*	*Description*	*Components list*
VM2482A	ELECTR COMPONENTS HOLDER FRAME SHOP.PRO		KVM2482A	BAKERLUX SP ELECTR COMPONENTS HOLDER KIT	Code / Description / Qty / UOM VM1224A0 — 65MY 220MM 2 COLOURS SHRINK TUBE — 0.300 — M VM2482A0 — ELECTR COMPONENTS HOLDER FRAME SHOP.PRO — 1 — PZ VM2482A0 — ELECTR COMPONENTS HOLDER FRAME SHOP.PRO — 1 — PZ VM2484A0 — ELECTRICAL CONNECTION CABLE CLAMP — 1 — PZ VM2484A0 — ELECTRICAL CONNECTION CABLE CLAMP — 1 — PZ
VM2490A	460X330 SP EXT FRONT BOTTOM GASKET		KVM2490A	SP 460X330 EXT BOTTOM PANEL GASKET KIT	Code / Description / Qty / UOM VM1794A0 — 250X4.8 PA66 BLACK CLAMP — 1 — PZ VM2103A0 — CLAMP LOCK — 1 — PZ VM2490A0 — 460X330 SP EXT FRONT BOTTOM GASKET — 2 — PZ VM2490A0 — 460X330 SP EXT FRONT BOTTOM GASKET — 2 — PZ
VM2483A	SHOP PRO COMPONENTS HOLDER COVER		KVM2483A	BL SHOP.PRO COMPONENTS HOLDER COVER KIT	Code / Description / Qty / UOM VM1224A0 — 65MY 220MM 2 COLOURS SHRINK TUBE — 0.300 — M VM2483A0 — COMPONENTS HOLDER COVER SHOP.PRO — 1 — PZ VM2483A0 — COMPONENTS HOLDER COVER SHOP.PRO — 1 — PZ VM2483A1 — SHOP PRO COMPONENTS HOLDER COVER — 1 — PZ

ASM3226A/0.D02 External cover

COMPONENT			SPARE PART		
Code	*Description*	*Image*	*Code*	*Description*	*Components list*
VM2491A	SP600 LATERAL BOTTOM PANEL GASKET		KVM2491A	SP 460X330 LAT BOTT PANEL GASKET 2PC KIT	

Code	Description	Qty	UOM
VM1631A0	PLUS INNER GLASS PUSHING CAP	4	PZ
VM1794A0	250X4.8 PA66 BLACK CLAMP	1	PZ
VM2103A0	CLAMP LOCK	1	PZ
VM2491A0	460X330 BL SP LATER BOTTOM PANEL GASKE	2	PZ
VM2491A0	460X330 BL SP LATER BOTTOM PANEL GASKE	2	PZ
VM2491A1	SP600 LATERAL BOTTOM PANEL GASKE	2	PZ

VP1029A			KVP1029A		

Code	Description	Qty	UOM
VM1224A0	65MY 220MM 2 COLOURS SHRINK TUBE	0.200	M
VP1029A0		2	PZ

VP1074A			VP1074A0		

ASM3244A/0.D01 - Electrical system

FRONT

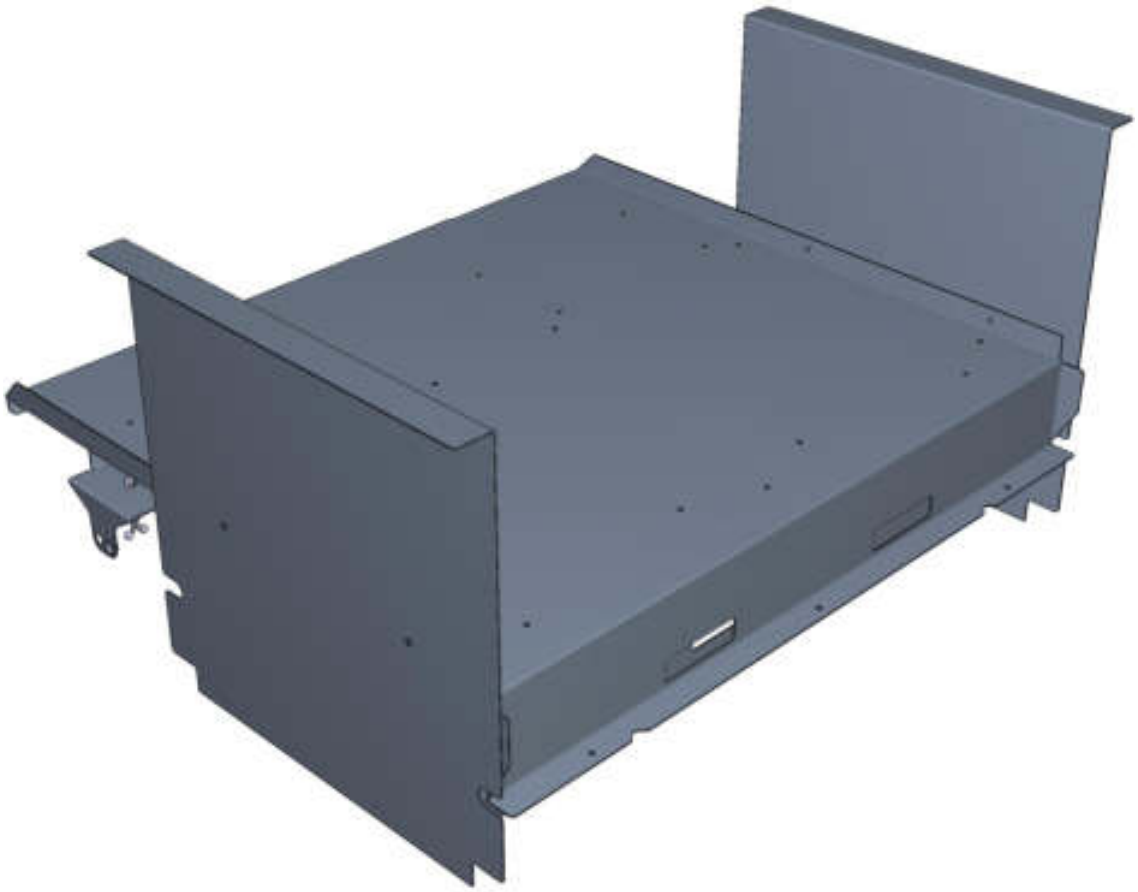

ASM3244A/0.D01 - Electrical system

REAR

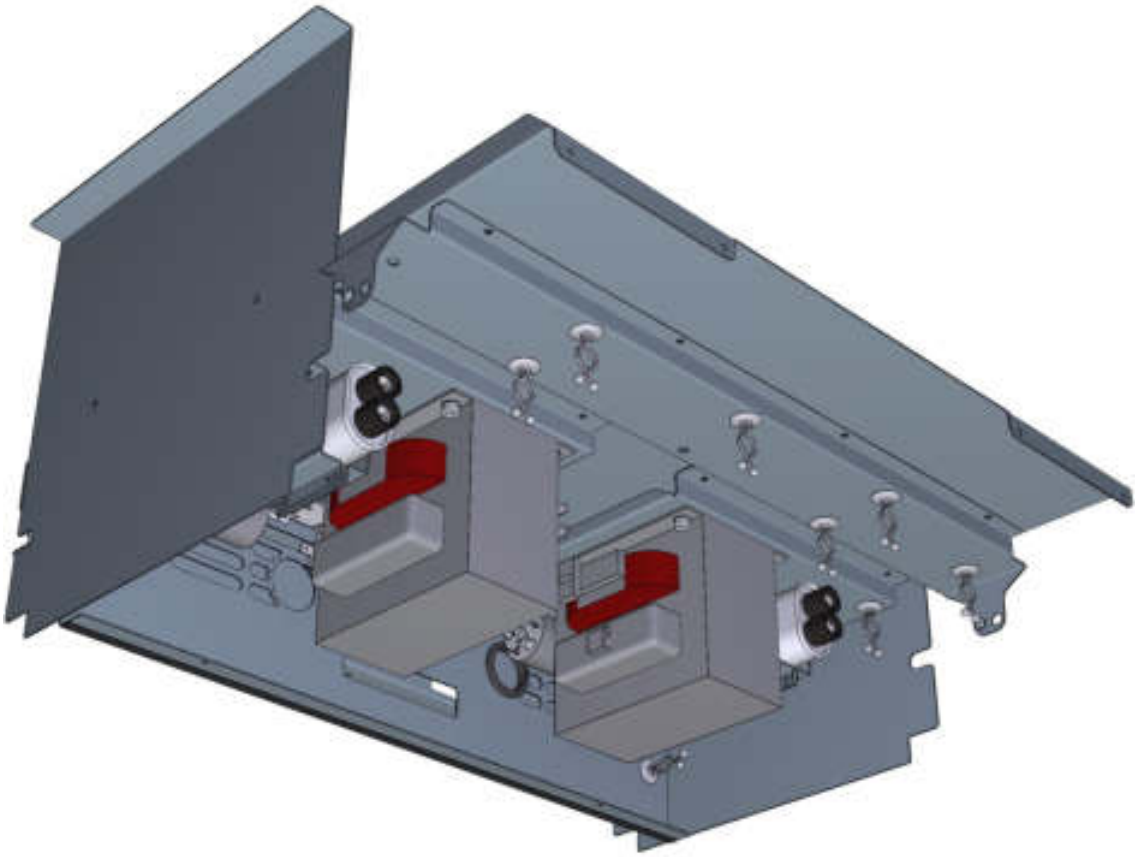

COMPONENT			SPARE PART		
Code	*Description*	*Image*	*Code*	*Description*	*Components list*
0H2828A			0H2828A0		
0H5287A			0H5287A0		
GN1681A			GN1681A0		
0H5261B		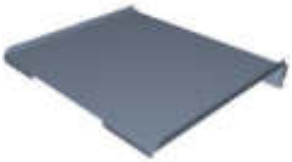	0H5261B0		
0H5275B			0H5275B0		

COMPONENT			SPARE PART		
Code	*Description*	*Image*	*Code*	*Description*	*Components list*
VI1113A	ST.STEEL TCEI M6X12 SCREW		VI1113A0	ST.STEEL TCEI M6X12 SCREW	
0H5276A			0H5276A1		
0H5281A			0H5281A0		
0H5282A			0H5282A0		
VE1810A			KVE1810A	SPEED.PRO HV DIODE KIT	Code / Description / Qty / UOM VE1810A0 / 1 / PZ

ASM3244A/0.D01 Electrical system

COMPONENT			SPARE PART		
Code	*Description*	*Image*	*Code*	*Description*	*Components list*
VE1816A			KVE1816A	SPEED.PRO 16AMP EMI FILTER KIT	Code: VE1816A0 — Description: — Qty: 1 — UOM: PZ
VI0502A			VI0502A1		
CN1015A			KCN1015A	HV 2500V 0.85UF MW CONDENSER KI	Code: CN1015A0 — Description: — Qty: 1 — UOM: PZ
VE1805A	TRANSFORMER HV 230/2295/3.15V 1000VA		KVE1805A	SPEED.PRO 1000VA HV TRANSFORMER KIT	Code: VE1805A0 — Description: TRANSFORMER HV 230/2295/3.15V 1000VA — Qty: 1 — UOM: PZ