PRODOTTI / RICAMBI
PRODUCTS / SPARE PARTS
PRODUITS / PIECES DETACHEES
PRODUKTE / ERSATZTEILE
PRODUCTOS / REPUESTOS

APPIA II

# Esplosi: mod. “2GR compact”

22/04/2014

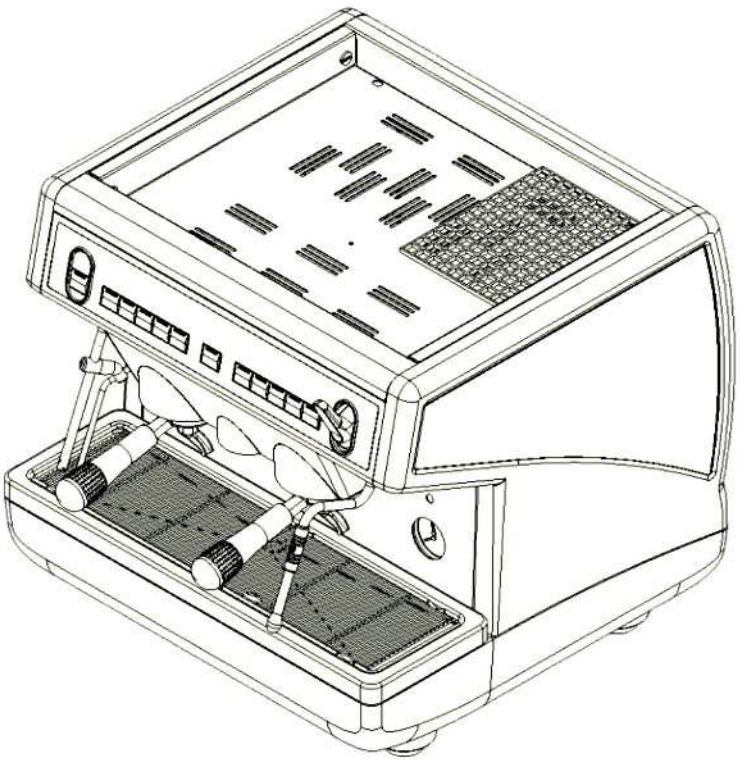

nuova SIMONELLI®

# INDICE


» TAV 01 - **COMPONENTI GRUPPO CARENA**
CABINET PARTS

» TAV 02 - **COMPONENTI GRUPPO INVOLUCRO COMANDI**
CONTROL PANEL PARTS

» TAV 03 - **COMPONENTI GRUPPO EROGAZIONE**
POURING UNIT GROUP PARTS

» TAV 04 - **COMPONENTI IDRAULICI**
HYDRAULIC PARTS

» TAV 05 - **COMPONENTI RUBINETTI VAPORE E ACQUA CALDA**
STEAM & HOT WATER VALVES PARTS

» TAV 06 – **COMPONENTI AUTOSTEAM**
AUTOSTEAM PARTS

» TAV 07 - **COMPONENTI GRUPPO IDRAULICO**
HYDRAULIC GROUP PARTS

» TAV 08 - **COMPONENTI CALDAIA**
BOILER PARTS

» TAV 09 - **COMPONENTI TELAIO**
FRAME PARTS

» TAV 10 - **COMPONENTI ELETTRICI ED ELETTRONICI**
ELECTRONIC & ELECTRIC PARTS


## » LEGENDA :

I CODICI SCRITTI IN GRASSETTO SI RIFERISCONO AI COMPONENTI IMPIEGATI ATTUALMENTE.

I CODICI IMPIEGATI PRIMA SONO SCRITTI IN CORSIVO CON INDICATA A FIANCO LA DATA DI FINE VALIDITA'.

ESEMPIO:

*07300127 (ϕ2.5) - 16/05/2007*
**07300226 (ϕ2)**

nuova SIMONELLI®

# COMPONENTI GRUPPO CARENA
## CABINET PARTS

APPIAII COMPACT

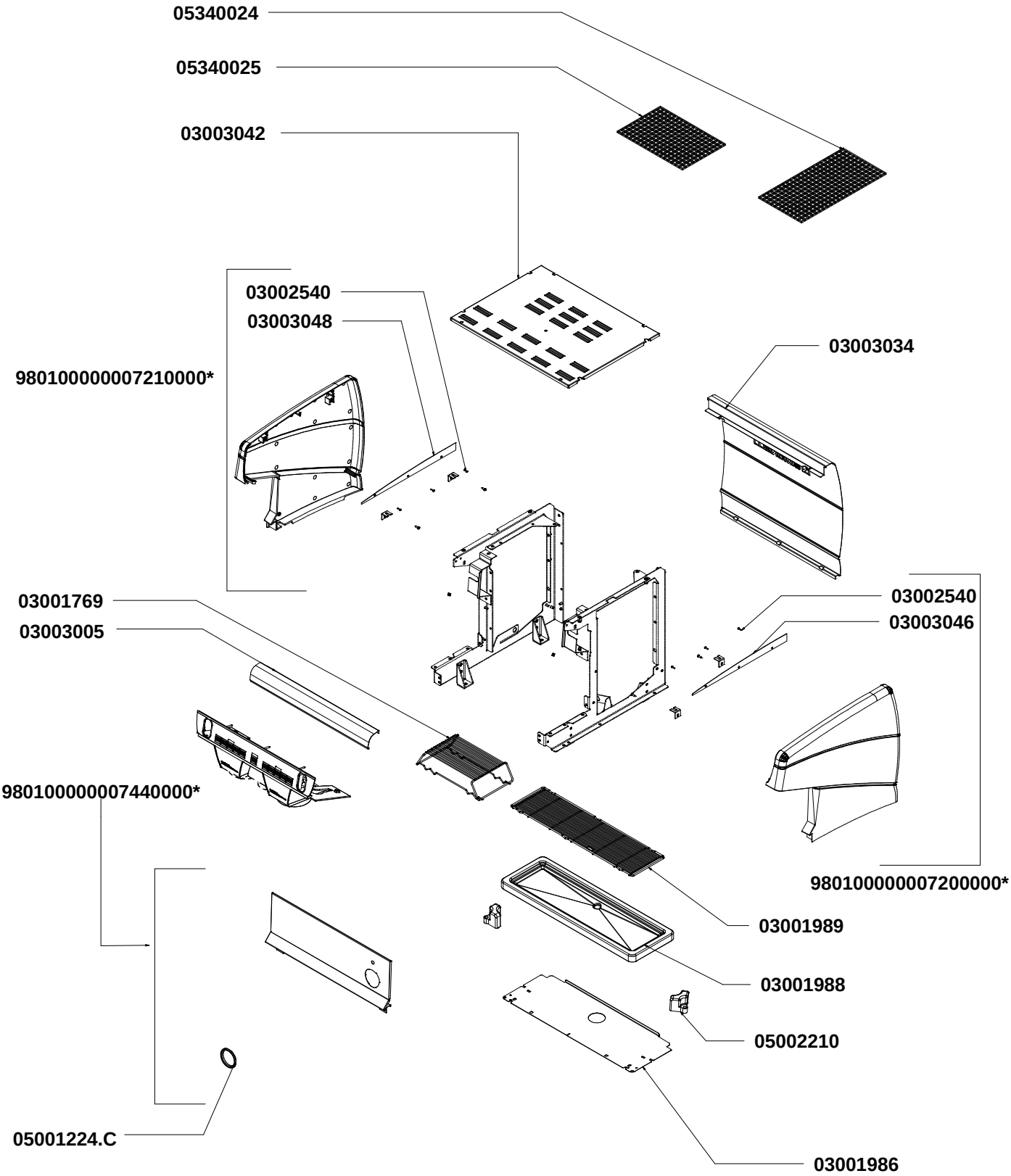


*** SPECIFY VERSION**
**SPECIFICARE VERSIONE**

nuova SIMONELLI

TAV 01

# COMPONENTI GRUPPO INVOLUCRO COMANDI
## CONTROL PANEL PARTS



**VOL**

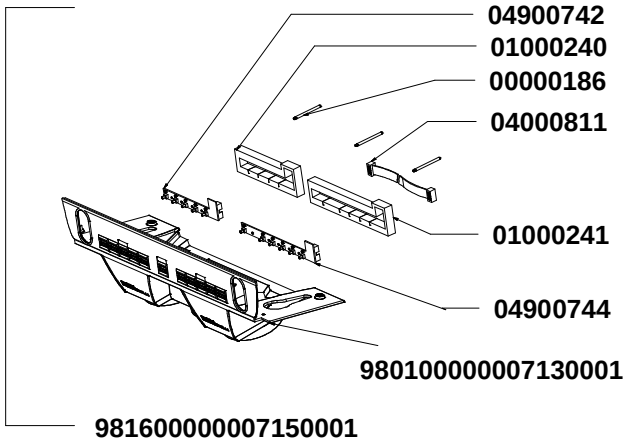


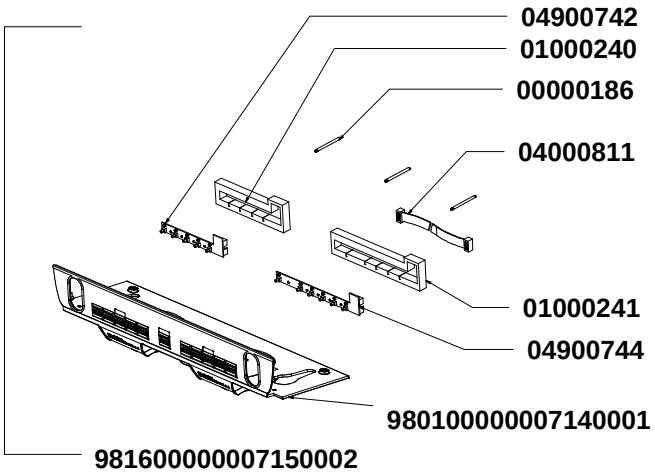


**VOL + AUTOSTEAM**

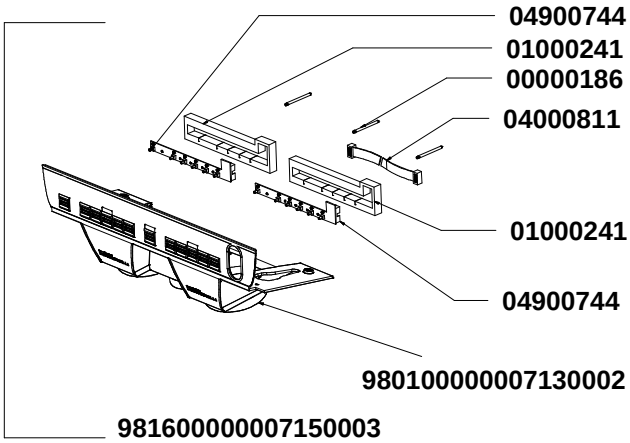


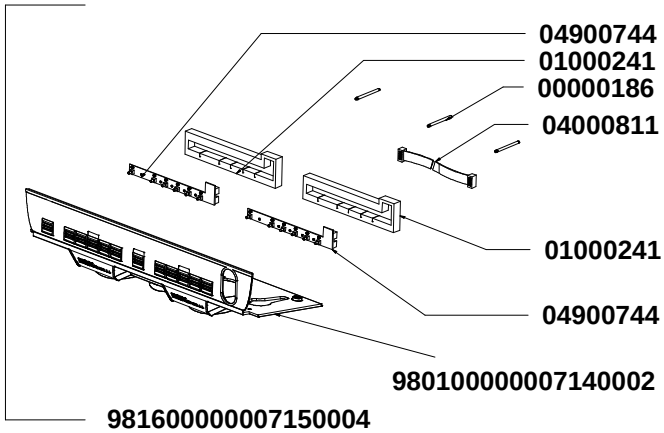


**SEM**

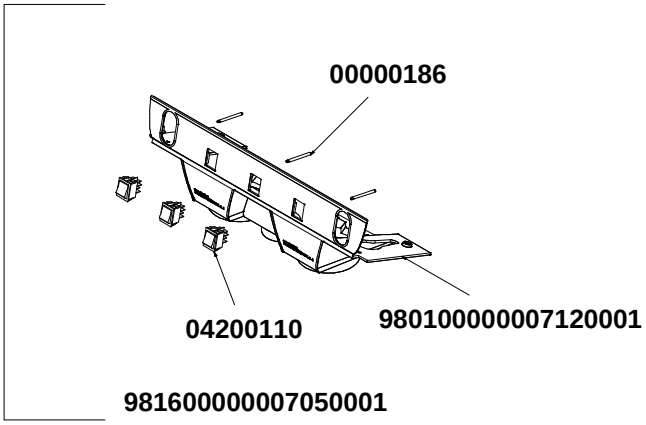


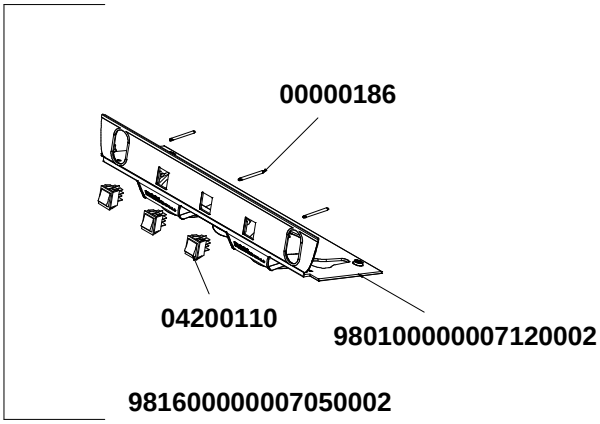


nuova SIMONELLI

# COMPONENTI GRUPPO EROGAZIONE
## POURING UNIT GROUP PARTS

APPIAII COMPACT

**GRUPPO EROGAZIONE SX**

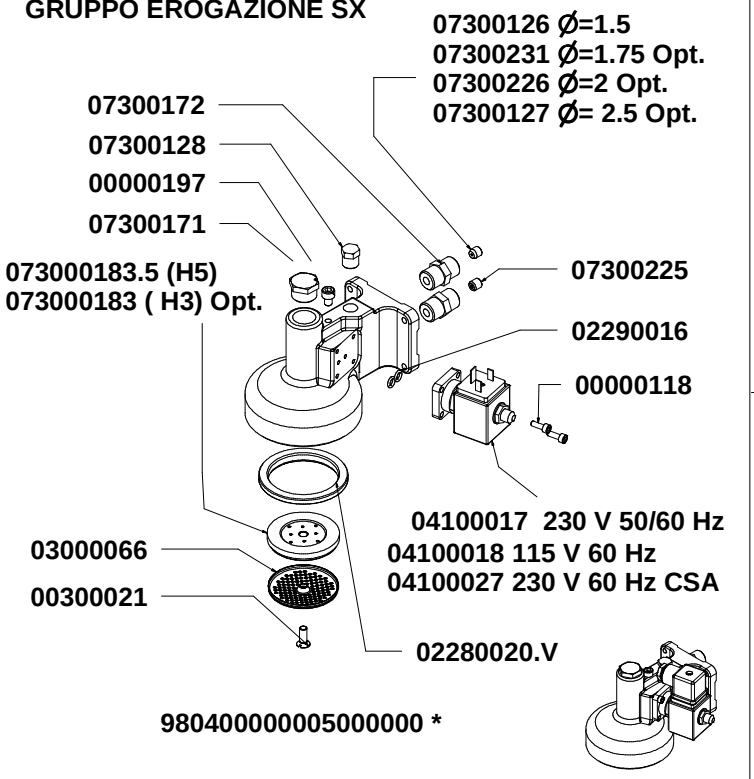


**GRUPPI ALTI HIGH GROUPS**

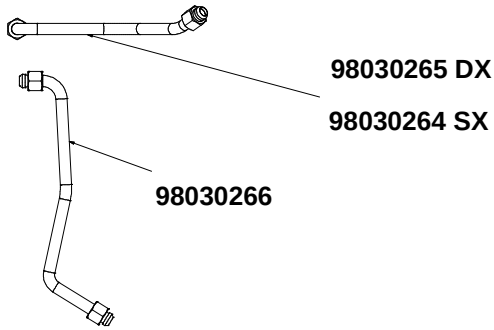


**GRUPPI BASSI LOW GROUPS**

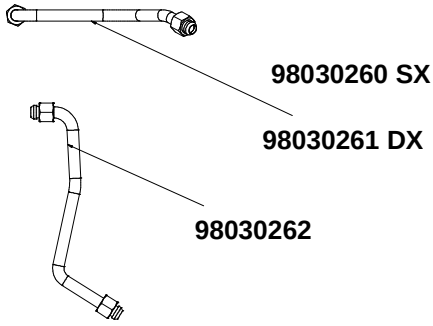


**GRUPPO EROGAZIONE DX**

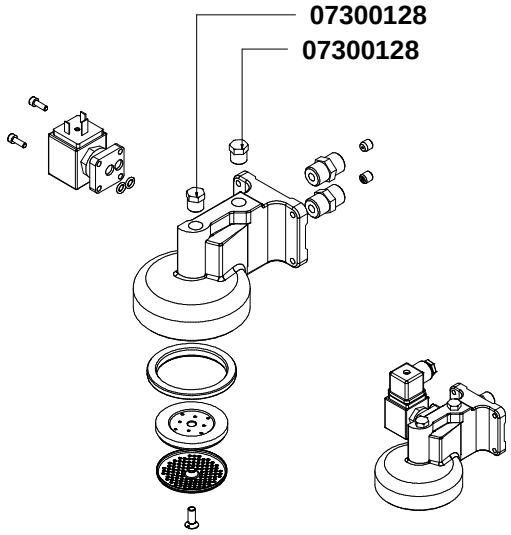


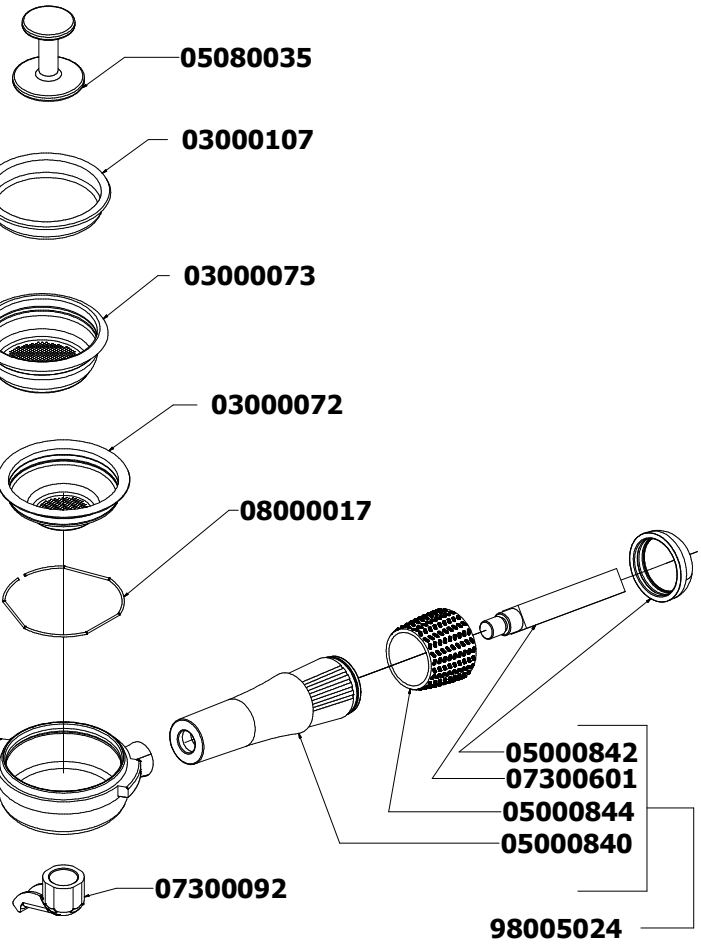


**98005022**

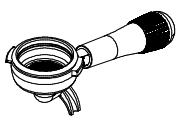

**98005021**

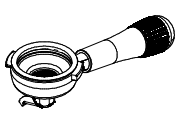

*** SPECIFY VERSION**
**SPECIFICARE VERSIONE**

nuova SIMONELLI

TAV 03

# COMPONENTI IDRAULICI
## HYDRAULIC PARTS



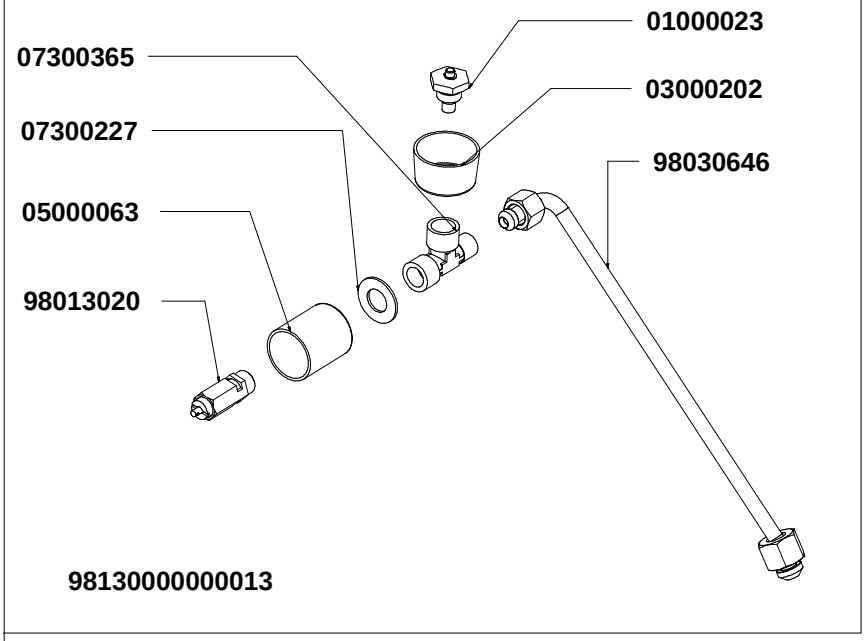


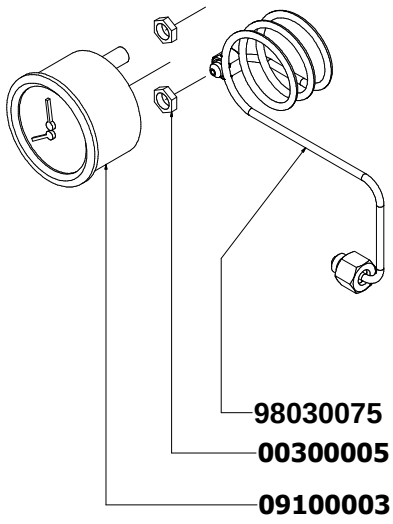


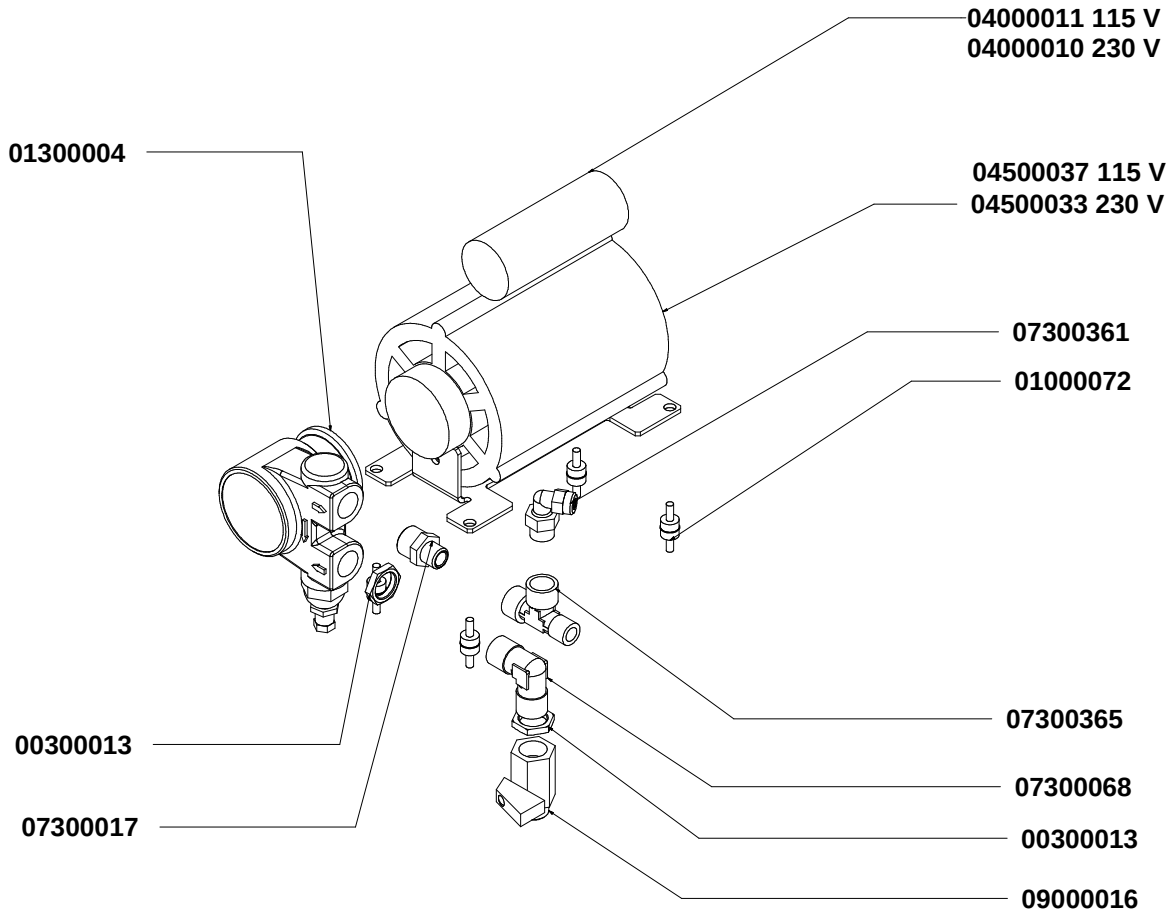


| Componenti idraulici | | |
|---|---|---|
| Codice | Descrizione | Description |
| 01000113 | Tubo ingresso L=1500 | Filling tube |
| 01000087 | Tubo scarico | Draining tube |
| 00000133 | Fascetta | Stanless still girdle |

nuova SIMONELLI

# COMPONENTI RUBINETTI VAPORE E ACQUA CALDA
## STEAM & HOT WATER VALVES PARTS

APPIAII COMPACT

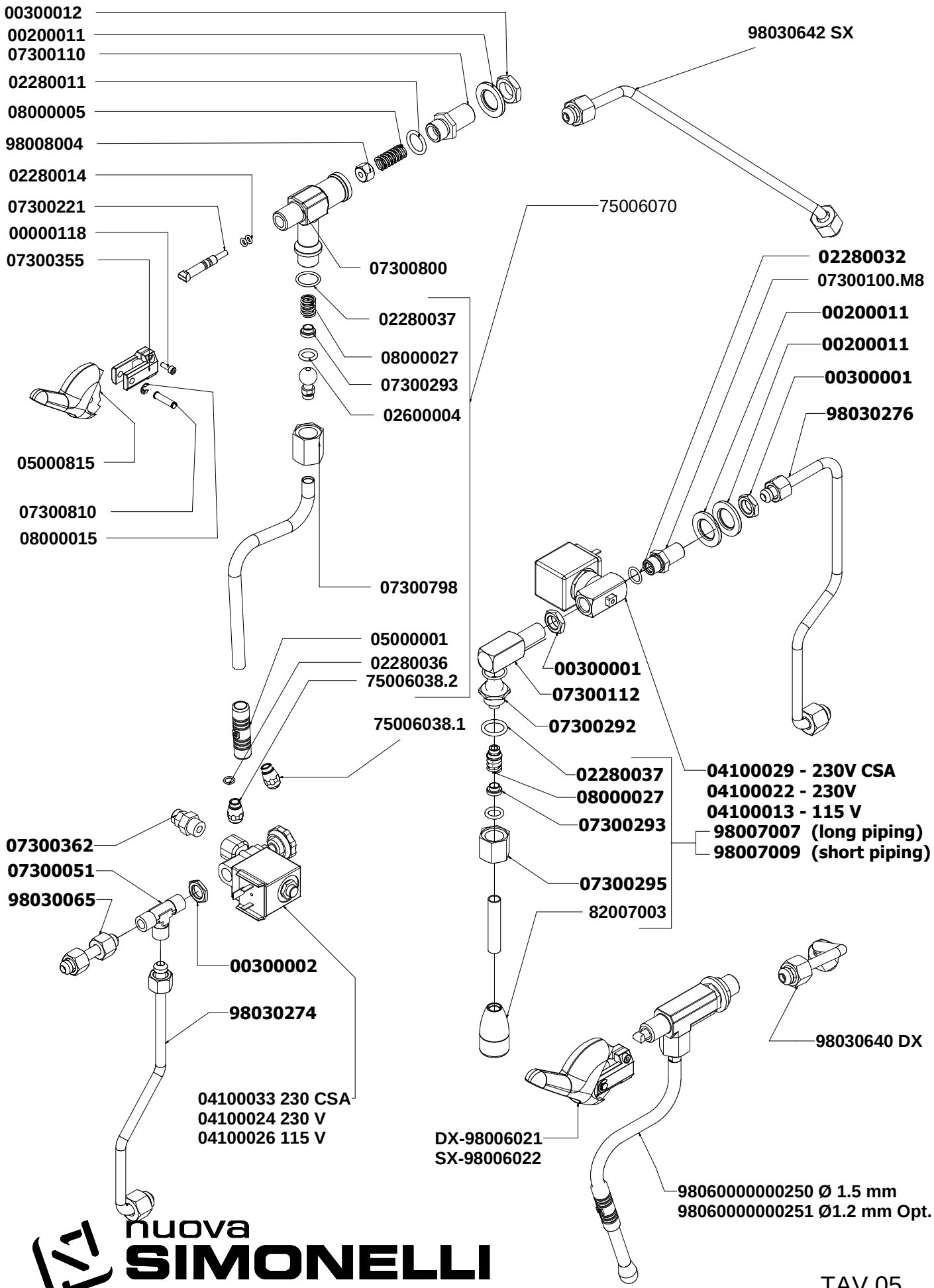


nuova SIMONELLI

TAV 05

# COMPONENTI AUTOSTEAM
AUTOSTEAM PARTS



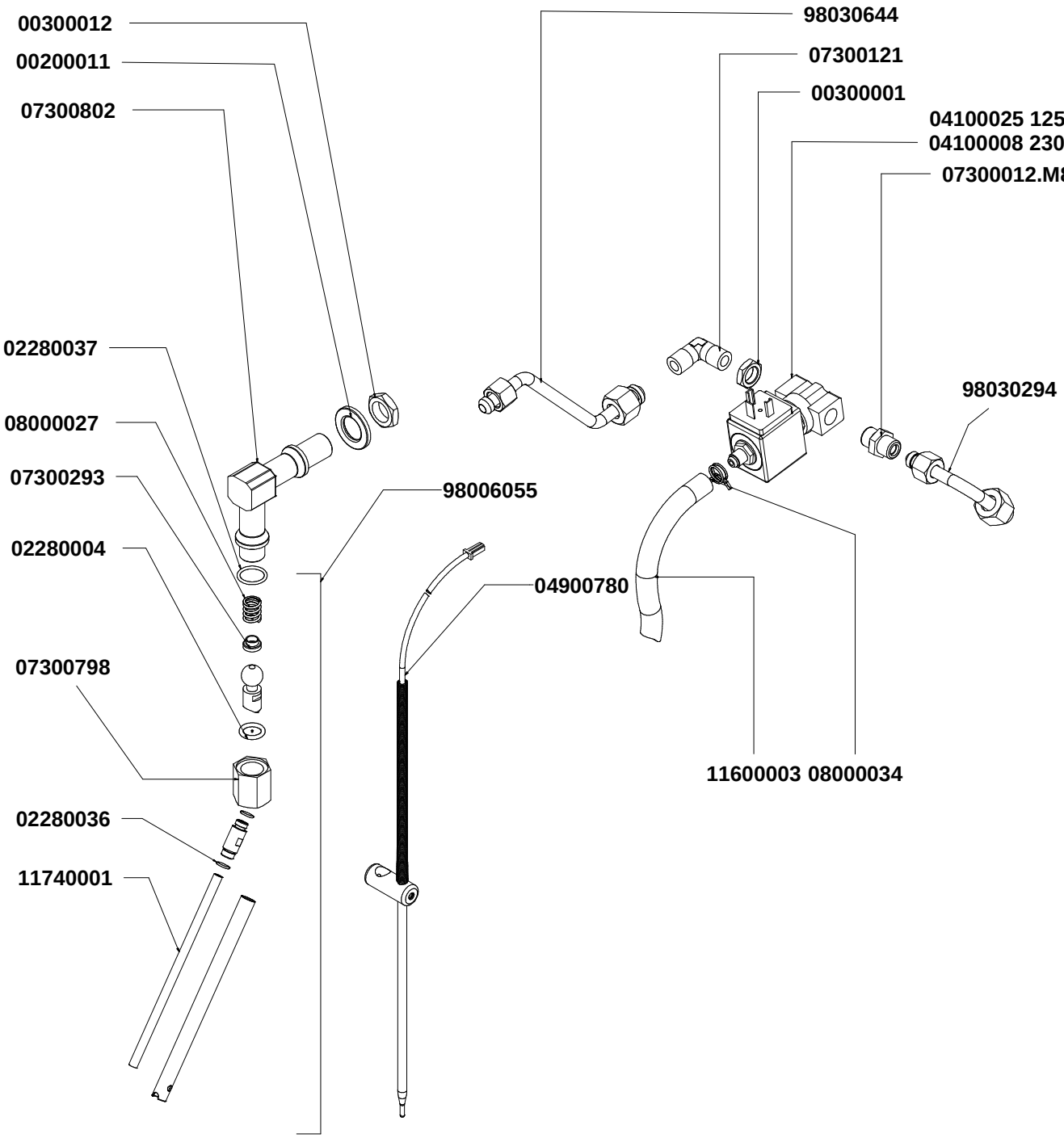


nuova SIMONELLI

# COMPONENTI GRUPPO IDRAULICO
## HYDRAULIC GROUP PARTS



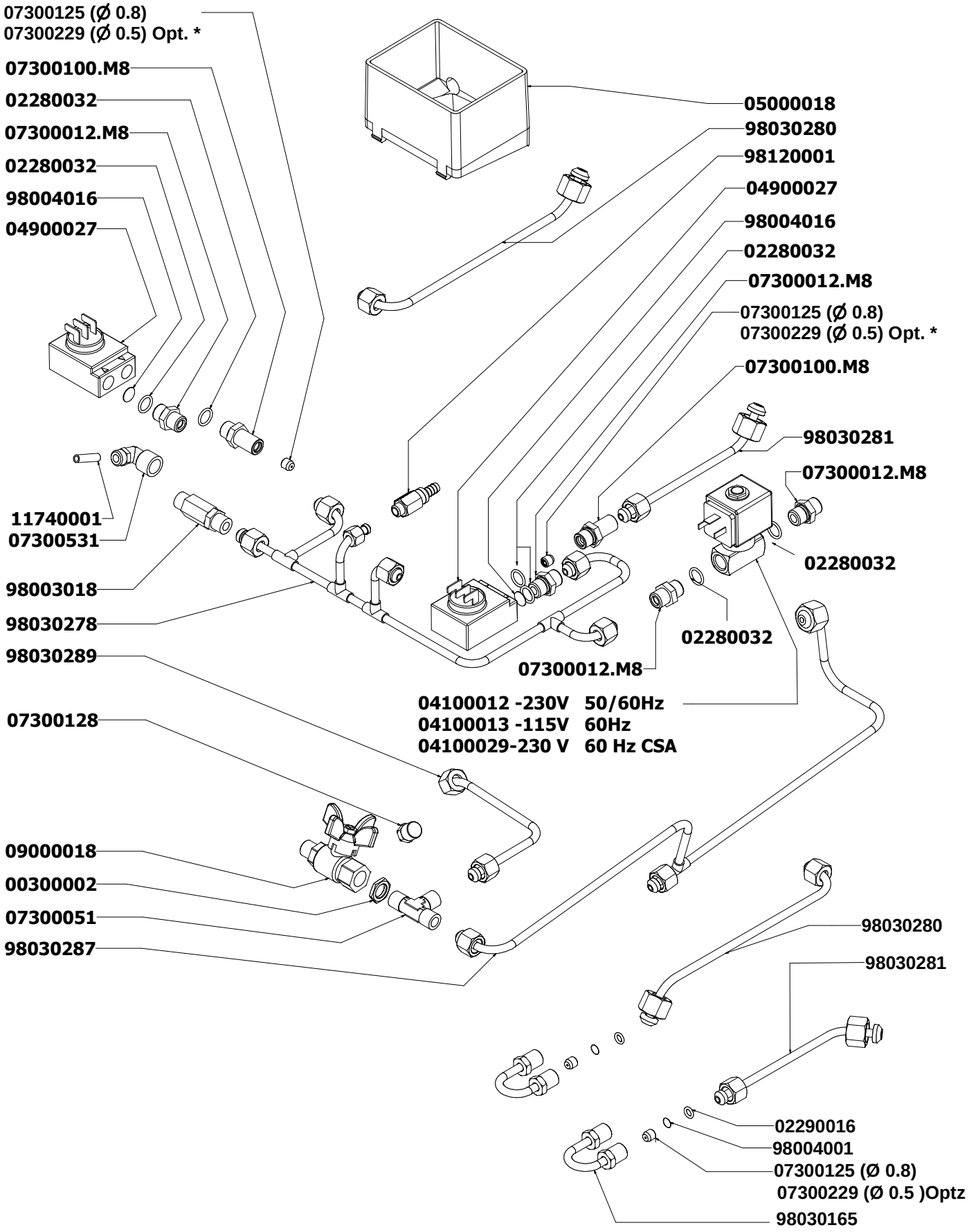


nuova SIMONELLI

*** SPECIFY VERSION**
**SPECIFICARE VERSIONE**

TAV 07

# COMPONENTI GRUPPO CALDAIA
## BOILER PARTS



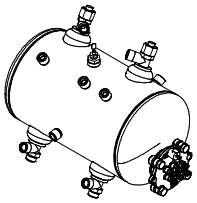

9803000000070400000*




*SPECIFY VERSION
SPECIFICARE VERSIONE

nuova SIMONELLI

TAV 08

# COMPONENTI TELAIO
## FRAME PARTS

APPIAII COMPACT

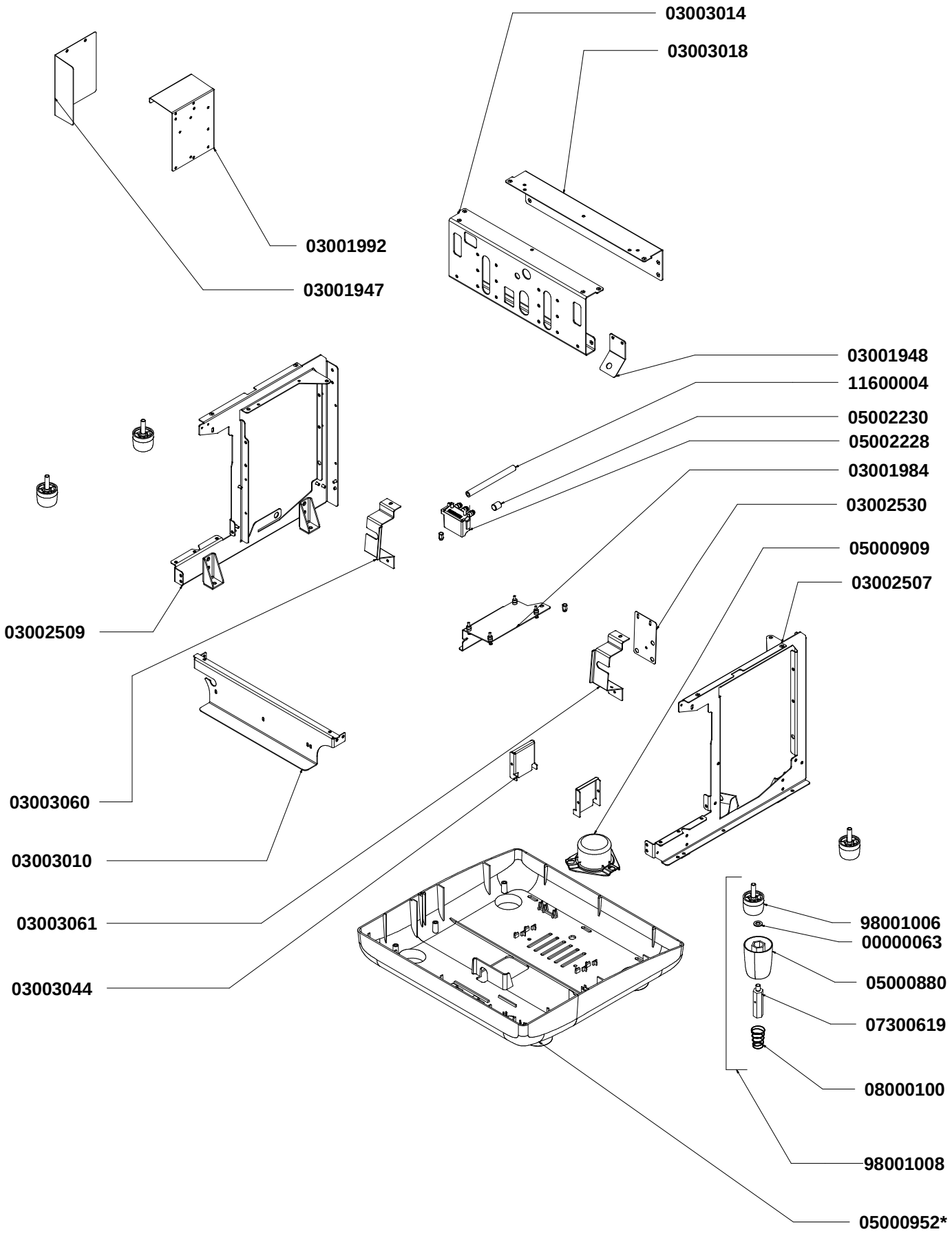


*SPECIFY VERSION
SPECIFICARE VERSIONE

nuova SIMONELLI

TAV 09

# COMPONENTI ELETTRICI ED ELETTRONICI
## ELECTRONIC & ELECTRIC PARTS



**VOLUMETRICA**

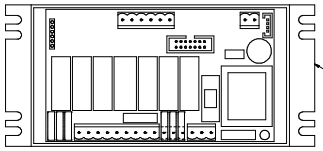

**04900740 (230 V)**
**04900741 (115 V)**

**04900744**

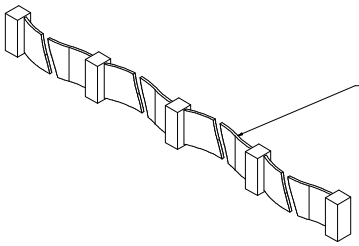

**04000811**

**04900742**

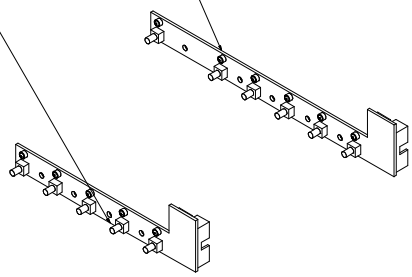



**SEMIAUTOMATICA**

**09000004.UL (115 V)**
**09000015 (230 V)**
**09000015.UL (230 V) CSA**

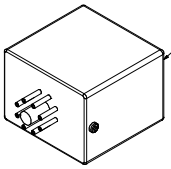

**04200110**

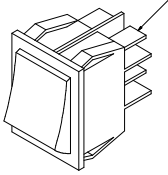

**04000049**

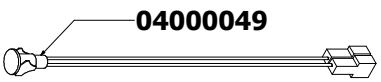

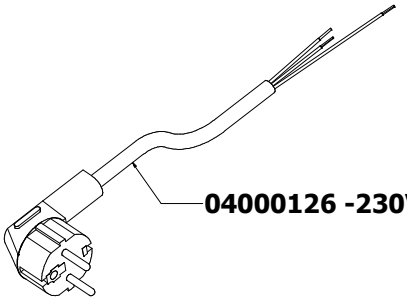

**04000126 -230V**

**04200057**



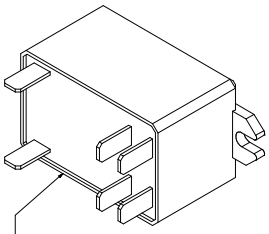

**04200007 -230V**
**04200009 -115V**

**05000083**

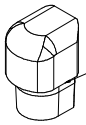

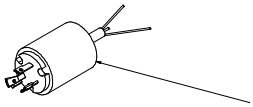

**04060015 CSA 115 V**
**04000023 CSA 230 V**

| Componeneti elettrici | |
|---|---|
| COD | Descrizione |
| 04000368 | Supplemento 1 GR Aurelia |
| 04000819 | Cablaggio volumetrica |
| 04000818 | Cablaggio semiautomatica |

nuova SIMONELLI

| CODICE | DESCRIZIONE | DESCRIPTION | END VALIDITY |
|---|---|---|---|
| 00000048 | VITE AUTOF 2,9x4,5 TC/T.CR. *KB* | SELF-THREADING SCREW 2.9x4.5 TC/T.CR. | |
| 00000063 | RONDELLA AQ D 10x21x2 ZN *KB* | WASHER AQ D 10X21X2 ZN | |
| 00000094 | VITE INOX M8x20 TE 5739 *KB* | STAINLESS STEEL HEX CAP SCREW M8x20 | |
| 00000118 | VITE INOX M4x12 TCEI 5931 *KB* | SS HEX SOCKET CAP SCREW M4x12 | |
| 00000133 | FASCETTA INOX WD12 16-25 C7 W2 *KB* | STAINLESS STEEL GIRDLE WD12 16-25 C7 W2 | |
| 00000186 | PRIGIONIERO M4x55 1xTC | CLOSURE STUD M4X55 | |
| 00000197 | VITE INOX M6x8 TCEI ISO 4762 *KB* | STAINLESS HEX SOCKET CAP SCREW M6x8 | |
| 00000213 | VITE AUTOF 4,2x16 TC T.CR. ZIN *KB* | SCREW AUTO 4,2x16 TC T.CR. ZIN | |
| 00200011 | RONDELLA AQ M16 17X30X3 ZINC *KB* | GALVANISED WASHER M16 17x30x3 | |
| 00300001 | DADO OT 1/4 GAS SPESS.5 CH18 *AGG. 22.07.96 | BRASS NUT 1/4 GAS SPESSOR 5 | |
| 00300002 | DADO OT 1/4 SPESS.3 CH18 AGG. 22.07.96 | BRASS NUT 1/4 SPESSOR 3 | |
| 00300005 | DADO OT 1/8 GAS AGG.22.07.96 SPESS.4 CH13 | BRASS NUT 1/8 GAS SPESSOR 4 | |
| 00300012 | DADO OT 3/8 GAS CH22 SPESS.6 AGG. 22.07.96 | BRASS NUT 3/8 GAS SPESSOR 6 HEX 22 | |
| 00300013 | DADO OT 3/8 GAS SPESS.4 CH20 AGG.22.07.96 | BRASS NUT 3/8 GAS SPESSOR 4 | |
| 00300021 | VITE INOX M6x18 TSP TC DIN963 *KB* | SS SLOTTED COUNTERSUNK SCREW M6X18 DIN963 | |
| 01000023 | VALVOLINA SFIATO | ANTI VACUUM VALVE | |
| 01000072 | ANTIVIBRANTE AD 10x10 M4 MM | ANTI-VIBRATING AD 10X10 M4 MM | |
| 01000087 | TUBO SCARICO 18x24,4 | DRAINING TUBE 18x24,4 | |
| 01000113 | TUBO FLESS INOX 3/8 A 90ø F. - 3/8 F. L=1500 | SS FLEXIBLE TUBE 3/8 90° BENDED 3/8 F-F L1500 | |
| 01000240 | PROTEZ. SCHEDA EROG. GRUPPO 1 APPIA COMPACT V | EROGATION BOARD PROTECTION GROUP 1 APPIA COMPACT V | |
| 01000241 | PROTEZ. SCHEDA EROG. GRUPPO 2+ ACQUA APPIA COMPACT V | EROGATION BOARD PROTECTION GROUP 2 + WATER APPIA COMP/ | |
| 01300004 | POMPANTE VOLUMETRICO 50 lt/h OT-57 | VOLUMETRIC PUMP 50 lt/h | |
| 02060015 | GUARNIZIONE PTFE 067x054x2 | GASKET FOR HEATING ELEMENT 067x054x2 | |
| 02280004 | GUARN. OR 115 D.17 EP856 SNODO LANCIA | GASKET OR 115 D17 EP | |
| 02280011 | GUARN. OR R11 D19 EP 851 *KB* | GASKET O RING R11 D19 EP 851 | |
| 02280014 | GUARN. OR D7 AN2/OR102 SILICON 7XL1715 *KB* | GASKET O RING D.7 AN2/OR102 SILICON | |
| 02280020.V | GUARNIZ. SOTTOCOPPA CONICA h8,2 V - NBR 82/84 ShA | GROUP GASKET CONICAL | |
| 02280032 | GUARN. OR 114 D.15 EP 851 *KB* | GASKET O RING 114 D.15 EP 851 | |
| 02280036 | GUARN. OR x BECCO LANCIA VAP. DI 6x1.2 | GASKET OR x STEAM WA | |
| 02280037 | GUARN. OR CHIUSURA SNODO 16x2 | GASKET OR JOINT LOCK | |
| 02290016 | GUARN. OR D 9,5 R5 SILICONE R. *KB* | GASKET OR D 9,5 R5 SILICON RED | |
| 02600004 | GUARN. OR 15,2x10,2x2,5 TEFLONx SFERA LANCIA VAPORE | GASKET OR - 15.2 x 9 | |
| 02600004 | GUARN. OR 15,2x10,2x2,5 TEFLONx SFERA LANCIA VAPORE | O- RING 15,2x10,2x2,5 TEFLONx STEAM WAND SPHERE | |
| 03000066 | DOCCIA INOX 56x5,5x 6 SALDATA Aisi304 | SHOWER INOX 056X05,5 | |
| 03000072 | FILTRO 1 CAFFE' ALTO 7 gr. | FILTER ONE COFFEE HIGH REPLACE 03000321 | |
| 03000073 | FILTRO 2 CAFFE' ALTO 14 gr. | FILTER TWO COFFEE HIGH REPLACE 03000322 | |
| 03000107 | FILTRO CIECO | BLIND FILTER | |
| 03000202 | VASCHETTA RACC.CONDENSA MASTER AGG. 07.06.97 | CONDENSATION TRAY MASTER | |
| 03001769 | SUPP. TAZZINE INOX | AURELIA RAISED CUP STAND | |
| 03001947 | LAMIERA CHIUSURA SUPPORTO CENTRALINA APPIA | SWITCHBOARD LOCK SUPPORT PLATE APPIA | |
| 03001948 | LAMIERA SUPP. PRESSOSTATO 1 GR APPIA | PRESSOSTAT SUPP. PLATE 1 GR APPIA | |
| 03001984 | SUPPORTO POMPA APPIA COMPACT | PUMP SUPPORT APPIA COMPACT | |
| 03001986 | CHIUSURA SICUREZZA 2 GRUPPI APPIA COMPACT | SAFETY LOCK 2 GROUPS APPIA COMPACT | |
| 03001988 | PIATTO RACCOGLIACQUA APPIA COMPACT | DRIP TRAY APPIA COMPACT | |
| 03001989 | RETINA PIANO LAVORO 2 GR.APPIA COMPACT | WORKTOP NET 2 GR.APPIA COMPACT | |
| 03001992 | SUPPORTO CENTRALINA APPIA C. | SWITCHBOARD SUPPORT APPIA C. | |
| 03002507 | FIANCO DX STAMPATO TELAIO AURELIA II / APPIA II | RIGHT SIDE PRINTED FRAME AURELIA II/APPIA II | |
| 03002509 | FIANCO SX STAMPATO TELAIO AURELIA II / APPIA II | LEFT SIDE PRINTED FRAME AURELIA II/APPIA II | |
| 03002530 | STAFFA SUP. MANOM. AURELIA II | GAUGE SUPPORT AURELIA II | |
| 03002540 | LAMIERA L FISSAGGIO FIANCO AURELIA II | L SIDE FRAME FITTING PLATE AURELIAII | |
| 03003005 | INVOLUCRO COMANDI 2GR APPIA II COMPACT | COMMANDS COVER 2 GR. APPIA II COMPACT | |
| 03003010 | LAMIERA SUPP.INVOLUCRO COMANDI 2GR. APPIA II COMPACT | COMMAND COVER SUPPORT PLATE 2 GR. APPIA II COMPACT | |
| 03003014 | PARETE PORTAGRUPPI APPIA II COMPACT | GROUP HOLDER PANEL APPIA II COMPACT | |
| 03003018 | LAMIERA L SUP. POSTERIORE 2GR. APPIA II COMPACT | L SHAPED SUPPORT 2GR. APPIA II COMPACT | |
| 03003020 | SUPP. RUB. VAPORE SX APPIA II | LEFT STEAM WAND SUPPORT APPIA II | |
| 03003021 | SUPP. RUB. VAPORE DX APPIA II | RIGHT STEAM WAND SUPPORT APPIA II | |
| 03003034 | CARENA RETRO APPIA II COMPACT | REAR COVER APPIA II COMPACT | |
| 03003042 | PIATTO PORTATAZZE 2GR APPIA II COMPACT | CUP WARMER PLATE 2 GR. APPIA COMPACT | |
| 03003044 | LAMIERA SUPPORTO CALDAIA APPIA 2GR/APPIA II 2GR-COMPACT | BOILER SUPPORT APPIA 2GR/APPIA II 2 GR. COMPACT | |
| 03003046 | MOSTRINA SUP. FIANCO DX APPIA II | TOP RIGHT STEEL PLATE APPIA II | |
| 03003048 | MOSTRINA SUP. FIANCO SX APPIA II | TOP LEFT STEEL PLATE APPIA II | |
| 04000010 | CONDENS. 6microF x 04500033 UL | CAPACITOR 6 MICRO F | |
| 04000011 | CONDENS.25 microF UL 04500036 04500037 | CAPACITOR 25 microF UL 04500036 04500037 | |
| 04000023 | CAVO ALIMENTAZ. UL AWG3x16 SJO SPINA USA DIRITTA 15A GUAINA | SUPPLY CABLE UL AWG3X16 USA PLUG SHEATH 90°C | |
| 04000049 | LAMPADA SPIA D10 230V UL + FASTON M 6,3 | LAMP D10 230V UL | |
| 04000126 | CAVO ELETTR. 2mt CE SPINA SCHUKO 90° 3x1,5 H05VV-F | ELECTRIC CABLE 2MT CE SCHUKO PLUG 90° 3X1,5 | |
| 04000368 | SUPPLEMENTO 4ø GRUPPO AURELIA | SUPPLEMENTARY WIRING SYSTEM AURELIA 4° GROUP | |
| 04000811 | CAVO 14 VIE COLL.PULSANTIERA 2 GR APPIA COMPACT | CABLE 14 WAYS TOUCH PAD APPIA COMPACT | |
| 04000818 | CABLAGGIO 2GR SEM APPIA II COMPACT | WIRING APPIA II COMPACT 2 GR. SEM | |
| 04000819 | CABLAGGIO 2GR VOL APPIA II COMPACT | WIRING APPIA II COMPACT 2 GR. VOL | |
| 04060015 | CAVO ALIM. AWG3x14 SJOOW 90°C UL/CSA 2mt SPINA USA DRITTA 20A 2 | POWER CABLE AWG3x14 + PLUG 20A | |
| 04100005 | E.V. NC 2VIE 1/4-1/4 220-230V 50/60Hz EPDM F2 CE PIEDINO FIL. 1xM | NC 2-WAY SOLENOID 1/4-1/4 | |
| 04100008 | E.V. NC 3VIE 1/4-1/4 SCAR. 1/8 220V 50Hz-240V 60Hz RUBY F3 UL PIEDINO F | NC 3-WAY SOLENOID 1/4-1/4 1/8 OUTLET | |
| 04100012 | E.V. NC 2VIE 1/4-1/4 220-230V 50/60HZ VITON F1.5 CE PIEDINO FIL. 1xM | EV 2W 1/4 1/4 220-230V 50/60HZ VITON F1,5 CE | |
| 04100013 | E.V. NC 2VIE 1/4-1/4 110-120V 60Hz VITON F1.5 UL PIEDINO FIL. 1xM4 | ELECTROVALVE 2 WAYS 110V | |
| 04100017 | E.V. NC 3VIE BASETTA SCAR. 1/8 220-230V 50/60Hz RUBY F1.5 CE | EV 3W DOWNL.1/8 220-230V 50/60HZ RUBY F1,5 CE | |
| 04100018 | E.V. NC 3VIE BASETTA SCAR. 1/8 110-120V 60Hz RUBY F1.6 UL | ELECTROVALVE 3 WAYS 110 UL | |
| 04100022 | E.V. NC 2VIE 1/4-1/4 220-230V 50/60Hz RUBINO F3 CE PIEDINO FIL. 1x | 2 WAYS SOLENOID 1/4 F.3 220/230V 50/60Hz | |
| 04100024 | E.V. NC 2VIE 1/4 REGOLAT. 90° 230V 50/60Hz F.3 + MANOP. EPDM CE | 2 WAYS EV WITH REGULATOR | |
| 04100025 | E.V. NC 3VIE 1/4-1/4 SCAR. 1/8 110-120V 50/60Hz RUBY F3 UL PIEDINO FIL. | E.V. 3WAYS 1/4-1/4 1/8 110-120V 50/60HZ F3 UL | |
| 04100026 | E.V. NC 2VIE 1/4 REGOLAT. 90° 115V 60Hz EPDM F3 UL | E.V. NC 2WAYS 1/4 REG. 90° 115V 60HZ F3 UL | |
| 04100027 | E.V. NC 3VIE BASETTA SCAR. 1/8 208-240V 60Hz RUBY F1.3 UL | EV 3W DRAIN 1/8 208-240V 60Hz RUBY D1,3 UL | |
| 04100029 | E.V. NC 2VIE 1/4-1/4 208-240V 60Hz VITON F1.5 UL PIEDINO FIL. 1xM4 | E.V. 2VIE AL 220/240 50/60 UL | |
| 04100033 | E.V. NC 2VIE 1/4 REGOLAT. 90° 220V 60Hz F3 UL CANOT. Aisi316 | EV 2 WAYS 1/4 REGULATING 90° 220V 60Hz D3 UL | |
| 04200007 | RELE' DI POTENZA 30A 230V BIPOLARE | POWER RELAY 30A 230 V BIPOLAR | |
| 04200009 | RELE' DI POTENZA 30A 115 V BIPOLARE | POWER RELAY 30A 115 V BIPOLAR | |
| 04200011 | INTERRUTTORE BIPOLARE LUMINOSO ROSSO RETTANGOLARE UL 16A | BIPOLAR SWITCHING LIGHTED RED 0/1 RECTANGULAR UL 16A | |
| 04200057 | INTERRUT. ACCENSIONE BIPOL. GRANDE 10A UL 22x19 "AURELIA" | ON/OFF SWITCH 10A UL 22x19 | |
| 04200110 | INTERRUTTORE BIPOLARE LUMINOSO BIANCO RETTANGOLARE UL 16A | WHITE LIGHTED BIPOLAR SWITCH UL 16A WITHOUT PRINTED IMAGES | |
| 04500033 | MOTORE EL. MASTER/PREMIER 2001 230V 50/60Hz 120W | PUMP MOTOR 230V 50/60Hz | |
| 04500037 | MOTORE ELETTRICO 115V 50/60Hz APPIA 1GR. 100W | ELECTRIC MOTOR 115V | |
| 04900027 | DOSATORE VOLUMETRICO OTT. 1/4-1/4GAS -ATT. TEST. 2,8x0,5 FORO P | FLOWMETER | |
| 04900740 | CENTRALINA ELETTR. 2 GR. APPIA COMPACT 230V | CONTROL BOARD APPIA COMPACT 230 V 2 GR. | |
| 04900741 | CENTRALINA ELETTR. 2 GR. APPIA COMPACT 115V | ELECTR. SWITCHBOARD 2 GR. APPIA COMPACT 115V | |
| 04900742 | SCHEDA EROG. GRUPPO 1 APPIA COMPACT | BREWING GROUP 1 CARD | |

APPIA II COMPACT

| CODICE | DESCRIZIONE | DESCRIPTION | END VALIDITY |
|---|---|---|---|
| 04900744 | SCHEDA EROG. GRUPPO 2 +ACQUA CALDA APPIA COMPACT | BREWING GROUP 2 CARD + HOT WATER APPIA COMP. | |
| 04900780 | SONDA PT1000 x LANCIA VAPORE "TURBO CREAM" D06 + SUPPORTO AD | PROBE PT1000 X STEAM WAND "TURBO CREAM" D06 | |
| 05000001 | GOMMINO PROTEZIONE LANCIA D.10 | STEAM ARM RUBBER GRI | |
| 05000018 | VASCHETTA SCARICO AURELIA | DRAIN BOX | |
| 05000063 | COPRI VALVOLA SICUREZZA PA6 | SAFETY VALVE COVER | |
| 05000815 | MANOPOLA VAPORE ABS "AURELIA" 2011 | STEAM LEVER HANDLE | |
| 05000840 | MANOPOLA PORTAFILTRO 2003 NERO | FILTER HOLDER KNOB 2003 BLACK | |
| 05000842 | CHIUSURA MANOPOLA PORTAFILTRO 2003 | FILTER HOLDER KNOB LOCK 2003 | |
| 05000844 | RIVESTIMENTO GOMMA NERA MANOPOLA PORTAFILTRO | BLACK RUBBER COVER FILTER HOLDER KNOB | |
| 05000880 | PROLUNGA PIEDE ALTO 2005 D.66 H=80 mm. | TALL FOOT EXTENSION D.66 H=80 MM. | |
| 05000909 | COPRI INTERRUTTORE CILINDRICO | ABS SWITCH PROTECTION 2GR. APPIA | |
| 05000952 | BASAMENTO 2 GR. APPIA COMPACT NERO | BASE 2 GR. APPIA COMPACT | |
| 05000952.BPV | BASAMENTO 2 GR. APPIA COMPACT BIANCO PERLA VERNICIATO | BASEMENT 2 GR. APPIA COMPACT PEARL WHITE VARNISHED | |
| 05000952.RV | BASAMENTO 2 GR. APPIA COMPACT ROSSO VERNICIATO | BASEMENT 2 GR. APPIA COMPACT RED VARNISHED | |
| 05001224.C | MOSTRINA MANOMETRO AURELIA II CROMATA | WATER MANOMETER CHROMED FRAME AURELIA II | |
| 05002210 | SUPPORTO ANGOLARE PIATTO RACCOGLIACQUA | FLAT ANGULAR WATER TRAY SUPPORT ADONIS | |
| 05002228 | COLLETTORE SCARICO GRUPPI EROG | POURING UNIT DRAIN MANIFOLD | |
| 05002230 | TAPPO GOMMA SCARICO x 05002228 | DRAIN RUBBER PLUG | |
| 05080035 | PRESSA CAFFE' ABS NERO | PLASTIC COFFEE PRESS | |
| 05340024 | GRIGLIA NYLON 178x350 | NYLON GRILL 178X350 | |
| 05340025 | GRIGLIA NYLON 178x270 | NYLON GRILL 178X270 | |
| 06200008 | BECCO DUE VIE OPEN | TWO WAYS SPOUT | |
| 07300012.M8 | RACC. 1/4 1/4 GAS CON OR F.M8 OT-57 USA | CONNECTION 1/4 1/4 W/OR HOLE M8 | |
| 07300017 | RACCORDO 1/4 3/8 GAS OT-57 USA | FITTING 1/4 3/8 GAS OT. | |
| 07300051 | RACCORDO T 1/4 M-M-M CILIN. | CONNECTION T 1/4 M-M-M CYLIN 464 | |
| 07300067 | DADO RACCORDO 3/8 GAS D11 AGG. 15.11.84 | NUT CONNECTION 3/8 GAS D11 | |
| 07300068 | RACCORDO L 3/8 M-M CILIN. OT-58 NICHELATO | CONNECTION L 3/8 M-M CYLIN 459 | |
| 07300092 | BECCO UNA VIA CURVO OPEN | SINGLE SPOUT | |
| 07300097 | TERMINALE CHIUSO D 14 | TERMINAL D.14 | |
| 07300100.M8 | ATTACCO SCAR. 1/4-1/4 + INT M8 | DOWNLOAD FASTENING 1/4 DOWNLOAD TRAY WITH OR | |
| 07300110 | TAPPO PORTA MOLLA R.V. PR. | SPRING HOLDER TAP | |
| 07300112 | ATTACCO RUB. ACQUA OT-57 USA | FASTENING WATER PROGRAM TAP | |
| 07300121 | RACCORDO L 1/4 M-M CILIN 459 AGG. 18.02.97 | CONNECTION L 1/4 M-M CYLIN. 459 | |
| 07300125 | GIGLER M8x8 F.0,8 | GIGLEUR M8X8 F.0.8 | |
| 07300126 | GIGLER M8x8 F.1,5 | GIGLEUR M8X8 F.1,5 | |
| 07300127 | GIGLER M8x8 F.2,5 | GIGLEUR M8X8 F.2,5 | |
| 07300128 | TAPPO 1/4 GAS AGG.31.01.89 | CAP 1/4 GAS | |
| 07300171 | TAPPO OT M20X1,5 GR. EROG. | TAPPO OT M20X1,5 GR. EROG. CAP | |
| 07300172 | RACCORDO 3/8"M-3/8"M INT M8 OT-57 USA | PIPE FITTING 3/8"M-3/8"M INT M8 | |
| 07300183 | PADIGLIONE GRUPPO | GROUP HEAD CAP | |
| 07300183.5 | PADIGLIONE GRUPPO PREMIER2002 h=5 AGG. 30.08.2012 | DIFFUSER h=5 | |
| 07300221 | ASTA INOX RUBINETTO VAPORE | STEAM VALVE INOX SCREW | |
| 07300225 | GIGLER M8x8 F.3 | GIGLEUR M8X8 F.3 | |
| 07300226 | GIGLER M8x8 F.2 | GIGLEUR M8X8 F.2 | |
| 07300227 | RONDELLA OT D.26x13,5x1,5 AGG.5.06.03 | BRASS WASHER D.26X13,5X1,5 | |
| 07300229 | GIGLER M8x8 F.0,5 | GIGLEUR M8X8 F.0,5 | |
| 07300231 | GIGLER M8x8 F.1,75 | GIGLEUR M8X8 F.1,75 | |
| 07300292 | ATTACCO RUBINETTO PER LANCIA VAPORE SNODATA INOX | TAP FASTENING FOR FLEX. STAINLESS STEAM WAND | |
| 07300293 | BUSSOLA SNODO OTTONE | BRASS BUSHING | |
| 07300295 | DADO RACC. 3/8 LANCIA SNODATA OTTONE NICHELATO | WAND NUT 3/8 | |
| 07300355 | FORCELLA RUBINETTO '99 OTTONE OT-58 | TAP FORK | |
| 07300361 | RACCORDO L GIR 1/4 M-CALZAM.6 VITON 346 A NICHELATO | PIVOTING CONNECTION L 6 1/4 VITON346A | |
| 07300362 | RACCORDO DIR. 1/4 M-CALZ.6 340 | STRAIGHT FITTING 1/4 | |
| 07300365 | RACCORDO T 1/4 M-F-F | T FITTING 1/4 FFM | |
| 07300531 | RACCORDO L 1/4 F CALZAM. 347 | CONNECTION L 1/4 F ACTUATOR 347 | |
| 07300601 | INSERTO MANOPOLA PORTAFILTRO 2003 INOX (Aisi303) | FILTER HOLDER KNOB INSERTION 2003 STAINLESS | |
| 07300619 | INSERTO PROLUNGA PIEDE ALTO ES 20 L=70 + M10 | INSERTION EXTENSION TALL FOOT ES 20 L=70 M10 | |
| 07300798 | DADO RACC. 3/8 H=26 LANCIA SNODATA OTTONE NICHELATO | NUT BEND WAND | |
| 07300800 | CORPO RUB.VAPORE AURELIA II OT-58 | STEAM TAP | |
| 07300802 | ATTACCO RUB. ACQUA/AUTOSTEAM AURELIA II OT-58 | FASTENING WATER/AUTOSTEAM WAND AURELIA II | |
| 07300810 | SPINOTTO RUB.VAPORE AURELIA II | SPINOTTO RUB.VAPORE AURELIA IIREPLACE 07300104 | |
| 08000005 | MOLLA 6 ST 11,5X8,5X25 RUB.VAPORE | STEAM VALVE SPRING | |
| 08000015 | ANELLO SEEGER TIPO RS 5 INOX UNI7434 *KB* | SEEGER RING RS 5 STAINLESS STEEL | |
| 08000017 | MOLLA BLOCCA FILTRO ACC.INOX | FILTER HOLDER SPRING INOX | |
| 08000027 | MOLLA PER LANCIA SNODATA | WAND SPRING | |
| 08000034 | FASCETTA STRINGITUBO D12 *KB* | HOSE CLAMPS D12 | |
| 08000100 | MOLLA INTERNA PIEDE 2005 | SPRING | |
| 09000004.UL | CENTRALINA AUTOLIVELLO UL 115V | SWITCHBOARD SELF-LEVEL UL 115V | |
| 09000005 | SONDA AUTOLIVELLO COMP. L=130 | WATER LEVEL SENSOR | |
| 09000015 | CENTRALINA AUTOLIVELLO 230V | AUTO WATER FILL CIRCUI 230V | |
| 09000015.UL | CENTRALINA AUTOLIVELLO UL 230V | AUTOLEVEL CONTROL BOARD UL 230V | |
| 09000016 | RUBINET. SFERA ALLACCIO RETE 3/8 M-F | TAP CONNECTION SUPPLY 3/8 M-F | |
| 09000018 | RUBINET. SFERA DISTRIBUTORE 1/4 M-F | DISPENSER TAP 1/4 M-F | |
| 09100003 | MANOMETRO DOPPIA SCALA 2,5:15 D.60 | DOUBLE SCALE GAUGE | |
| 09200006 | PRESSOSTATO MACCHINA CE/UL | PRESSOSTAT | |
| 09500004 | TERMOSTATO R.MAN. 135°C | AUTOMATIC THERMOSTAT 135°C | |
| 11600003 | TUBO SILICONE 8x12 70Sh PEROX (1mt=75gr) TRASPARENTE | SILICON TUBE 8X12 70SH PEROX TRANSPARENT | |
| 11600004 | TUBO SILICONE 5x9 60Sh PEROX BIANCO SEMITRASPARENTE (1mt=5 | SILICON PIPE WHITE 5x9 60Sh SEMI-TRANSPARENT | |
| 11740001 | TUBO TEFLON 6/4 | TEFLON PIPE 4X6 | |
| 14100090 | RESISTENZA 2600W 230V APPIA II COMPACT | HEATING ELEMENT 2600W 230 V APPIA II COMPACT | |
| 14100091 | RESISTENZA 1500W 115V APPIA II COMPACT | HEATING ELEMENT 1500W 115 V APPIA II COMPACT | |
| 75006038.1 | BECCO VAPORE M8,65x0,75 F. 1,2 ESAG.12 | STEAM TIP | |
| 75006038.2 | BECCO VAPORE M8,65x0,75 F. 1,5 ESAG.12 | STEAM NOOZLE M8,65x0 | |
| 75006070 | KIT LANCIA VAPORE SNODATA INOX CON BECCO 1,5 E DADO ALTO INC | STEAM WAND TIP 1,2 NUT H=26 | |
| 82007003 | ROMPIGETTO ACQUA CALDA D.23,5 F1/8" | HOT WATER DISPERSION | |
| 98001006 | PIEDE MACCHINA 06 BICOMPONENTE D.48 H=40 INSERTO M10 MASCHIO | MACHINE FEET replace 98001001 | |
| 98001008 | KIT PIEDI ALTI 2006 (4 pz.) | KIT TALL FEET 2006 (4 PCS.) | |
| 98003018 | VALVOLA RITEGNO 98 ES.16 | VALVOLA RITEGNO 98 ES.16 RETAIN VALVE | |
| 98004001 | FILTRO INOX DIAM. 8 | FILTER INOX DIAM. 8 | |
| 98004016 | FILTRO INOX DIAM. 12 | STAINLESS FILTER DIAM. 12 | |
| 98005021 | PORTAFILTRO INCLINATO COMP. 1 VIA N.S. | COMPLETE ERGONOMIC FILTERHOLDE1 SPOUT | |
| 98005022 | PORTAFILTRO INCLINATO COMP. 2 VIE N.S. | COMPLETE FILTERHOLDER 2 WAYS ERGONOMIC | |
| 98005024 | CORPO PORTAFILTRO INCLINATO + MANOPOLA N.S. | TILTED FILTERHOLDER +HANDLE | |
| 98006021 | ASSIEME MANOPOLA VAPORE "2004" DX | COMBINED STEAM KNOB "2004" RIGHT | |
| 98006022 | ASSIEME MANOPOLA VAPORE "2004" SX | COMBINED STEAM KNOB "2004" LEFT | |

**APPIA II COMPACT**

| CODICE | DESCRIZIONE | DESCRIPTION | END VALIDITY |
|---|---|---|---|
| 98006055 | KIT LANCIA VAPORE TURBOCREAM DADO ALTO APPIA II | KIT TURBOCREAM STEAM WAND HIGH NUT APPIA II | |
| 98007007 | KIT LANCIA ACQUA C. INOX L=100 COMPL. DI ROMPIGETTO 82007003 AUR | KIT HOT WATER SS WAND L=100 WITHOUT SPRAYEND | |
| 98007009 | KIT LANCIA ACQUA C. INOX L=70 COMP. DI ROMPIGETTO 82007003 | KIT HOT WATER STAINLESS WAND L=70 W/SPRAYEND | |
| 98008004 | PISTONCINO CHIUSURA COMPLETO | COMPLETE STEAM VALVE PISTON | |
| 980100000007120001 | ASS. PULSANT. APPIA II COMPACT PELLICOLA S + SUPP. GR.BASSI | ASS. BUTTON PANEL APPIA II COMPACT S + SUPPORT LOW GROUP | |
| 980100000007120002 | ASS. PULSANT. APPIA II COMPACT PELLICOLA S + SUPP. GR.ALTI | ASS. BUTTON PANEL APPIA II COMPACT S + SUPPORT HIGH GROUP | |
| 980100000007130001 | ASS. PULSANT. APPIA II COMPACT PELLICOLA V + SUPP. GR.BASSI | ASS. BUTTON PANEL APPIA II COMPACT V + SUPPORT LOW GROUP | |
| 980100000007130002 | ASS. PULSANT. APPIA II COMPACT PELLIC.V+SUPP. GR.BASSI AUTOSTEAM | ASS. BUTTON PANEL APPIA II COMPACT V + SUPPORT LOW GROUP A | |
| 980100000007140001 | ASS. PULSANT. APPIA II COMPACT PELLICOLA V + SUPP. GR.ALTI | ASS. BUTTON PANEL APPIA II COMPACT V + SUPPORT HIGH GROUP | |
| 980100000007140002 | ASS. PULSANT. APPIA II COMPACT PELLIC. V+SUPP. GR.ALTI AUTOSTEAM | ASS. BUTTON PANEL APPIA II COMPACT V + SUPPORT HIGH GROUP A | |
| 980100000007200001 | ASSIEME FIANCO DX APPIA II 2 GR. NERO | RIGHT SIDE PANEL ASSEMBLY APPIA II 2 GR. BLACK | |
| 980100000007200003 | ASSIEME FIANCO DX APPIA II BIANCO PERLA | RIGHT SIDE PANEL ASSEMBLY APPIA II WHITE PAINTED | |
| 980100000007200004 | ASSIEME FIANCO DX APPIA II ROSSO | RIGHT SIDE PANEL ASSEMBLY APPIA II RED | |
| 980100000007210001 | ASSIEME FIANCO SX APPIA II 2 GR. NERO | LEFT SIDE PANEL ASSEMBLY APPIA II 2 GR. BLACK | |
| 980100000007210003 | ASSIEME FIANCO SX APPIA II BIANCO PERLA | LEFT SIDE PANEL ASSEMBLY APPIA II WHITE PAINTED | |
| 980100000007210004 | ASSIEME FIANCO SX APPIA II ROSSO | LEFT SIDE PANEL ASSEMBLY APPIA II RED | |
| 980100000007440001 | ASSIEME PARETE FRONT. APPIA II COMPACT GR.BASSI | ASSEMBLY FRONT PANEL LOW GROUPS APPIA II COMPACT | |
| 980100000007440002 | ASSIEME PARETE FRONT. APPIA II COMPACT GR.ALTI | ASSEMBLY FRONT PANEL HIGH GROUPS APPIA II COMPACT | |
| 98013020 | VALVOLA SICUREZZA A5 1/4 TARATA 1,8 BAR | SAFETY VALVE 1/4 1.8 BAR | |
| 980300000007040001 | ASSIEME CALDAIA COMP. APPIA II COMPACT 230V | BOILER ASSEMBLY COMP. APPIA II COMPACT 230V | |
| 980300000007040002 | ASSIEME CALDAIA COMP. APPIA II COMPACT 110V | BOILER ASSEMBLY COMP. APPIA II COMPACT 110V | |
| 98030065 | TUBO D.8 1/4 1/4 L=59.5 | TUBE D.8 1/4 1/4 L=50 | |
| 98030075 | TUBO CAPILLARE 1/8-1/4 0,9x2x400 MANOMETRO- POMPA | CAPILLARY TUBE 1/8-1/4 0,9X2X400 MANOM.-PUMP | |
| 98030165 | TUBO 1/4 1/4 MODIFICA SEMIAUT APPIA 1-2-3 GR. | TUBE 1/4 1/4 SEM CHANGE APPIA 1-2-3 GR | |
| 98030260 | TUBO SUP.SX 3/8 3/8 GR.BASSO APPIA COMPACT | LEFT UPPER TUBE 3/8 3/8 LOW GR. APPIA COMP. | |
| 98030261 | TUBO SUP.DX 3/8 3/8 GR.BASSO APPIA COMPACT | UPPER RIGHT TUBE 3/8 3/8 LOW GR. APPIA COMP | |
| 98030262 | TUBO INF. 3/8 3/8 GR.BASSO APPIA COMPACT | LOWER TUBE 3/8 3/8 LOW GR. APPIA COMPACT | |
| 98030264 | TUBO SUP.SX 3/8 3/8 GR.ALTO APPIA COMPACT | UPPER RIGHT TUBE 3/8 3/8 HIGH GR. APPIA COMP | |
| 98030265 | TUBO SUP.DX 3/8 3/8 GR.ALTO APPIA COMPACT | UPPER TUBE 3/8-3/8 LOW GR. APPIA 1 GR. | |
| 98030266 | TUBO INF. 3/8 3/8 GR.ALTO APPIA COMPACT | LOWER TUBE 3/8 3/8 HIGH GR. APPIA COMPACT | |
| 98030272 | CROCIERA PRESSOSTATO-MANOMETRO APPIA COMPACT | CROSSPIECE PRESSOSTAT-MANOMETER APPIA | |
| 98030274 | TUBO 3/8-1/4 CALDAIA-T MISCELA TORE A. CALDA APPIA COMPACT | TUBE 3/8-1/4 BOILER-T H.W. MIXER EV APPIA C | |
| 98030276 | TUBO 3/8 1/4 CALDAIA-ATTACCO A CALDA APPIA COMPACT | TUBE 3/8 1/4 BOILER-HOT WATER APPIA COMPACT | |
| 98030278 | CROCIERA INGRESSO-NEPLAS-RUB. BYPASS-EV LIVELLO-DOSATORI A | CROSSPIECE ENTRANCE-NEPL-TAP BYPASS-DOSER | |
| 98030280 | TUBO COLL. GR.IDRAUL.- SCAMB. SX APPIA COMPACT | TUBE 1/4 3/8 DOSER- LEFT EXCHANGER APPIA COMP | |
| 98030281 | TUBO COLL. GR.IDRAUL.- SCAMB. DX APPIA COMPACT | TUBE 1/4 3/8 DOSER-RIGHT EXCHANGER APPIA COMP | |
| 98030287 | TUBO 1/4 3//8 EV.LIVELLO- RUB. BY PASS- CALDAIA APPIA COMPACT | TUBE 1/4 3//8 EV. LEVEL- TAP BYPASS- BOILER | |
| 98030289 | TUBO 1/4 1/8 SCARICO APPIA COMPACT | TUBE 1/4 1/8 DOWNLOAD APPIA COMPACT | |
| 98030292 | TUBO TEFLON INT. SCAMBIATORE D.6 x 160 mm. | INT. TEFLON TUBE EXCHANGER D.6 X 160 MM. | |
| 98030294 | TUBO 3/8-1/4 CALDAIA-EV 3 VIE APPIA COMPACT AUTOSTEAM | TUBE 3/8-1/4 BOILER-3W. EV APPIA COMPACT | |
| 98030630 | CALDAIA SALDATA APPIA COMPACT II | WELDED BOILER APPIA COMACT II | |
| 98030640 | TUBO LANCIA VAP. DX APPIA II COMPACT | STEAM WAND PIPE RIGHT APPIA II COMPACT | |
| 98030642 | TUBO LANCIA VAP. SX APPIA II COMPACT | STEAM WAND PIPE LEFT APPIA II COMPACT | |
| 98030644 | TUBO E.V. AUTOSTEAM - LANCIA APPIA II COMPACT | TUBE SV AUTOSTEAM-STEAM WAND APPIA II COMPACT | |
| 98030646 | TUBO VALVOLA SICUREZ. APPIA II COMPACT | TUBE SECURITY VALVE APPIAP II COMPACT | |
| 980400000005000001 | ASSIEME GRUPPO EROG.APPIA II CE 220-230V 50Hz | GROUP ASSEMBLY APPIA II CE 220-230V 50Hz | |
| 980400000005000006 | ASSIEME GRUPPO EROG.APPIA II ETL/CSA 208-240V 60Hz | GROUP ASSEMBLY APPIA II ETL/CSA 208-240V 60Hz | |
| 980400000005000010 | ASSIEME GRUPPO EROG.APPIA II CSA 110-120V 60Hz | GROUP ASSEMBLY APPIA II CSA 110-120V 60Hz | |
| 980400000005020001 | ASSIEME GRUPPO EROG. DX APPIA II COMPACT CE 220-230V 50Hz | GROUP ASSEMBLY APPIA II CE 220-230V 50Hz | |
| 980400000005020004 | ASSIEME GRUPPO EROG. DX APPIA II COMPACT ETL/CSA 208-240V 60Hz | GROUP ASSEMBLY APPIA II ETL/CSA 208-240V 60Hz | |
| 980400000005020005 | ASSIEME GRUPPO EROG. DX APPIA II COMPACT CSA 110-120V 60Hz | GROUP ASSEMBLY APPIA II CSA 110-120V 60Hz | |
| 98060000000250 | ASS. RUBINETTO VAPORE + LANCIA VAPORE CON DADO ALTO APPIA II | STEAM WAND + STEAM TAP ASSEMBLY | |
| 98060000000251 | ASS. RUBINETTO VAPORE + LANCIA VAPORE CON DADO ALTO APPIA II BE | ASSEMBLY STEAM TAP + STEAM WAND HIGH NUT APPIA II | |
| 98120001 | VALVOLA NEPLAX VITON 16,5 BAR 1/8 - PORTAGOMMA | NEPLAX VITON 16,5 BAR VALVE 1/8 HOSE CLAMP | |
| 98130000000013 | ASSIEME VALVOLA SICUREZZA APPIA II COMPACT | SECURITY VALVE ASSEMBLY APPIA II COMPACT | |
| 981600000007050001 | ASSIEME PULSANTIERA COMP.APPIA II COMPACT SEM GR.BASSI | ASSEMBLY CONTROL PANEL APPIA II COMPACT SEM LOW GROUPS | |
| 981600000007050002 | ASSIEME PULSANTIERA COMP.APPIA II COMPACT SEM GR.ALTI | ASSEMBLY CONTROL PANEL APPIA II COMPACT SEM HIGH GROUPS | |
| 981600000007150001 | ASSIEME PULSANTIERA COMP.APPIA II COMPACT VOL GR.BASSI | ASSEMBLY CONTROL PANEL APPIA II COMPACT VOL LOW GROUPS | |
| 981600000007150002 | ASSIEME PULSANTIERA COMP.APPIA II COMPACT VOL GR.ALTI | ASSEMBLY CONTROL PANEL APPIA II COMPACT VOL HIGH GROUPS | |
| 981600000007150003 | ASSIEME PULSANTIERA COMP.APPIA II COMPACT VOL AUTOSTEAM GR.BA | ASSEMBLY CONTROL PANEL APPIA II COMPACT VOL AUTOSTEAM LOW GR | |
| 981600000007150004 | ASSIEME PULSANTIERA COMP.APPIA II COMPACT VOL AUTOSTEAM GR.AL | ASSEMBLY CONTROL PANEL APPIA II COMPACT VOL AUTOSTEAM HIGH GR | |

**APPIA II COMPACT**