INVENTIVE SIMPLIFICATION

XEVC-0511-EPR

5 GN 1/1



INTEGRATED TECHNOLGY

AIR.Maxi™: The AIR.Maxi™ technology ensures perfect distribution of the air and therefore of the heat within the cooking chamber.
Multiple auto-reversing fans and high speed motors guarantee cooking uniformity in all pans: from those at the bottom of the oven to those at the top. The possibility of choosing from 4 air speeds and 4 semi-static modes allows any type of product to be cooked perfectly, from the most delicate items to products that require high temperatures and a high rate of heat transfer.

STEAM.Maxi:™ Production of dense steam from 35 °C
with extreme accuracy and minimal water consumption.

DRY.Maxi™: The DRY.Maxi™ technology rapidly extracts humidity from the cooking chamber and creates the ideal conditions for food that needs to be cooked in a completely dry environment. Oven baked products are soft, crisp and fragrant, grilled and browned meats retain their weight and flavor, vegetables maintain their perfect consistency. You can cook whatever you like, with Unox, quality comes as standard.

ADAPTIVE.Cooking™: In CHEFTOP MIND.Maps™ PLUS ovens the ADAPTIVE.Cooking™ technology transforms your oven into an intelligent tool. It understands the results that you have in mind, interprets your settings, registers the variations of humidity and temperature, understands the quantity of food that is in the oven and proposes the best way to get exactly the results that you expect. By perfecting the cooking time and regulating the combined actions of 3 technologies, DRY.Maxi™, STEAM.Maxi™ and AIR.Maxi™, ADAPTIVE.Cooking™ always gives you the same perfect result. Exactly as you imagined it.

COOKING ESSENTIALS

FAKIRO™ (Art.: TG875)
Ribbed-flat aluminium plate for pizza and focaccia


No.Fry (Art.: GRP815)
Stainless steel grid for steaming and french fries


Pollo (Art.: GRP825)
Non-stick stainless steel grid to grill 8 chickens


Pollo.Grill (Art.: GRP840)
Stainless steel grid to grill 3 open chickens


Grill (Art.: TG885)
Non-stick aluminium pan for grilling


FAKIRO™Grill (Art.: TG870)
Non-stick ribbed-flat aluminium plate for grilling


Pan.Fry (Art.: TG905)
Enamelled coated pan for frying


Black.20 (Art.: TG895)
Non-stick stainless steel pan

DESCRIPTION

Controllable like your hand. Natural as your thoughts. Fast as your glance. This is Unox CHEFTOP MIND.Maps™, the new line of professional ovens that breaks down the barriers between your idea and the dish you serve. With a gesture. CHEFTOP MIND.Maps™ PLUS stand for complete control of the cooking process and maximum creative freedom. MIND.Maps™. Personality. In a gesture.

• Standard o Optional

MANUAL COOKING MODES	
Convection cooking 30 °C - 260 °C	•
Mixed steam and convection cooking 35 °C - 260 °C, with STEAM.Maxi™ 30% to 90%	•
Mixed humidity and convection cooking 48 °C - 260 °C, with STEAM.Maxi™ 10% to 20%	•
Steaming 48 °C - 130 °C with STEAM.Maxi™ technology 100%	•
Dry air cooking 30°C - 260 °C with DRY.Maxi™ technology 10% to 100%	•
Delta T cooking with core probe	•
MULTI.Point core probe	•
SOUS-VIDE core probe	o
ADVANCED AND AUTOMATIC COOKING PROGRAMMING	
MIND.Maps technology: draw cooking processes made of infinite steps with one simple touch	•
PROGRAMS: store up to 256 user's programs	•
PROGRAMS: possibilty to assign a name and picture to the stored programs	•
PROGRAMS: save recipe name by writing it (in any language)	•
CHEFUNOX: select cooking mode, food to be cooked, food size and cooking result. and start cooking	•
MULTI.Time: technology to manage up to 10 timers to cook different products at the same time	•
MISE.EN.PLACE: technology to sincronize the food loading in the cooking chamber to have every pan ready at the	•
AIR DISTRIBUTION IN THE COOKING CHAMBER	
AIR.Maxi™ technology: multiple, reversing fans	•
AIR.Maxi™ technology: 4 air speeds, programmable	•
AIR.Maxi™ technology: 4 semi static cooking modes, programmable	•
CLIMATE MANAGEMENT IN THE COOKING CHAMBER	
DRY.Maxi™ technology: high performance moisture and humidity extraction, programmable by the user	•
DRY.Maxi™ technology: cooking with humidity extraction 30 - 260 °C	•
STEAM.Maxi™ technology: steaming 48 °C - 130 °C	•
STEAM.Maxi™ technology: combination of moist air and dry air 35 °C- 260 °C	•
ADAPTIVE.Cooking™ technology: identifies cooking process optimization and automatically adjusts cooking parameters to grant perfect cooking results	•
ADAPTIVE.Cooking™ technology: one pan or full load, same result	•
ADAPTIVE.Cooking™ technology: humidity sensor and automatic adjustment	•
DOUBLE STACK COLUMN	
MAXI.LINK technology: allows double-stack oven columns to be created	•
THERMAL INSULATION AND SAFETY	
Protek.SAFE™ technology: maximum thermal efficiency and working safety (cool door glass and external surfaces)	•
Protek.SAFE™ technology: fan impeller break to contain energy loss at door opening	•
Protek.SAFE™ technology: electrical power absorbtion related to the real needs	•
Protek.SAFE™ PLUS: triple glazed door	•
AUTOMATIC CLEANING	
Rotor.KLEAN™: 4 automatic washing programs with detergent and water presence control	•
Rotor.KLEAN™: detergent tank integrated in the oven	•
PATENTED DOOR	
Door hinges made of high durability and self-lubricating techno-polymer	•
Reversible door, even after the installation	o
Door docking positions at 60°-120°-180°	•
AUXILIARY FUNCTIONS	
Preheating temperature up to 260 °C	•
300+: allows to increase the maximum cooking temperature from 260°C to 300 °C	o
Visualisation of the residual cooking time (when cooking not using the core probe)	•
Holding cooking mode «HOLD»	•
Continuous functioning «INF»	•
Visualisation of the set and real values of time, core probe temperature, cavity temperature, humidity, fan speed	•
Temperature unit in °C or °F	•
TECHNICAL DETAILS	
Rounded stainless steel (AISI 304) cavity for hygiene and ease of cleaning	•
Chamber lighting through external LED lights	•
Steam proof sealed MASTER.Touch control panel	•
High-durability carbon fibre door lock	•
Door drip pan with continuous drainage, even when the door is open	•
High capacity appliance drip pan	•
Light weight – heavy duty structure using innovative materials	•
Proximity door contact switch	•
2-stage safety door lock	o
Autodiagnosis system for problems or break down	•
Safety temperature switch	•
Openable internal glass to simplify door cleaning	•
Stainless steel C-shaped rack rails with notched recesses for easy loading	•

CERTIFICATIONS

CE

We reserve the right to make technical improvements.

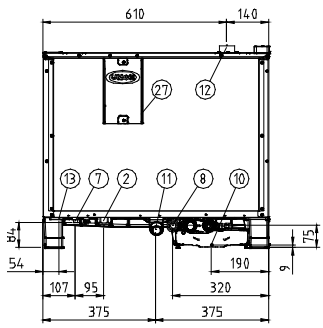

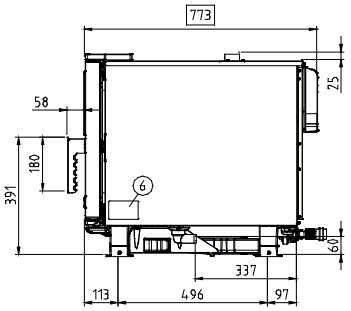

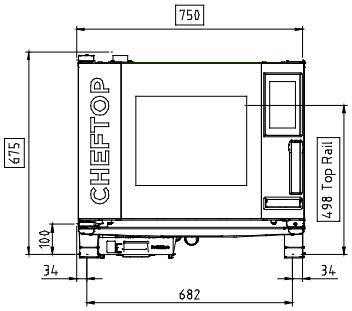

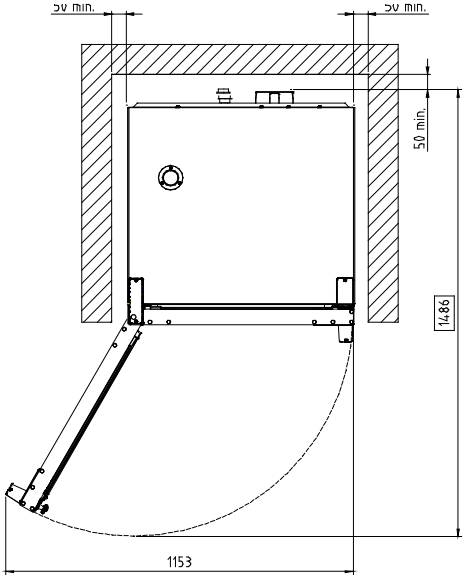

DIMENSIONS

mm

DRAWING LEGEND

2	TERMINAL BOARD POWER SUPPLY
6	TECHNICAL DATA PLATE
7	SAFETY THERMOSTAT
8	3/4" THREAD WATER INLET
10	Det&Rinse
11	CAVITY DRAIN PIPE
12	CHIMNEY
13	ACCESSORIES CONNECTION
27	COOLING AIR OUTLET

XEVC-0511-EPR

CAPACITY, DIMENSIONS, WEIGHT

Capacity	5 GN 1/1
Pan Spacing / Pitch	67 mm
Dimensions WxDxH	750x773x675 mm
Net Weight	70 kg

POWER SUPPLY

VOLTAGE	PHASE	CYCLE	TOTAL POWER	CURRENT	POWER CABLE	CORD
400	3+N	50/60 Hz	9.3 kW	14 A	HO7RN-F 5Gx2,5 mmq	YES

WATER REQUIREMENTS

Water inlet:	one (1) cold water inlets - drinking quality: - one (1) untreated water inlet: 3/4" NPT*, line pressure: 150-600 kPa * Can manifold off of one 3/4" line.
Water drain:	30 mm connection with a 25 mm minimum air gap installed at least 300 mm far away from the oven
Water quality minimum standards:	USING A WATER SUPPLY NOT MEETING UNOX's MINIMUM WATER QUALITY STANDARDS WILL VOID ANY WARRANTY. It is the responsibility of the purchaser to ensure that incoming water supply is compliant with the specifications listed through adequate treatment measures. Contaminant Inlet Water Requirements (untreated water): Free Chlorine: less than 0.1 ppm (mg/L); Chloramine: less than 0.1 ppm (mg/L); Hardness: less than 3 gpg (52 ppm); Chloride: less than 25 ppm (mg/L); ph: 7.0 to 8.5; Alkalinity: less than 50 ppm (mg/L); Silica: less than 12 ppm (mg/L); Total Dissolved Solids (tds): less than 60 ppm

INSTALLATION REQUIREMENTS

Oven must be installed level. Back-flow preventer integrated in the unit.
Installations must comply with all local electrical, plumbing and ventilation codes.

Register to access data and product specifications.
infonet.unox.com

UNOX S.p.A. | Via Majorana 22 - 35010 Cadoneghe PD - Italy - Tel. +39 049 8657511 - Fax. +39 049 8657555 - info@unox.com

We reserve the right to make technical improvements.