LIST OF THE EXPLODED VIEWS



SHELL ASSY

COOLING SYSTEM

EVAPORATOR

HYDRAULIC CIRCUIT

ELECTRIC PARTS

Rev. 15 - 22/01/2014

SHELL ASSY

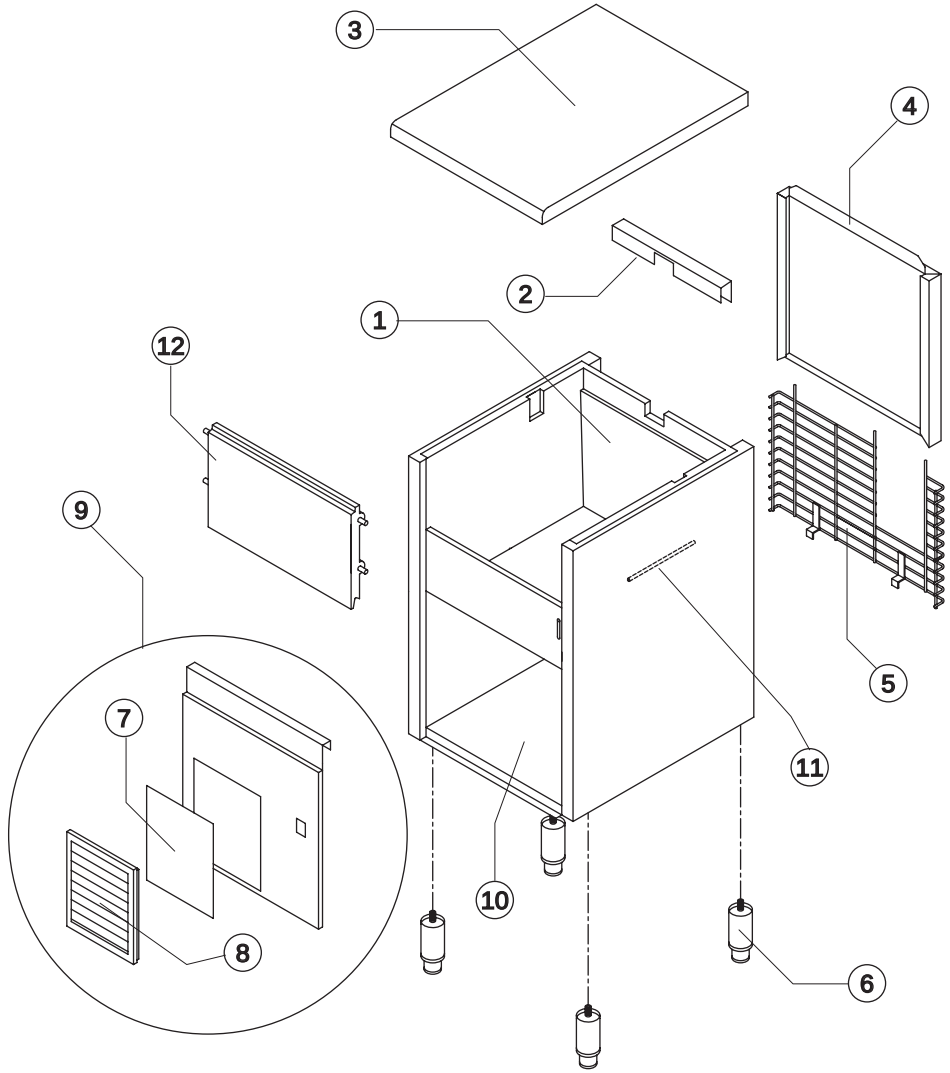

Ref.	Spare Description		Code
1	Foamed Cabinet Assy	See Table	-
2	Cover for Ice Exhoust		22592
3	Top Assembly		C22690
4	Rear Panel Assembly		C21202
5	Rear Grid		D12020
6	Adjustable Stainless Steel Foot		20613
7*	Filtering Panel		18106
8	Frame + Grid & Filter		C10205
9	Front Grid Panel		C22510
10	Base Plate		21284
11	Bulbe-holder Pipe		20522
12	Door Assy		C10275

Ref. 1 - Foamed Cabinet Assy

Condensation	Code
Air	C11098A
Water	C11098W

Rev. 15 - 22/01/2014

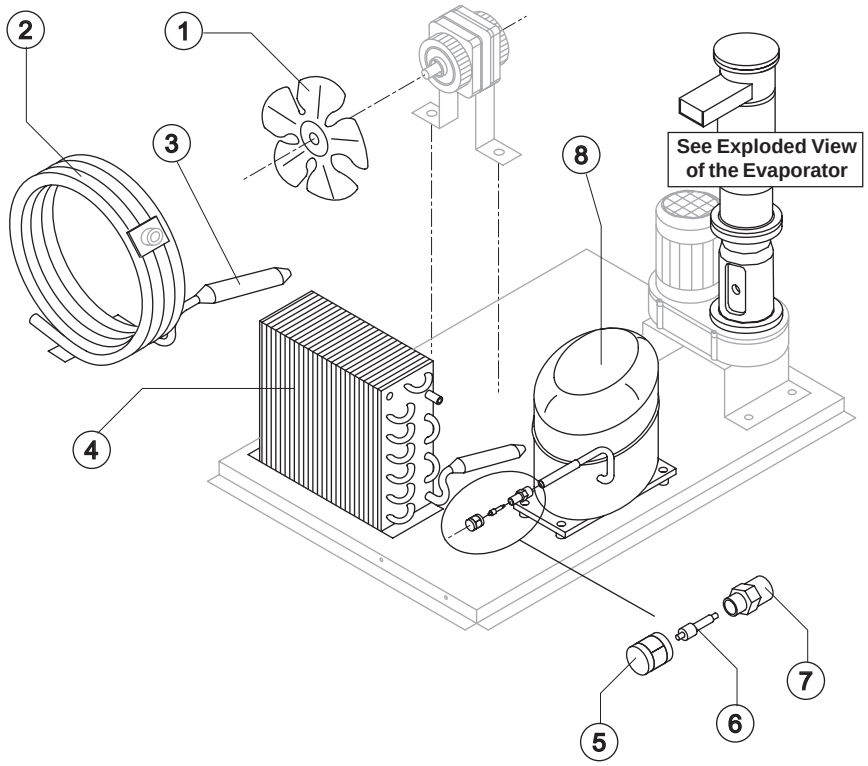

Common Parts

Ref.	Spare Description		Code
3*	Molecular Drier		14009
8	Compressor	See Table	-
5*	Vacuum-Charge Valve Plug		14006
6*	Vacuum-Charge Valve Device		14005
7	Vacuum-Charge Valve Body		14007

Parts for Air-Cooled Version Only

Ref.	Spare Description		Code
1	Suckingh Fan		20031
4	Air Condenser	Current version	20558
4	Air Condenser	Till s/n. 347947	20175

Parts for Water-Cooled Version Only

Ref.	Spare Description	Code
1	Sucking Fan	10213
2	Water Condenser	14014

Ref. 8 - Compressor

Voltage	Code
T11	23832
T12	23578A
T13	23679
T19	23679

Rev. 15 - 22/01/2014

EVAPORATOR

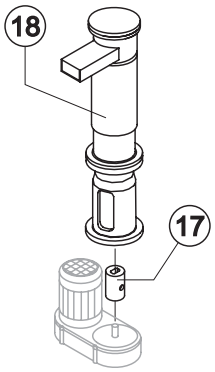

C11140

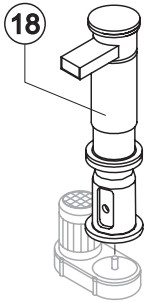

KITNEVGB

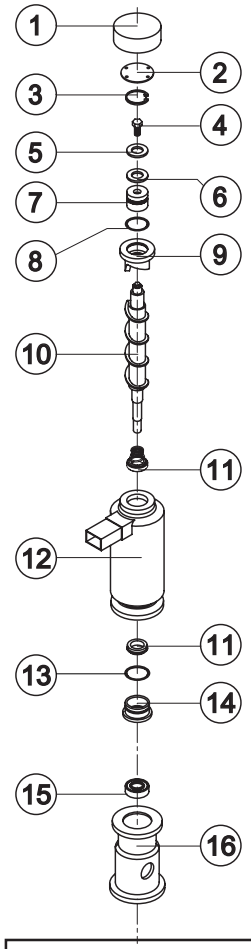

For Complete Evaporator, order C11140.
Till s/n. 223592 order code KITNEVGB.

Ref.	Spare Description (from s/n. 211898)		Code
1	Insulating Cap		18170
2	Closing Disk		22825
3	Seeger		20043
4	Stainless Steel Screw		20663
5	Shimming Disk		22826
6	Self-Lubricating Disk		20631
7	Stainless Steel Thrust Bearing		20686
8	OR Gasket 3087		20688
9	Ice Breaker		20626
10	Auger	Current Version	20783
10	Auger with Screw	Till s/n. 223592	C20783
11	Ceramic Seal		20937
12	Insulated Evaporator		C11107
13	OR Gasket 3162 NBR70		20429
14	Reduction Ring	Current Version	20785
14	Reduction Ring	Till s/n. 223592	20624
15	Stainless Steel Bearing	Current Version	20782
15	Stainless Steel Bearing	Till s/n. 223592	20045
16	Flange		20629
17	Joint	Current Version	D20784
17	Joint	Till s/n. 223592	D20630
18	Evaporator Assy	Current Versio	C11140
18	Evaporator Assy	Till s/n. 223592	KITNEVGB

Rev. 15 - 22/01/2014

HYDRAULIC CIRCUIT

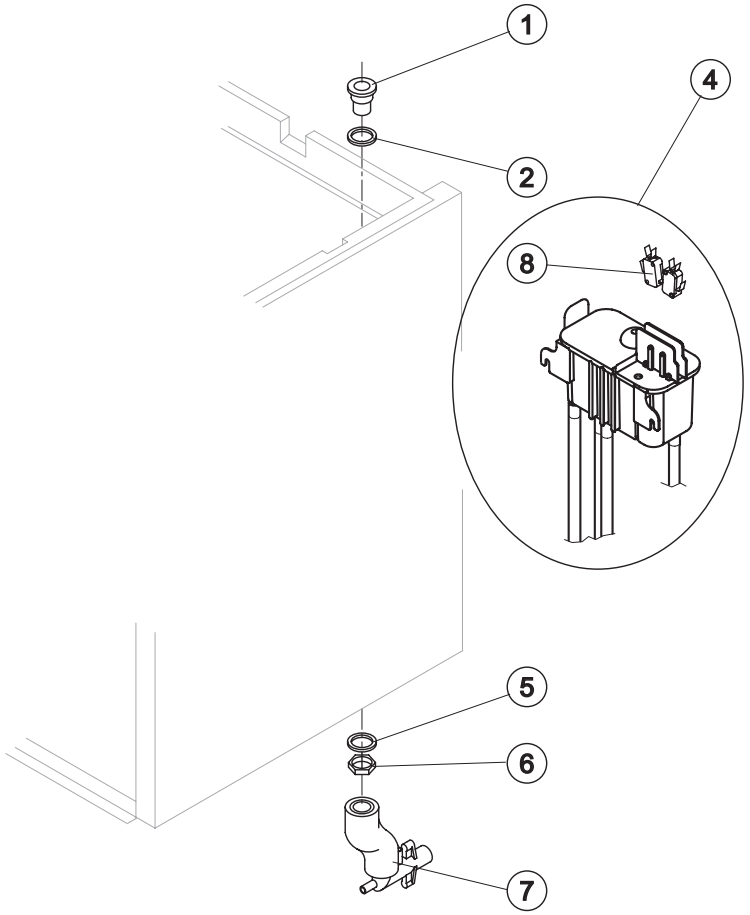

Common Parts

Ref.	Spare Description	Code
1	Water Outlet Nipple	10472
2	Silicone Gasket	13006
4*	Double Switch Basin Assembly	C10707
5	Semirigid Polyethylene Gasket	13007
6	Bin Discharge Nut	10096
8	Microswitch	23055

Parts for Air-Cooled Version Only

Ref.	Spare Description	Code
7	Discharges Manifold	C10235

Parts for Water-Cooled Version Only

Ref.	Spare Description	Code
7	Discharges Manifold	C10240

Rev. 15 - 22/01/2014

ELECTRIC PARTS

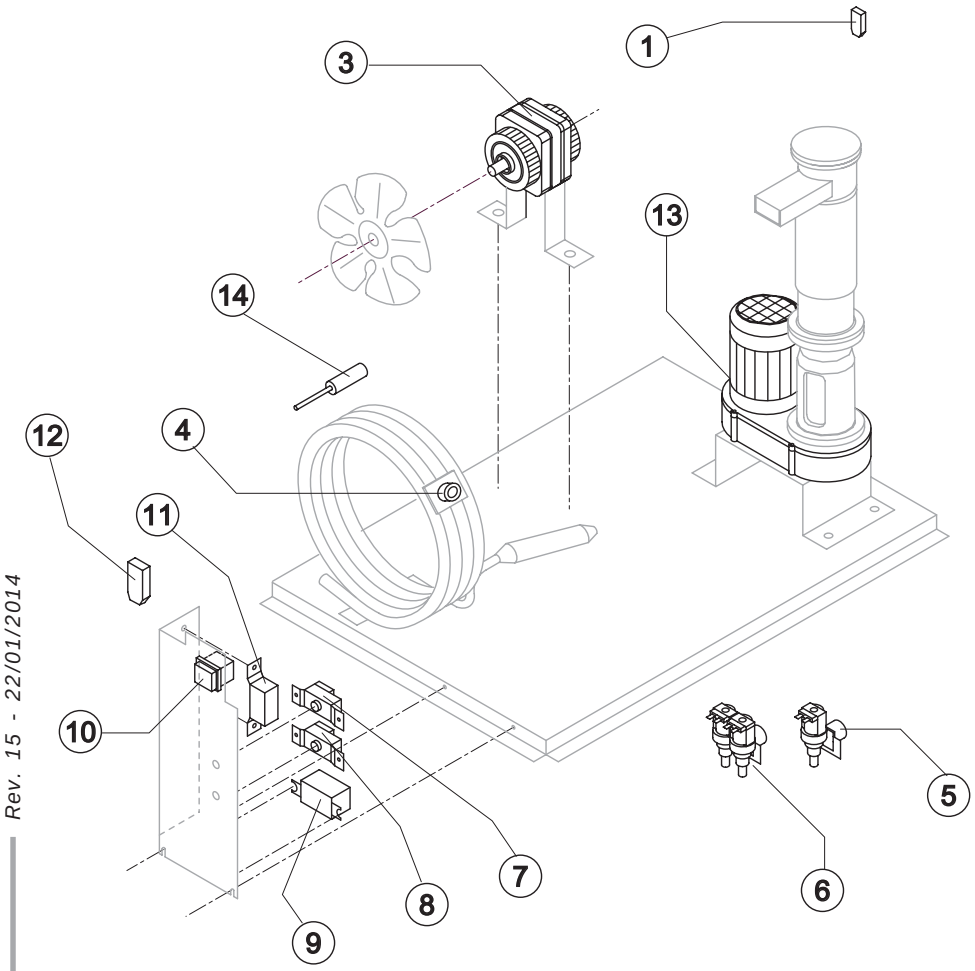

Rev. 15 - 22/01/2014

Common Parts

Ref.	Spare Description		Code
1	Anti Radio Interference Filter	T11	C23457
3*	Fan Motor	See Table	-
7*	Bin Thermostat		R23005
8*	Evaporator Thermostat	Till s/n. 613004	R23034
9*	Relay	See Table	-
10*	Green Light Switch (On-Off)		23327
11*	Condenser Pressure Switch	See Table	-
12	Anti Radio Interference Filter	T11	C23459
13	Gearmotor	See Table	-
14	Low pressure safety switch	From s/n. 613005	23909

Parts for Air-Cooled Version Only

Ref.	Spare Description		Code
5*	1 Way- Water Inlet Valve	See Table	-

Parts for Water-Cooled Version Only

Ref.	Spare Description		Code
4*	Safety Thermostat		C23114
6*	2 Ways- Water Inlet Valve	See Table	-

Ref. 3 - Fan Motor*

Voltage	Air	Water
T11	23067	23029
T12	23681	23029
T13	23621	23683
T19	23621	23683

Ref. 5 - 1 Way-Water Inlet Valve*

Voltage	Code
T11	23115
T12	23115
T13	23410
T19	23410

Ref. 6 - 2 Ways-Water Inlet Valve*

Voltage	Code
T11	23010
T12	23010
T13	23261
T19	23261

Ref. 9 - Relay*

Voltage	Code
T11	23190
T12	23190
T13	23557
T19	23557

Ref. 11 - Cond. Pressure Switch*

Voltage	Code
T11	23175
T12	23175
T13	23175
T19	23680

Ref. 13 - Gearmotor

Voltage	Current Version	Till s/n. 594455
T11	231030	R231030
T12	231030	R231030
T13	231056	R231056
T19	231056	R231056