DUNAVOX

Wine Cooler

DAB-25.62 DB.TO
DAB-25.62 DW.TO
DAB-25.62 DSS.TO

I

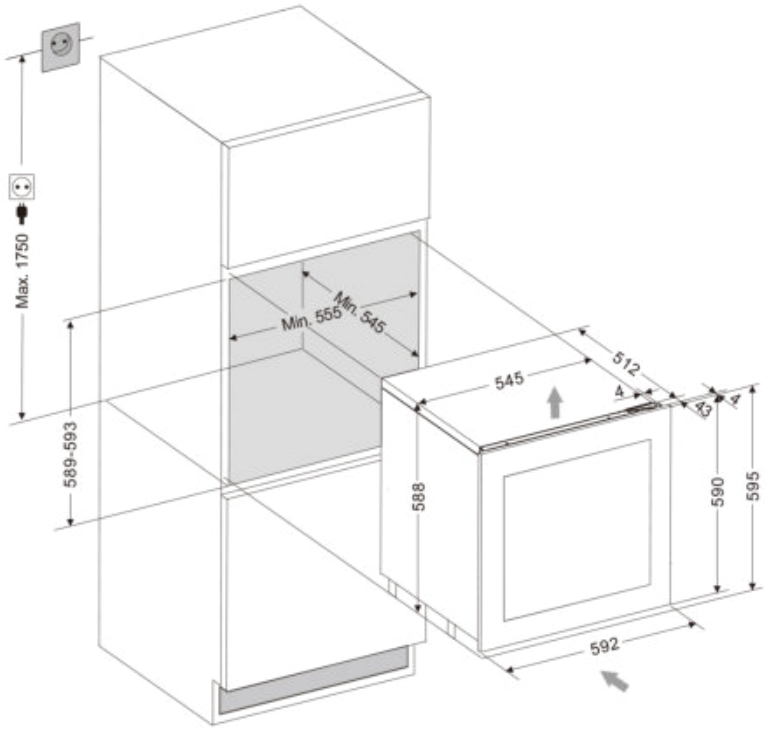



2018.v.1 Copyright Dunavox Kft. All rights reserved. www.dunavox.com

DUNAVOX

Wine Cooler

DAB-25.62 DB.TO
DAB-25.62 DW.TO
DAB-25.62 DSS.TO

I

Front View



Side View

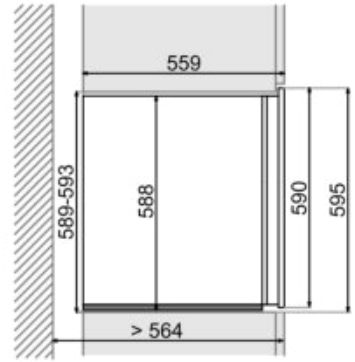

Top View

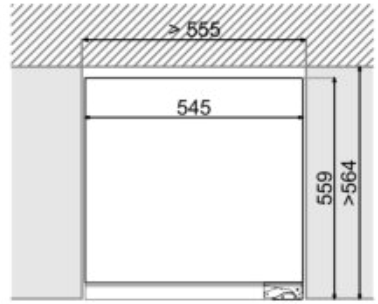

Remove



2018.v.1 Copyright Dunavox Kft. All rights reserved. www.dunavox.com