NW508

NW Series Modular Cube Ice Maker

NW308 | NW458
NW508 | NW608
NW808
NW1008





Vertical Cube System



T304 Stainless Steel Panels

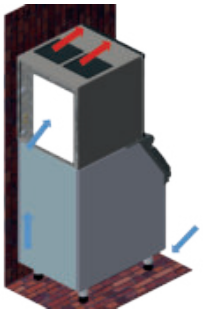

SPACE SAVING

Hot air exit from the top.
No need of side clearance from walls or other equimpent.
Optimized footprint.
Natural direction of hot air flow, from bottom to top.





Proximity Condenser Air Filter

- RESET
- HIGH PRESSURE
- ALARM
- BIN FULL
- ICE MAKING
- ON/ OFF



Auto-alert Indicator Lights



ONE TOUCH CLEANING

Streamlined cleaning process starting with one push of a button.
No more need of constant monitoring by a technician.

24 Hour Volume Production

Air Cooled			Water Cooled		
50°F/10°C 50°F/10°C lb/kg	Air Water	AHRI 90°F/32°C 70°F/21°C lb/kg	70°F/21°C 50°F/10°C lb/kg	Air Water	AHRI 90°F/32°C 70°F/21°C lb/kg
506/230		352/160	--/--		--/--

Cube Ice



Full Cube - 12g (26.5 x 26.5 x 26 mm)
Half Cube - 6g (13 x 26.5 x 26 mm)

Modular Bin Options

NB 193



Storage Capacity: 129 kg
No Bin Top needed

NB 393



Storage Capacity: 178 kg
Bin Top CBT30EMCD needed

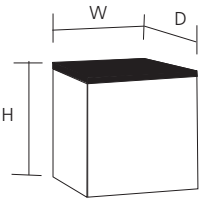

W x D x H mm
558 x 610 x 609

CE

CERTIFIED ISO 9001:2008

www.scotsman-ice.it
www.scotsman-china.com

Scotsman Ice Systems

25/02/17

Dimension

FRONT VIEW

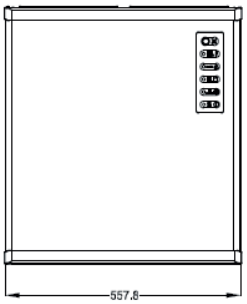

SIDE VIEW

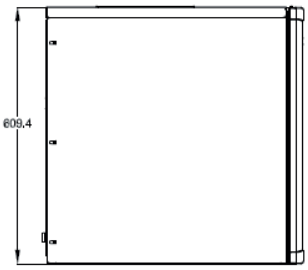

BACK VIEW

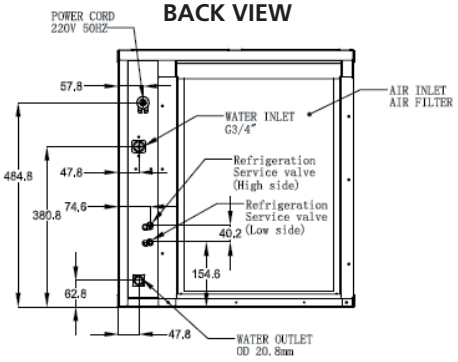

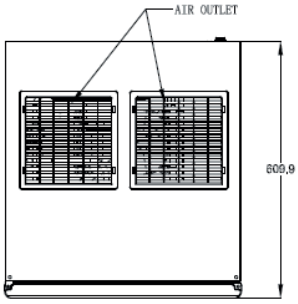

TOP VIEW

Specifications

		[Btu/h]	[W]	[Ømm²]	[V/Hz/Ph]	[W]	FUSE	[kwh/100kg]	[L/100kg]	[kg]	[lb]	[kg]	[lb]
NW508 AS		8900	2600	3x1.5	230/50/1	1250	16A	13.8	142.4	65	143	80	176
NW508 WS		--	--	--	--	--	--	--	--	--	--	--	--
NWH508 AS		8900	2600	3x1.5	230/50/1	1250	16A	13.8	142.4	65	143	80	176
NWH508WS		--	--	--	--	--	--	--	--	--	--	--	--

Performance Table

NW508 AS
NWH508 AS

°C / °F	50° / 10°	60° / 15°	70° / 21°	90° / 32°	
10°	230	--	--	--	kg
50°	506	--	--	--	lb
21°	215	--	--	--	kg
70°	473	--	--	--	lb
32°	--	--	160	--	kg
90°	--	--	352	--	lb
38°	--	--	--	120	kg
100	--	--	--	264	lb

24h

Operating Range

Minimum	Maximum
10°C (50°F)	40°C (103°F)
5°C (41°F)	35°C (95°F)
-10%	+10%
1 BAR 14 psi	5 BAR 70 psi

IMPORTANT NOTICE:
Models and specifications are subject to change without notice.
This spec sheet is meant for commercial purpose only.
For technical documentation please refer to our service manuals.

www.scotsman-ice.it
www.scotsman-china.com

Scotsman
Ice Systems