Scotsman®
Ice Systems

AF 103

Other models in this range:
AF 80 - AF 124
AF 156 - AF 206

Self Contained Ice Machine up to 108 kg



Features

- Up to 108 kg (238 lb) of flake ice production per day
- Up to 30 kg (66 lb) built-in ice storage
- Electronically controlled operation, with self-diagnostic functions with external alarm lights providing operational information for early alert and fast diagnosis of operating issues
- External Components constructed from corrosion-resistant stainless steel crafted for optimal aesthetic appeal through superior fit and finish
- Ergonomically convenient, slanted & disappearing storage bin door
- Front Access for Easier Maintenance
- Front-in, front-out airflow allows for built-in installations
- CFC Free R-404A Refrigerant
- 90 mm (3 1/2") legs included

AF 103 Technologies

Crystal Flake-ice Evaporator · Built-in Facility · Total Hygiene Concept · Electronic Rotation Control · agion



SS AISI 304



Electronic

		24h 10°C : 10°C [kg]	[lb]	21°C : 15°C [kg]	[lb]	[kg]	[lb]
AF 103 AS		105	231,5	98	216	30	66
AF 103 WS		108	238	98	216	30	66

[WxDxH mm]
592x622x997/1077

[WxDxH inches]
235/16"x241/2"x391/4-4212/32"

[V/Hz/ph]
230/50/1

R 404A

This product qualifies for the following listings:

Certified ISO 9001

Flake Ice

Residual water content 25%



Ice in its most natural form, made at a temperature just below zero degrees Celsius, with 25% residual water content, making it very moist.
Its flake shape makes it extremely versatile and very simple to use effectively.

2 Years Warranty
Subject to certain limitations and exclusions

Download our free app ***Scotsman Ice***
Available on:
Apple store
Google play
Windows store
DOWNLOAD

www.scotsman-ice.it
www.scotsman-ice.com

6/2016

Scotsman
Ice Systems

AF 103

Other models in this range:
AF 80 - AF 124
AF 156 - AF 206

Self Contained Ice Machine up to 108 Kg

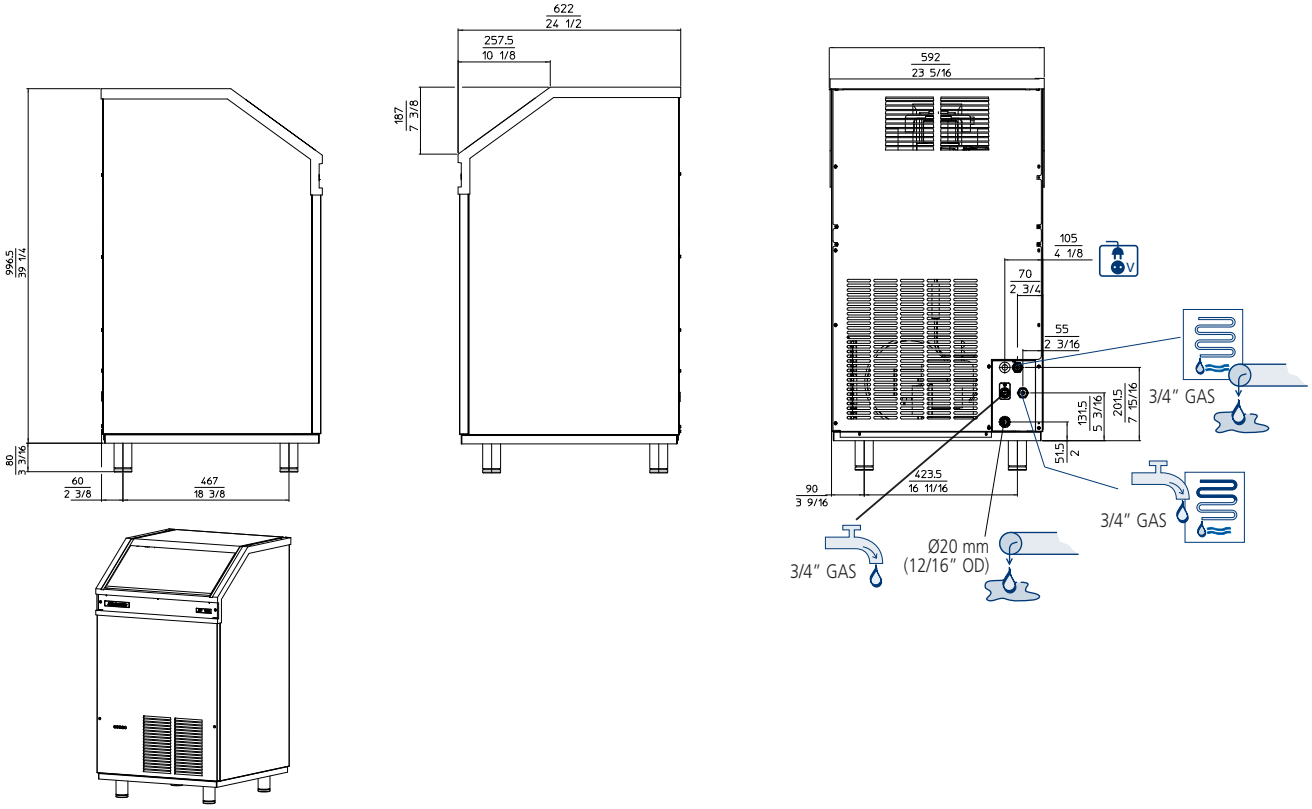

AF 103 AIR COOLED

°C \ °F	50° 10°	60° 15°	70° 21°	90° 32°	
10°	105	101	97	89	kg
50°	231,5	222,5	214	196	lbs
21°	102	98	94	86	kg
70°	225	216	207	189,5	lbs
32°	88	84	80	72	kg
90°	194	185	176	159	lbs
38°	82	78	74	66	kg
100	181	172	163	145,5	lbs

24h

AF 103 WATER COOLED

°C \ °F	50° 10°	60° 15°	70° 21°	90° 32°	
10°	108	100	92	76	kg
50°	238	220,5	203	167,5	lbs
21°	106	98	90	74	kg
70°	233,5	216	198,5	163	lbs
32°	105	97	89	73	kg
90°	231,5	214	196	161	lbs
38°	103	95	87	71	kg
100	227	209,5	192	156,5	lbs

24h

	Minimum	Maximum
	10°C (50°F)	43°C (110°F)
	5°C (41°F)	38°C (100°F)
V	-10%	+10%
	1 bar 14 psi	5 bar 70 psi

		[Btu/h]	[W]	[Ømm²]	[W]	FUSE	[kWh] - 100 kg	[l/h]	[gal/h]	[kg]	[lb]	[kg]	[lb]
AF 103 AS		3270	960	3 x 1.5	470	10	12,5	3,3	0,88	66	145	74	163
AF 103 WS		3270	960	3 x 1.5	360	10	9,6	31,8	8,40	68	150	76	167

IMPORTANT NOTICE:
Models and specifications are subject to change without notice.
This spec sheet is meant for commercial purpose only.
For technical documentation please refer to our service manuals.

www.scotsman-ice.it
www.scotsman-ice.com

Scotsman
Ice Systems

Milano Madrid Chicago Dubai Singapore Shanghai Johannesburg

6/2016