Scotsman®
Ice Systems

EC 50

Other models in this range:
EC10 - EC15 - EC25 - EC30 - EC40

Split versions:
ES1014 - ES2040 - ES4050

Subcooled Scale Ice Machine
Compact Vertical Evaporator 5000 kg/24h



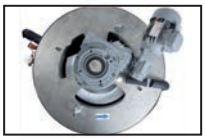



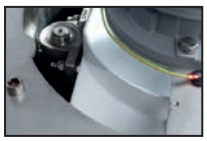

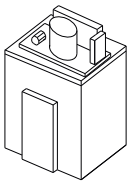

Cold Room

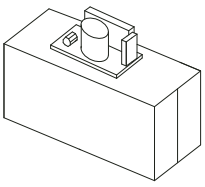

Container

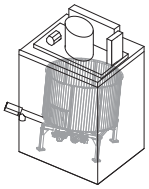

Silos

Features

• Evaporator: cylinder made of AISI304 stainless steel, insulation made by polyurethane foam; external finishing in stainless steel; water distributor and drip-tray in ABS food-proof.
• Cover in stainless steel.
• Base in aluminium alloy (Peralluman).
• Rotating shaft and ice scraper made of stainless steel with self-lubricating stainless steel bearings.
• Drive motor with direct connection with gear reducer.
• Three phase water pump; Water level sensor on water distributor.
• Floating valve for water supply; Overflow connection on the base; Drip pan in ABS plastic.
• Thermostatic expansion valve with external pressure regulation.
• Salt dosing pump.
• Mechanical filter – on water pipe supply.

Condensing Unit

• Heavy basement frame in galvanized steel.
• Semi hermetic reciprocating compressor Bitzer 6G-30.2Y (EC50), 6FE-44Y (EC50H), air cooled condenser with fans with pressure regulating control.
• Liquid receiver with safety valve.
• Heat exchanger.
• Liquid filter, sight glass and solenoid valve.
• Oil separator; HP pressure switch/LP Pressure switch; differential oil pressure switch.
• Check valves on main components.

Electrical Control Panel

• Epoxy painted box IP54.
• General power switch; Emergency button with lighting for working conditions and alarms.
• Transformer for auxiliary contactors; Power contactors with thermal protection.
• Inverter and ammetric protection for drive motor speed control.
• Auxiliary contactors; timers and protections for drive motor, water level, water pumps, compressor pump down; oil thermostat control.
• Terminal board for electrical connections.

		24h / 1,8-2,2 mm [kg]	[lbs]
EC 50 AS	25°/15°C - 77°/60°F	5000	11202
EC 50H AS	35°/25°C - 95°/77°F	4500	9921

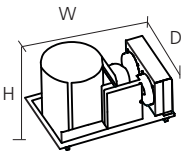

[WxDxH mm]
3200 x 2000 x 1680
[WxDxH inches]
126" x 78 6/8" x 66 1/8"



Ice scales are the coldest form of ice.
Formed at -5° to -9°C, they are very dry, with a residual water content of less then 2%.
Scales look like fragments of glass, have an irregular shape and a thickness that can be adjusted from 1,4 to 2,2 mm.

R 404 A

[v/Hz/ph]
400/50/3+N

1 Year Warranty
Subject to certain limitations and exclusions

This product qualifies for the following listings:

Certified ISO 9001:2008

2/2015

Scotsman®
Ice Systems

EC 50

Other models in this range:
EC10 - EC15 - EC25 - EC30 - EC40

Split versions:
ES1014 - ES2040 - ES4050

Subcooled Scale Ice Machine
Compact Vertical Evaporator 5000 kg/24h

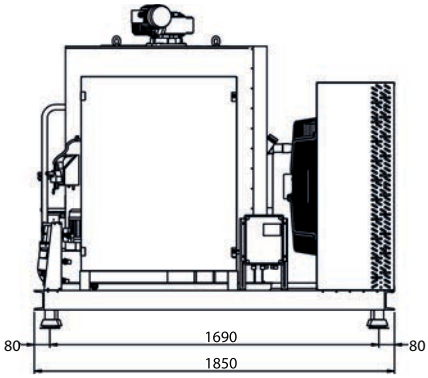

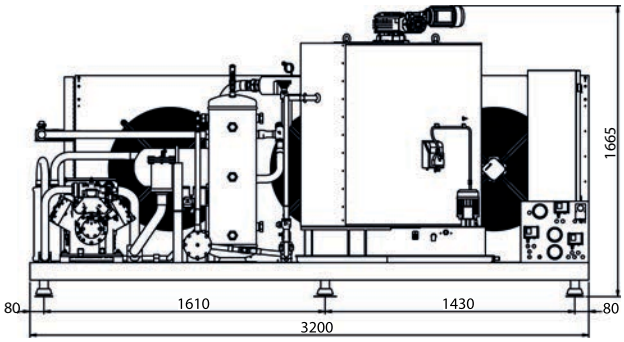

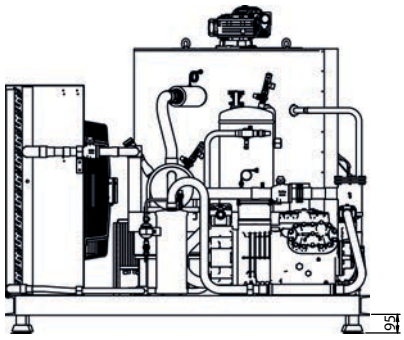

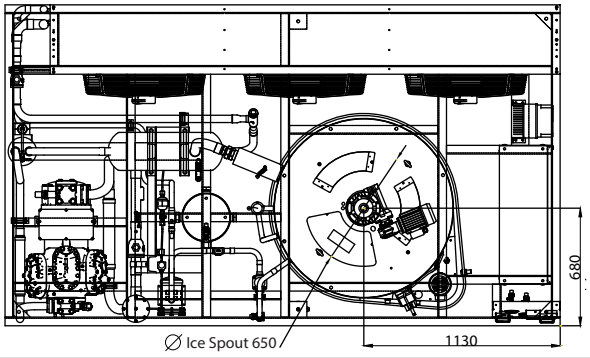

Clearence for maintenance

Around cylinder minimum	500 mm
Above drive motor minimum	500 mm
Above ice scraper minimum	1000 mm

	Minimum	Maximum
	5°C (41°F)	35°C (109°F)
	5°C (41°F)	30°C (86°F)
V	-10%	+10%
	1 bar 14 psi	5 bar 70 psi

Technical Features	
Water supply:	Fresh
Air Flow m3/h:	20400
Refrigerant Charge kg:	60
Category PED (Dir. 97/23/CE):	III

	[V/Hz/ph]	[W]	[A]	[Ømm²]	[kg]	[lbs]	[kg]	[lbs]	[shipping size mm]
EC 50 AS	400/50/3N	27200	48,00	5 x 6,0	1800	3968	1950	4300	3500x2150x1960 - (14,75 m³)
EC 50H AS	400/50/3N	30200	59,14	5 x 6,0	1900	4189	2220	4895	3500x2150x1960 - (14,75 m³)

IMPORTANT NOTICE:
Models and specifications are subject to change without notice.
This spec sheet is meant for commercial purpose only.
For technical documentation please refer to our service manuals.

www.scotsman-ice.it
www.scotsman-ice.com

Scotsman®
Ice Systems

Milano Madrid Chicago Dubai Singapore Shanghai Johannesburg

3/2015