IMPORTANT NOTE:
Locate the Specification Label on unit to determine exact Model Name and electrical specifications. This information is needed to identify the correct replacement parts. See exploded view illustration(s) for Specification Label location.

⚠ CAUTION

Use of replacement parts other than those supplied by Hatco Corporation may result in damage to unit or injury to personnel and will void all warranties.

Multi-Product Warming Station

MPWS Series

Model Name	Page
MPWS-36	2
MPWS-45	2

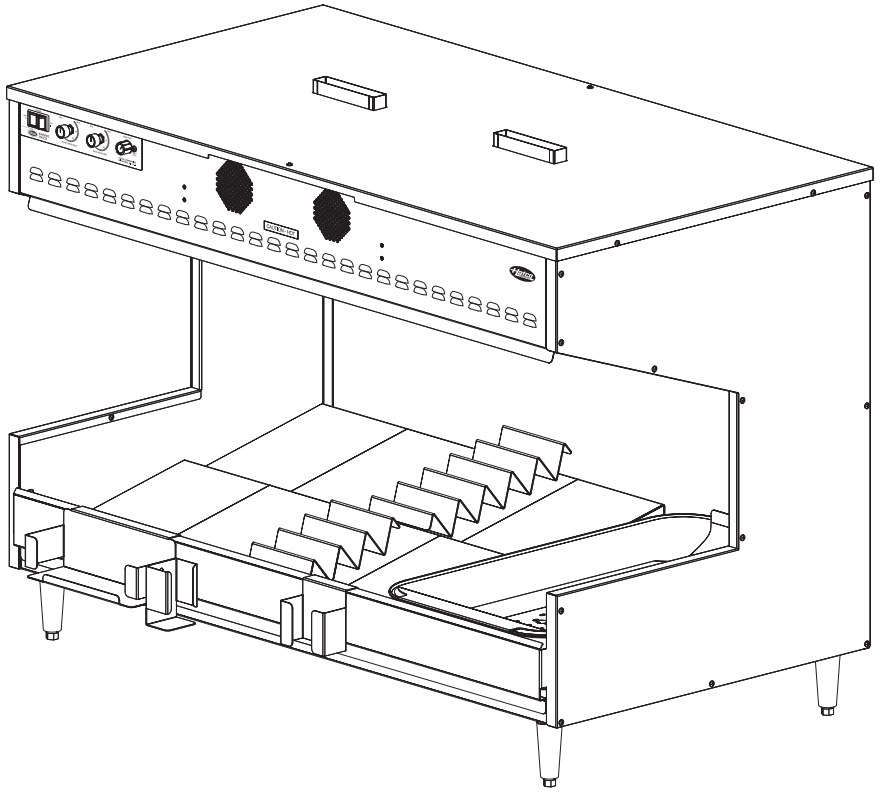

Replacement Parts List

© 2015 Hatco Corporation

HATCO MULTI-PRODUCT WARMING STATION

Models MPWS-36 and MPWS-45

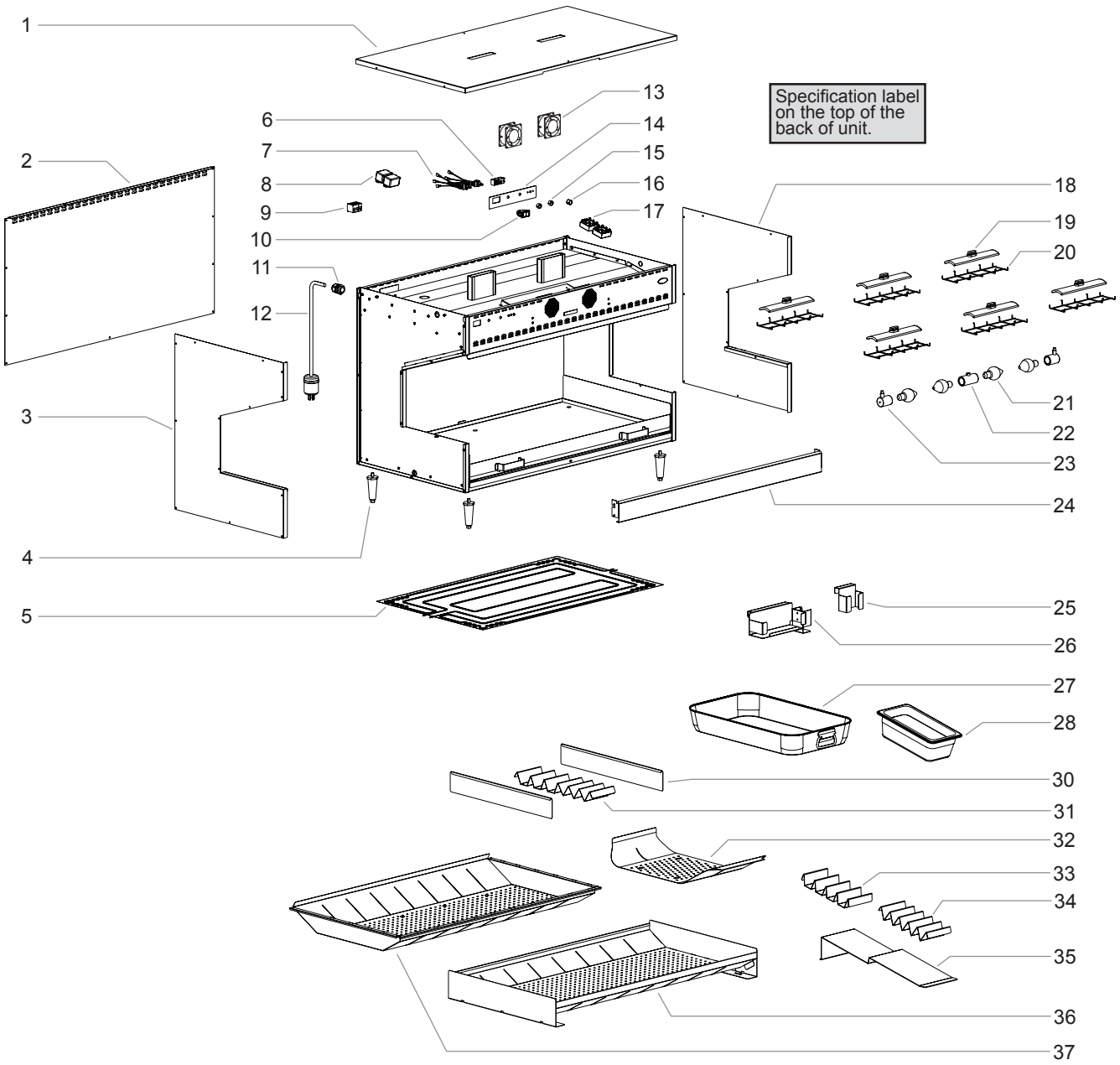

Parts for Models MPWS-36 and MPWS-45

Item	Description	Part No.	Qty.
1	Top Cover		
	MPWS-36	04.25.515.00	1
	MPWS-45	04.25.514.00	1
2	Back Cover		
	MPWS-36 *	04.25.677.00	1
	MPWS-45 †	04.25.676.00	1
3	Side Cover, Left Side	04.25.505.00	1
4	Legs, Adjustable 4"	05.30.007.00	4
5	Element, Blanket		
	MPWS-36		
	120/208 and 230 V	02.05.220.00	1
	120/240 V	02.05.896.00	1
	MPWS-45		
	120/208 and 230 V	02.05.218.00	1
	120/240 V	02.05.895.00	1
6	Thermostat	R02.16.066.00	1
7	Potentiometer	02.01.117.00	2
8	Relay	02.01.098.00	2
9	Terminal Block	R02.15.046.00	1
10	Rocker Switch	02.19.015.00	1
11	Cord Grip	02.20.290.00	1
12	Power Cord		
	L14-20P (120/208 and 120/240 V)	02.18.132.00	1
	No Plug (230 V)	02.18.103.00	1
13	Fan, Cooling	02.12.010.00	2
14	Label, Control	07.03.627.00	1
15	Knob, Infinite	05.30.042.00	2
16	Knob, Thermostat	05.30.039.00	1
17	Solid State Infinite	R02.01.102.00	2
18	Side Cover, Right Side	04.25.503.00	1
19	Element, Ceramic		
	120/208 and 230 V	02.07.009.00	6
	120/240 V	02.07.023.00	6
20	Guard, Ceramic Element	04.25.362.00	6

Item	Description	Part No.	Qty.
21	Bulb		
	120/208 and 120/240 V	02.30.043.00	4
	230 V	02.30.058.00	4
22	Lamp Holder, Dual	02.30.047.00	1
23	Lamp Holder, Single	02.30.051.00	2
24	Pan Stop		
	MPWS-36	04.25.517.00	1
	MPWS-45	04.25.516.00	1
25	Scoop Holder	04.25.413.00	1
26	Bag and Tong Holder	04.25.416.00	1
27	Pan, Stainless Steel	04.25.528.00	1–2
28	Pan, Plastic		
	1/4 Size	04.09.227.00	1
	1/2 Size	04.09.225.00	1
29	Lid, Plastic Pan (not shown)		
	1/4 Size	04.09.233.00	1
	1/2 Size	04.09.226.00	1
30	Divider	04.25.545.00	3–4
31	Ribbon, 6-Pleat Bag/Box	04.25.315.00	1–4
32	Trivet	04.25.501.00	1–2
33	Ribbon, 4-Pleat Box	04.25.356.00	1–4
34	Ribbon, 5-Pleat Bag	04.25.350.00	1–4
35	Riser, Angled	04.25.520.00	1–6
36	Trivet Stand		
	MPWS-36	04.25.571.00	1
	MPWS-45	04.25.572.00	1
37	Large Fry Trivet		
	MPWS-36	04.25.544.00	1
	MPWS-45	04.25.547.00	1
	Wiring Diagram		
	120/208 and 120/240 V	10-01-483	
	230 V	10-01-1016	

The shaded areas contain information for **International models only.**

***** Units with Date Code 1450 or earlier, use P/N 04.25.519.00.

† Units with Date Code 1450 or earlier, use P/N 04.25.518.00.

NOTE: The last four digits in a ten digit numerical serial number are the manufacturing date code.
Example: Serial number 9625061331 has a date code of "1331" which indicates the following: 1331

Week Thirty-One
Year 2013

HATCO AUTHORIZED PARTS DISTRIBUTORS

ALABAMA
Jones McLeod Appl. Svc.
Birmingham 205-251-0159

ARIZONA
Service Solutions Group
Phoenix 602-234-2443

Byassee Equipment Co.
Phoenix 602-252-0402

CALIFORNIA
Industrial Electric
Commercial Parts & Service, Inc.
Huntington Beach 714-379-7100

Chapman Appl. Service
San Diego 619-298-7106

P & D Appliance
Commercial Parts & Service, Inc.
S. San Francisco 650-635-1900

COLORADO
Hawkins Commercial Appliance
Englewood 303-781-5548

FLORIDA
Whaley Foodservice Repair
Jacksonville 904-725-7800

3Wire Nass Service Co., Inc.
Orlando 407-425-2681

B.G.S.I.
Pompano Beach 954-971-0456

Comm. Appliance Service
Tampa 813-663-0313

GEORGIA
TWC Services
Mableton 770-438-9797

Heritage Service Group
Norcross 866-388-9837

Southeastern Rest. Svc.
Norcross 770-446-6177

HAWAII
Burney's Comm. Service, Inc.
Honolulu 808-848-1466

Food Equip Parts & Service
Honolulu 808-847-4871

ILLINOIS
Parts Town
Lombard 708-865-7278

Eichenauer Elec. Service
Decatur 217-429-4229

Midwest Elec. Appl. Service
Elmhurst 630-279-8000

Cone's Repair Service
Moline 309-797-5323

INDIANA
GCS Service
Indianapolis 800-727-8710

IOWA
Goodwin Tucker Group
Des Moines 515-262-9308

KENTUCKY
Service Solutions Group
Lexington 859-254-8854

Service Solutions Group
Louisville 502-451-5411

LOUISIANA
Chandlers Parts & Service
Baton Rouge 225-272-6620

MARYLAND
Electric Motor Service
Baltimore 410-467-8080

GCS Service
Silver Spring 301-585-7550

MASSACHUSETTS
Ace Service Co., Inc.
Needham 781-449-4220

MICHIGAN
Bildons Appliance Service
Detroit 248-478-3320

Commercial Kitchen Service
Bay City 989-893-4561

Midwest Food Equip. Service
Grandville 616-261-2000

MINNESOTA
GCS Service
Minnetonka 800-822-2303 x20365

MISSOURI
General Parts
Kansas City 816-421-5400

Commercial Kitchen Services
St. Louis 314-890-0700

Kaemmerlen Parts & Service
St. Louis 314-535-2222

NEBRASKA
Anderson Electric
Omaha 402-341-1414

NEVADA
Burney's Commercial
Las Vegas 702-736-0006

Hi. Tech Commercial Service
N. Las Vegas 702-649-4616

NEW JERSEY
Jay Hill Repair
Fairfield 973-575-9145

Service Plus
Flanders 973-691-6300

NEW YORK
Acme American Repairs, Inc.
Brooklyn 718-456-6544

Alpro Service Co.
Brooklyn 718-386-2515

Appliance Installation
Buffalo 716-884-7425

Duffy's Equipment Services, Inc.
Buffalo 800-836-1014

3Wire Northern
Plattsburgh 800-634-5005

Duffy's Equipment Services, Inc.
Sauquoit 800-836-1014

J.B. Brady, Inc.
Syracuse 315-422-9271

NORTH CAROLINA
Authorized Appliance
Charlotte 704-377-4501

OHIO
Akron/Canton Comm. Svc. Inc.
Akron 330-753-6634

Service Solutions Group
Cincinnati 513-772-6600

Commercial Parts and Service
Columbus 614-221-0057

Electrical Appl. Repair Service
Brooklyn Heights 216-459-8700

E. A. Wichman Co.
Toledo 419-385-9121

OKLAHOMA
Hagar Rest. Service, Inc.
Oklahoma City 405-235-2184

Krueger, Inc.
Oklahoma City 405-528-8883

OREGON
Ron's Service, Inc.
Portland 503-624-0890

PENNSYLVANIA
Elmer Schultz Services
Philadelphia 215-627-5401

FAST Comm. Appl. Service
Philadelphia 215-288-4800

Appliance Installation & Service
Pittsburgh 412-809-0244

K & D Service Co.
Harrisburg 717-236-9039

Electric Repair Co.
Reading 610-376-5444

RHODE ISLAND
Marshall Electric Co.
Providence 401-331-1163

SOUTH CAROLINA
Whaley Foodservice Repair
Lexington 803-996-9900

TENNESSEE
Camp Electric
Memphis 901-527-7543

TEXAS
GCS Service
Fort Worth 800-433-1804

Armstrong Repair Service
Houston 713-666-7100

Cooking Equipment Specialist
Mesquite 972-686-6666

Commercial Kitchen Repair Co.
San Antonio 210-735-2811

UTAH
La Monica's Rest. Equip. Service
Murray 801-263-3221

VIRGINIA
Daubers
Norfolk 757-855-4097

Daubers
Springfield 703-866-3600

WASHINGTON
3Wire Restaurant Appliance
Seattle 800-207-3146

WISCONSIN
A.S.C., Inc.
Madison 608-246-3160

A.S.C., Inc.
Milwaukee 414-543-6460

CANADA

ALBERTA
Key Food Equipment Service
Edmonton 780-438-1690

BRITISH COLUMBIA
Key Food Equipment Service
Vancouver 604-433-4484

Key Food Equipment Service
Victoria 250-920-4888

MANITOBA
Air Rite, Inc.
Winnipeg 204-895-2300

NEW BRUNSWICK
EMR Services, Ltd.
Moncton 506-855-4228

ONTARIO
R.G. Henderson Ltd.
Toronto 416-422-5580

Choquette - CKS, Inc.
Ottawa 613-739-8458

QUÉBEC
Choquette - CKS, Inc.
Montreal 514-722-2000

Choquette - CKS, Inc.
Québec City 418-681-3944

UNITED KINGDOM

Marren Group
Northants +44(0)1933 665313

HATCO CORPORATION
P.O. Box 340500
Milwaukee, WI 53234-0500 U.S.A.
800-558-0607 414-671-6350
Parts and Service Fax 800-690-2966
International Fax 414-671-3976
partsandservice@hatcocorp.com
www.hatcocorp.com

24/7 24 Hour 7 Day Parts and Service Assistance available in the United States and Canada by calling 800-558-0607.

Printed in U.S.A. January 2015 Form No. MPWSRP-0115