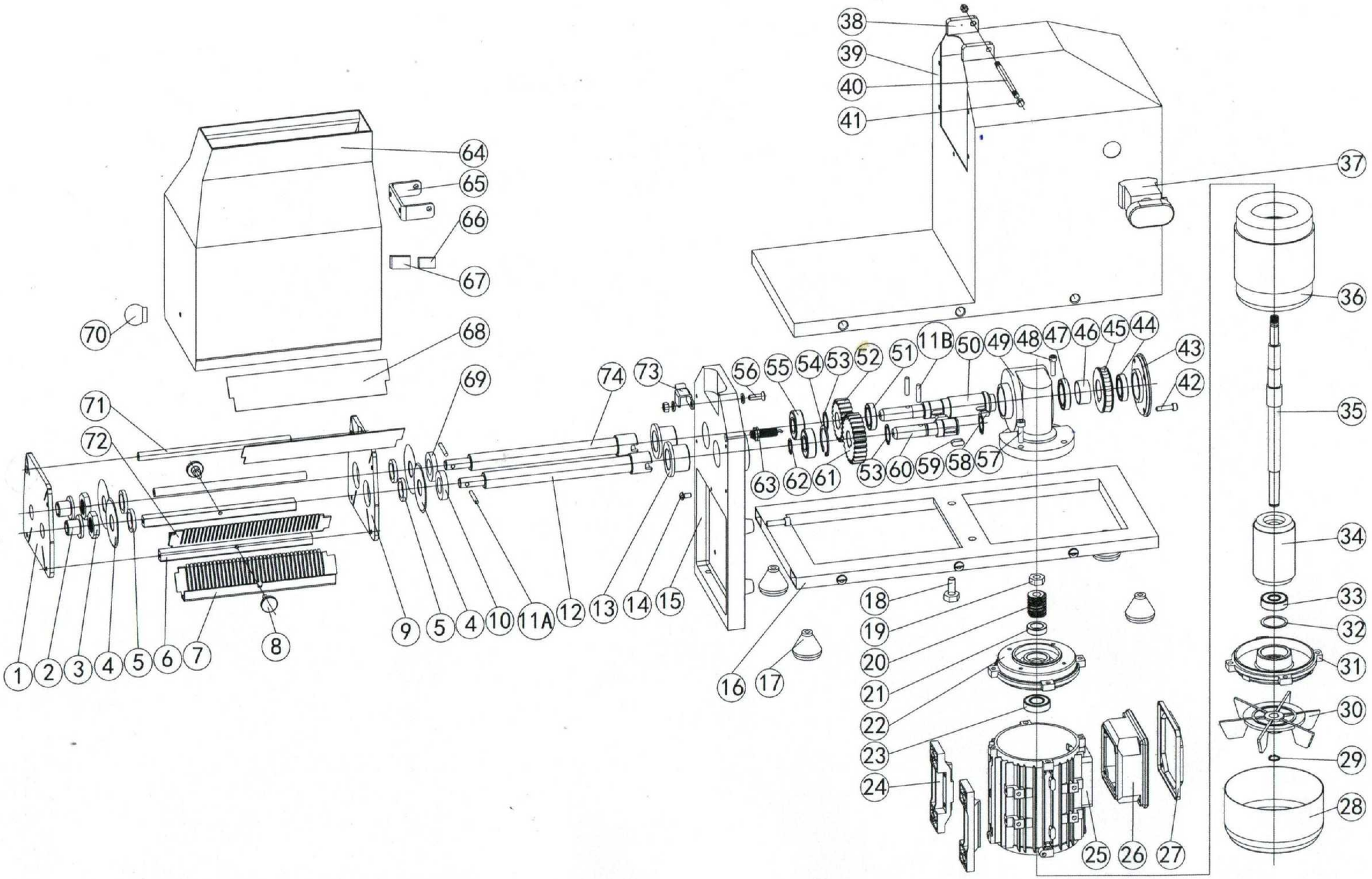
1
2
3
4
5
6
7
8
9
5
4
10
11A
12
13
14
15
16
17
18
19
20
21
22
23
24
25
26
27
28
29
30
31
32
33
34
35
36
37
38
39
40
41
64
65
66
67
68
69
70
71
72
74
73
56
55
54
53
52
51
11B
50
49
48
47
46
45
44
43
42
63
62
61
53
60
59
58
57

MT-8SH SPARE PARTS LIST

Part No.	Part Name	Part No.	Part Name	Part No.	Part Name
1	front plate	26	electric box	51	φ35xφ25x7 oil seal
2	shaft protecter A	27	electric box cover	52	reversing small gear
3	nut	28	fan cover	53	φ20 C-type snap ring
4	blade	29	φ12 C-type snap ring	54	φ35 C-type snap ring
5	spacer	30	fan	55	6202 bearing
6	square mandril	31	motor back cover	56	M5x20 screw
7	left stripper comb	32	ripple gasket	57	M6x20 screw
8	hand wheel	33	6201 bearing	58	5x5x12 flat key
9	back plate	34	rotor	59	6x6x15 flat key
10	right closing ring	35	motor shaft	60	reversing big gear shaft
11	pin	36	stator	61	reversing big gear
12	right shaft	37	switch	62	φ15 C-type snap ring
13	shaft protecter B	38	connect plate	63	microswitch
14	M5x10 screw	39	s/s case	64	s/s shield
15	bracket	40	spindle	65	connect bracket
16	base plate	41	M6 nut	66	20x15x3 magnet
17	rubber foot	42	motor screw	67	magnet base
18	M8x20 screw	43	gear box cover	68	guide plate
19	M10 nut	44	6804 bearing	69	left closing ring
20	worm	45	worm gear	70	knob
21	φ24xφ15x7 oil seal	46	spacer	71	round mandril
22	motor front cover	47	6805 bearing	72	right stripper comb
23	6002 bearing	48	M5x16 screw	73	lock
24	motor foot	49	gear box	74	left shaft
25	motor case	50	output shaft	75	

MODEL	PICTURE	DESCRIPTION
TDA	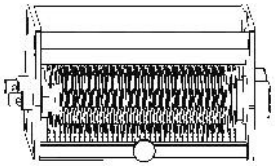	MEAT TENDERIZER ATTACHMENT A
TDB	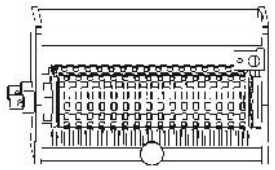	MEAT TENDERIZER ATTACHMENT B
MSA	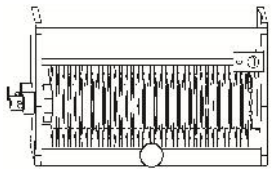	MEAT STRIPPER ATTACHMENT