# APTE-89P (L-LC-LR-LRC-R)

EFT908

CATALOGO PARTI DI RICAMBIO
CATALOGUE PIECES DETACHEES
ERSATZTEILKATALOG
SPARE PARTS CATALOGUE



GAS
GAZ

ELETTRICO
ELECTRIQUE
ELEKTRISCHE
ELECTRIC

TOP

CON ARMADIO
AVEC CABINET
MIT SCHRANK
WITH CABINET

CON FORNO
AVEC FOUR
MIT OFEN
WITH OVEN

The information and images above are considered not binding. The manufacturer reserves the right to make changes at any time without notice.

Catalogo parti di ricambio valido
dalla matricola 1144218 (19.01.2017) ad oggi (16.05.2018)

Catalogue pieces detachees
valable à partir du numero de Série n. 1144218 (19.01.2017) jusqu'à aujourd'hui (16.05.2018)

Ersatzteilkatalog
gültig ab Serien-Nr. 1144218 (19.01.2017) bis heute (16.05.2018)

Spare parts catalogue
valid from serial no. 1144218 (19.01.2017) up today (16.05.2018)

Catálogo de peças de reposição
válido do número de série 1144218 (19.01.2017) até hoje (16.05.2018)

Le informazioni sono considerate non vincolanti. Le immagini rappresentate sono puramente indicative. Il produttore si riserva il diritto di apportare modifiche in qualsiasi momento senza preavviso.

Les informations données ne sont pas contraignantes. Les images montrées sont à titre indicatif. Le producteur se réserve le droit d'apporter des modifications sans préavis.

Die im vorliegenden Dokument aufgeführten Informationen und Bilder sind unverbindlich. Der Hersteller behält sich das Recht vor, jederzeit ohne vorherige Ankündigung Änderungen vorzunehmen

Info and drawing could be slightly different from reality and they cannot be considered as compelling. Manufacturer can modify info anytime without forewarning.

As Informações e desenhoS podem estar um pouco diferente da realidade e são puramente indicativas. O fabricante pode modificar estas informações a qualquer momento sem aviso prévio.

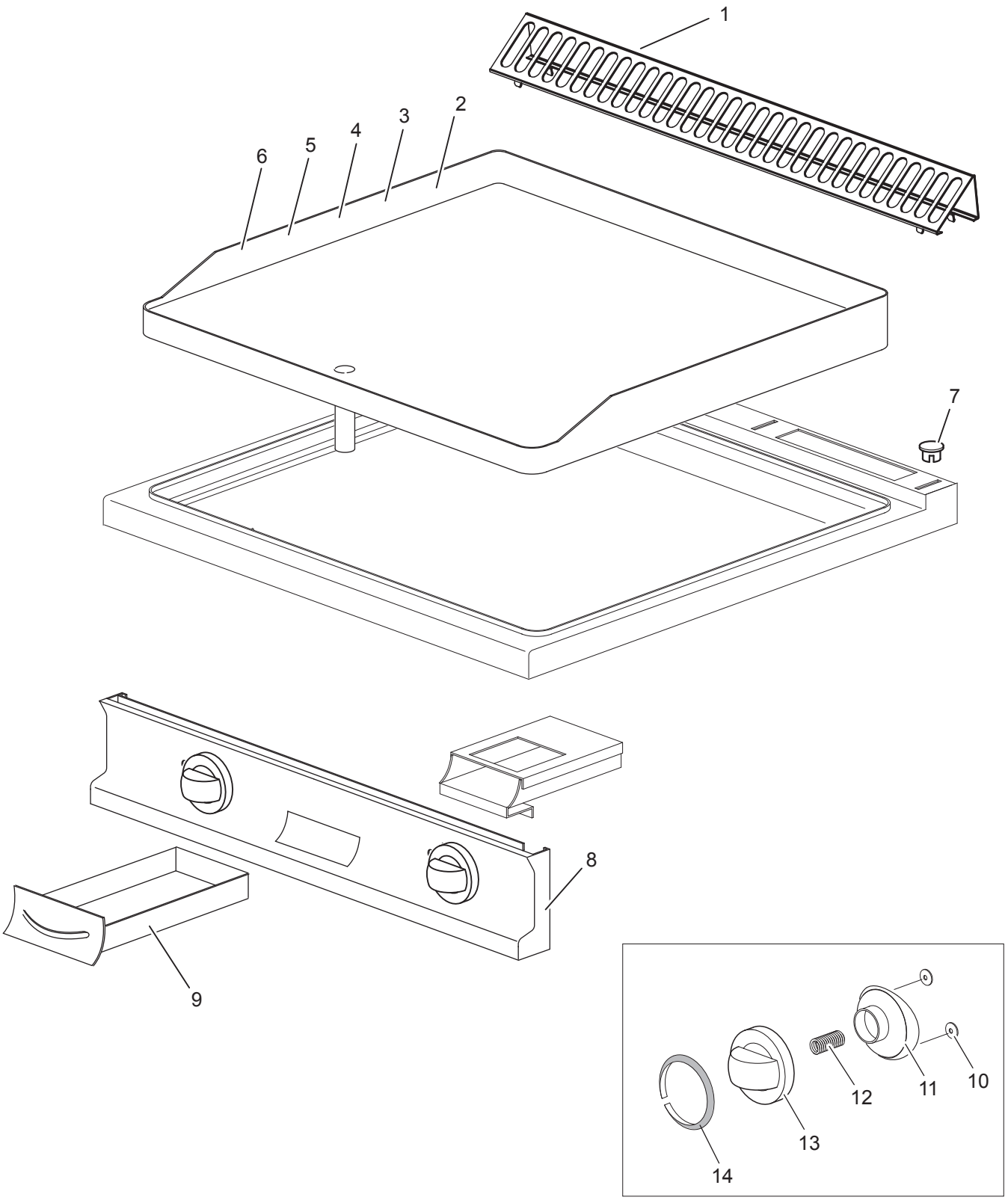
1
2
3
4
5
6
7
8
9
10
11
12
13
14

# Listino componenti per pagina 1

| | | | |
|---|---|---|---|
| 1 | 180968 | GRIGLIA CAMINO<br>GRILLE POUR CHEMINÉE<br>KAMINROST<br>CHIMNEY GRILL | |
| 2 | 181277 | PIANO COTTURA LISCIO<br>PLAN DE CUISSON LISSE<br>GLATTBRATTPLATTE<br>SMOOTH PLATE | |
| 3 | 181435 | PIANO COTTURA LISCIO CROMATO<br>PLAN DE CUISSON LISSE CHROME'<br>GLATT/VERCHROMEDBRATTPLATTE<br>SMOOTH CHROMED PLATE | |
| 4 | 181642 | PIANO COTTURA LISCIO RIGATO<br>PLAN DE CUISSON LISSE RAINURE'<br>GLATT/ GERILLTESBRATTPLATTE<br>SMOOTH RIBBED PLATE | |
| 5 | 182005 | PIANO COTTURA LISCIO RIGATO CROMATO<br>PLAN DE CUISSON LISSE RAINURE' CHROME'<br>GLATT/VERCHROMED/GERILLTBRATTPLATTE<br>SMOOTH RIBBED CHROMED PLATE | |
| 6 | 182004 | PIANO COTTURA RIGATO<br>PLAN DE CUISSON RAINURE'<br>GERILLTBRATTPLATTE<br>RIBBED PLATE | |
| 8 | 182481 | CRUSCOTTO<br>PANNEAU DE CONTROLE<br>FRONT BLENDE<br>CONTROL PANEL | |
| 9 | RIC0004757 | CASSETTO OLIO COMPLETO<br>TIROIR POUR L'HUILE COMPLET<br>KOMPLETTE OELSCHIEBER<br>OIL DRAWER COMPLETE | |
| 13 | 168878<br>*Recommended spare parts* | CORPO MANOPOLA COMMUTATORE<br>POIGNEE COMMUTATEUR<br>UMSCHALTER-KNOPFKOERPER<br>COMMUTATOR KNOB | |
| 14 | 186404<br>*Recommended spare parts* | ANELLO MANOPOLA FORNO<br>RING FOUR<br>KLEBERING KNEBEL BACKOFEN THERMOSTAT<br>OVEN RING | |

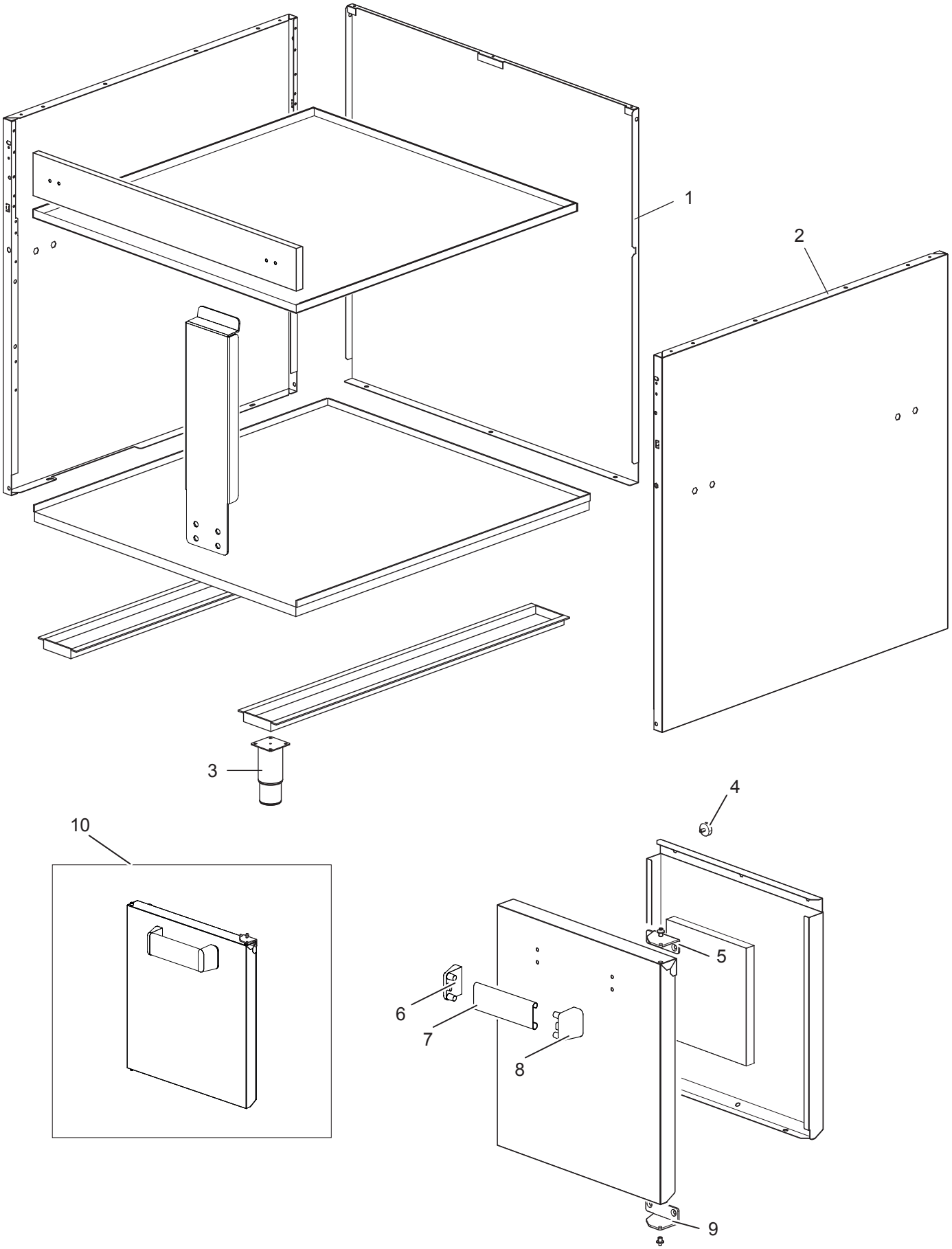
1
2
3
4
5
6
7
8
9
10

# Listino componenti per pagina 2

| | | | |
|---|---|---|---|
| 1 | 180972 | POSTERIORE<br>ARRIERE<br>RÜCKWAND<br>BACK SIDE | |
| 2 | 180969 | FIANCO<br>TOLE LATERAL<br>SEITENWAND<br>LATERAL SIDE | |
| 3 | RTCU700277 | PIEDE<br>PIED<br>FUSS<br>FOOT | |

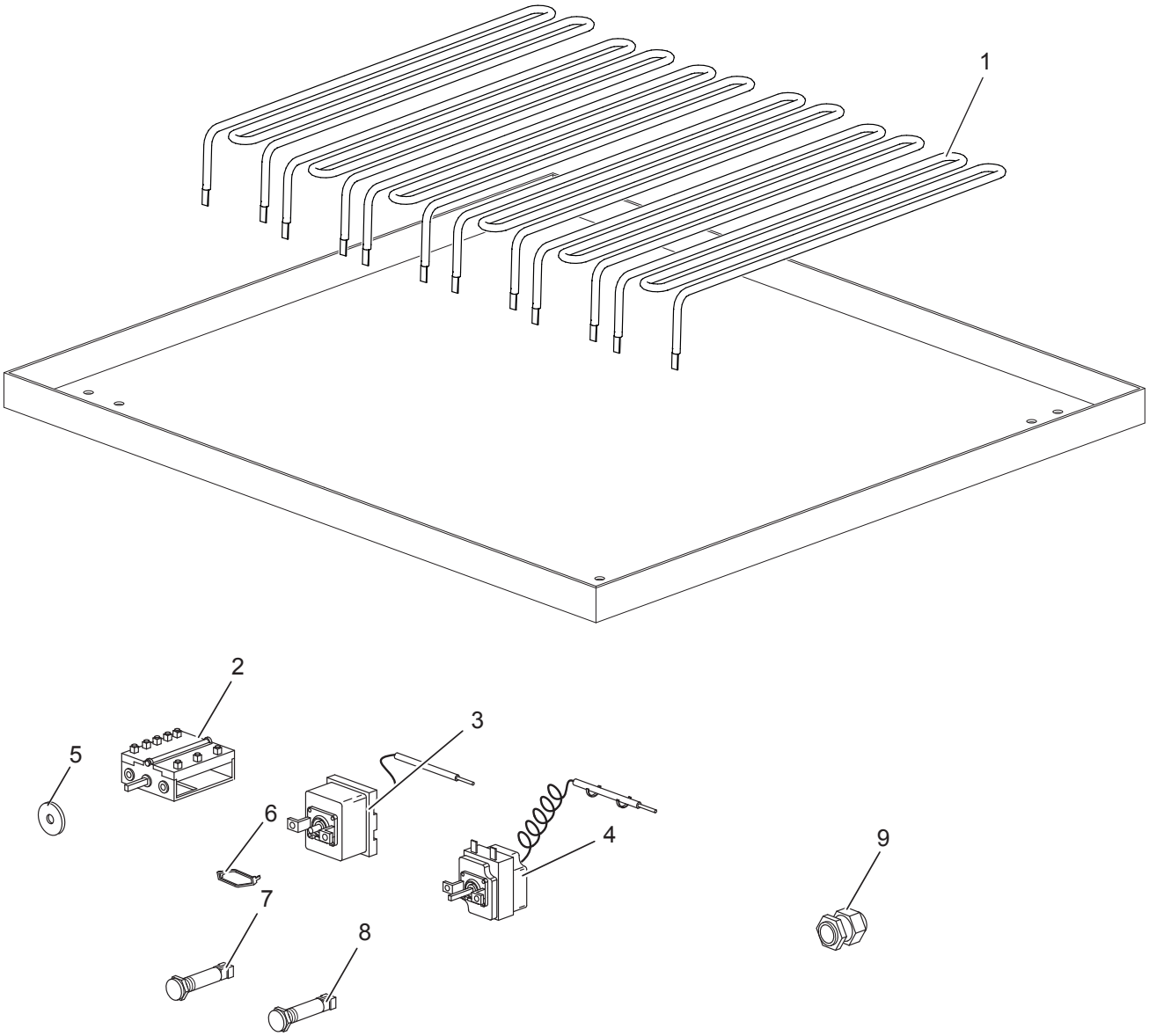
1
2
3
4
5
6
7
8
9

# Listino componenti per pagina 3

| | | | |
|---|---|---|---|
| 1 | RTBF800038<br>*Recommended spare parts* | RESISTENZA 2KW<br>RESISTANCE 2KW<br>HEIZKÖRPER 2KW<br>HEATING ELEMENT 2KW | |
| 2 | RTBF900007<br>*Recommended spare parts* | COMMUTATORE<br>COMMUTATEUR<br>TAKTSCHALTER<br>COMMUTATOR | |
| 3 | RTCU600067<br>*Recommended spare parts* | TERMOSTATO DI LAVORO<br>THERMOSTAT DE TRAVAIL<br>ARBEITSTHERMOSTAT<br>WORKING THERMOSTAT | |
| 4 | RTCU800152<br>*Recommended spare parts* | TERMOSTATO DI SICUREZZA<br>THERMOSTAT DE SECURITE<br>SICHERHEITSTHERMOSTAT<br>SAFETY THERMOSTAT | |
| 5 | RTCU800185<br>*Recommended spare parts* | GUARNIZIONE ASTA COMMUTATORE<br>JOINT POUR BARRE DU COMMUTATEUR<br>DICHTUNG WELLE TAKTSCHALTER<br>GASKET FOR COMMUTATOR ROD | |
| 6 | RTBF900037<br>*Recommended spare parts* | STAFFA BASSA COMMUTATORE/TERMOSTATO<br>CROCHET POUR COMMUTATEUR/THERMOSTAT<br>UNTERER HALTEBUEGEL UMSCHALTER/THERMOSTAT<br>LOW BRACKET COMMUTATOR/THERMOSTAT | |
| 7 | 166465<br>*Recommended spare parts* | LAMPADINA SPIA VERDE<br>LAMPE TEMOIN VERTE<br>GRUNE KONTROLLEUCHTE<br>GREEN WARNING LIGHT | |
| 8 | 166466<br>*Recommended spare parts* | LAMPADINA SPIA ARANCIONE<br>LAMPE DE SIGNALATION ORANGE<br>ORANGE KONTROLLEUCHTE<br>ORANGE LAMP LIGHT | |
| 9 | RTBF800138 | F/CAVO PG21<br>SERRE CABLE PG21<br>KABELDURCHFÜHRUNG PG21<br>CHOCK PG21<br>PRENSA CABO PG21 | |