Apach
COOK line
Viale Europa, 24 - 37045 S.PIETRO DI LEGNAGO (VR) - ITALY

EAC

SPARE PARTS CATALOGUE
ERSATZTEILKATALOG
CATALOGUE PIECES DETACHEES
CATALOGO PARTI RICAMBIO
CATALOGO DE PIEZAS DE RECAMBIO
CATALOGO PECAS, DE REPOSICAO

Catalogo parti di ricambio valido
dalla matricola 4328706 ad oggi (07/07/2020)

Catalogue pieces detachees
du numero de Série n. 4328706 jusqu'à aujourd'hui (07/07/2020)

Ersatzteilkatalog
gültig ab Serien-Nr. 4328706 bis heute (07/07/2020)

Spare parts catalogue
valid from serial no. 4328706 up today (07/07/2020)

Catálogo de peças de reposição
válido do número de série 4328706 até hoje (07/07/2020)

AK902

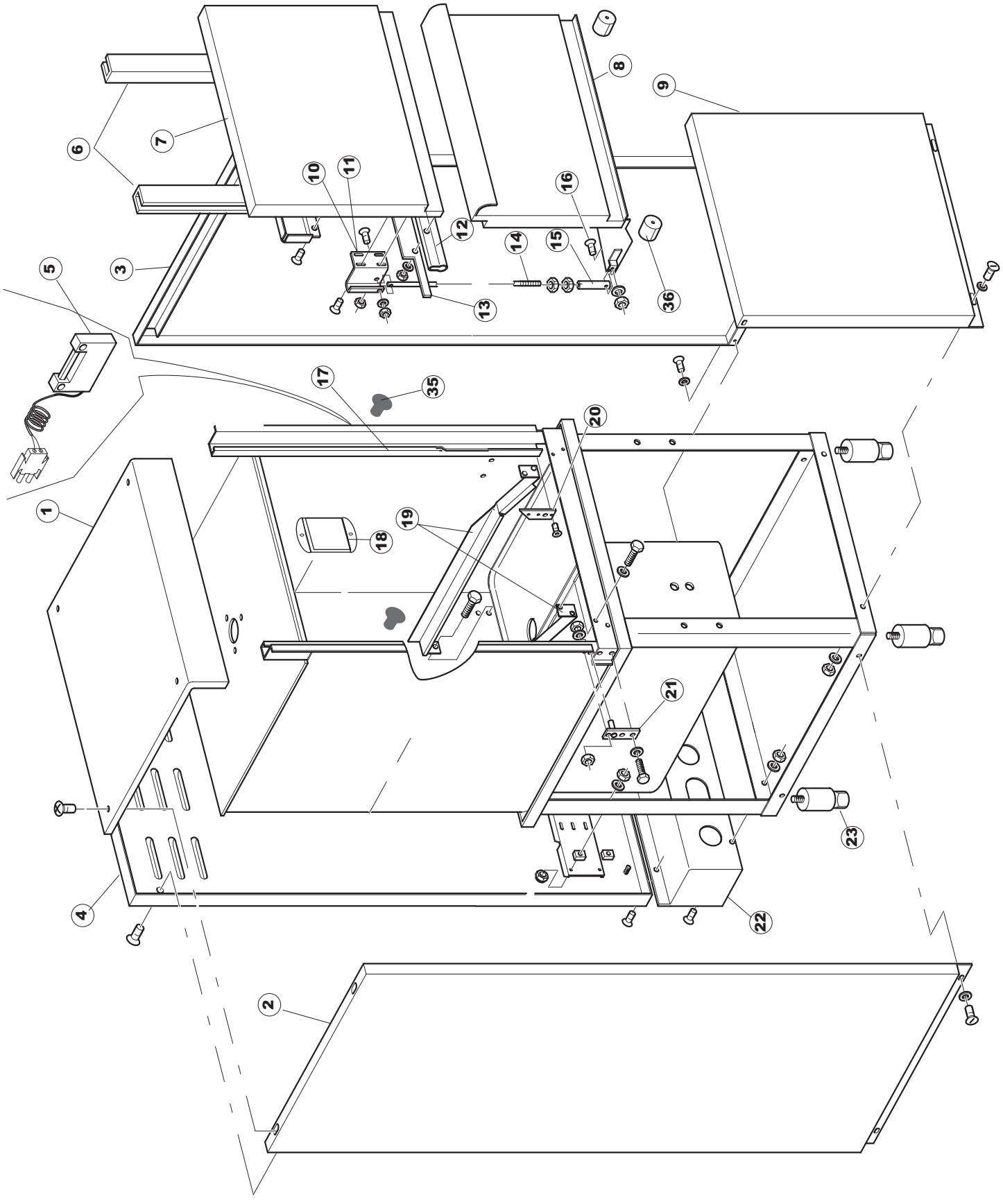
1
2
3
4
5
6
7
8
9
10
11
12
13
14
15
16
17
18
19
20
21
22
23
35
36

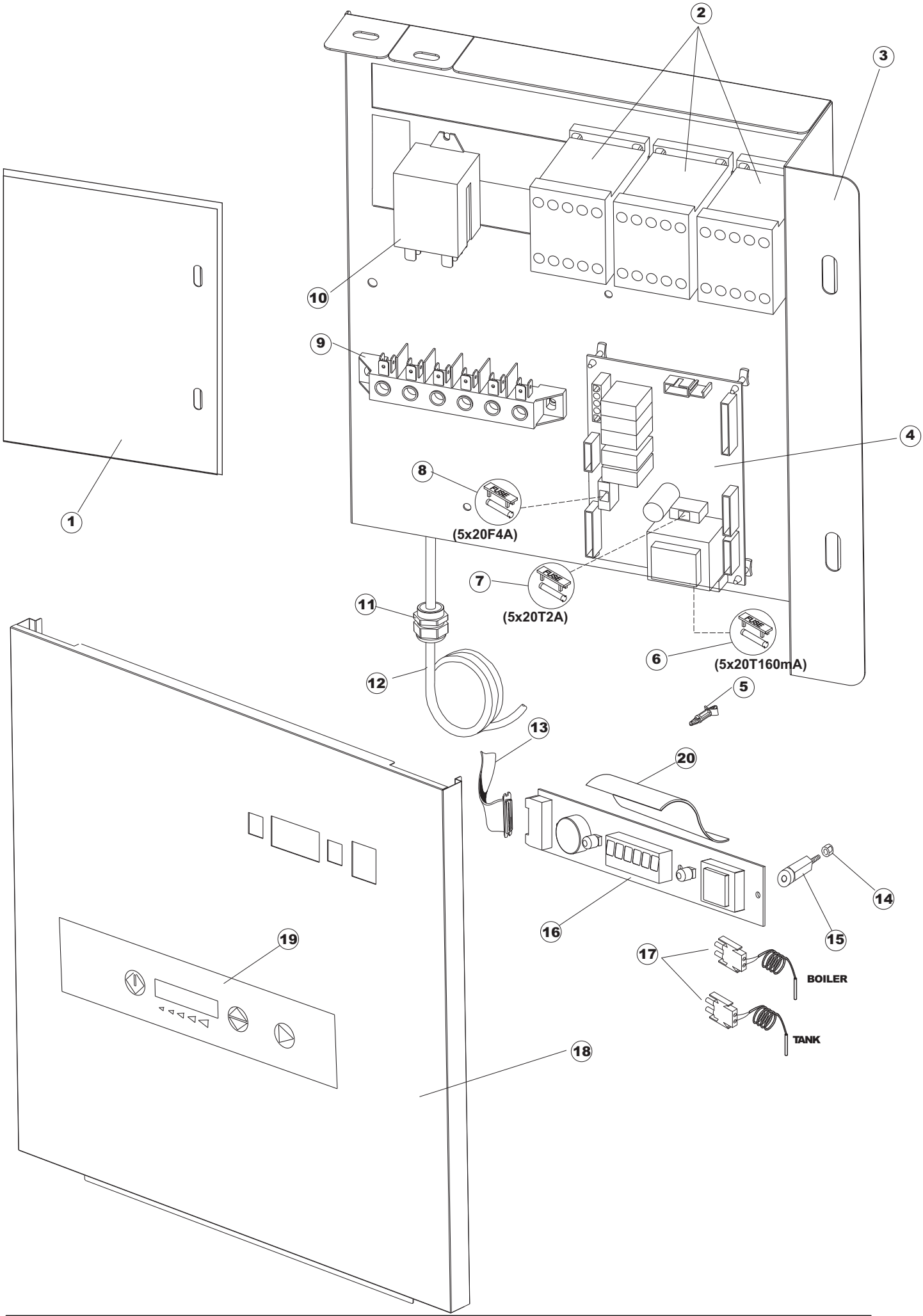
1
2
3
4
5
6
(5x20T160mA)
7
(5x20T2A)
8
(5x20F4A)
9
10
11
12
13
14
15
16
17
BOILER
TANK
18
19
20

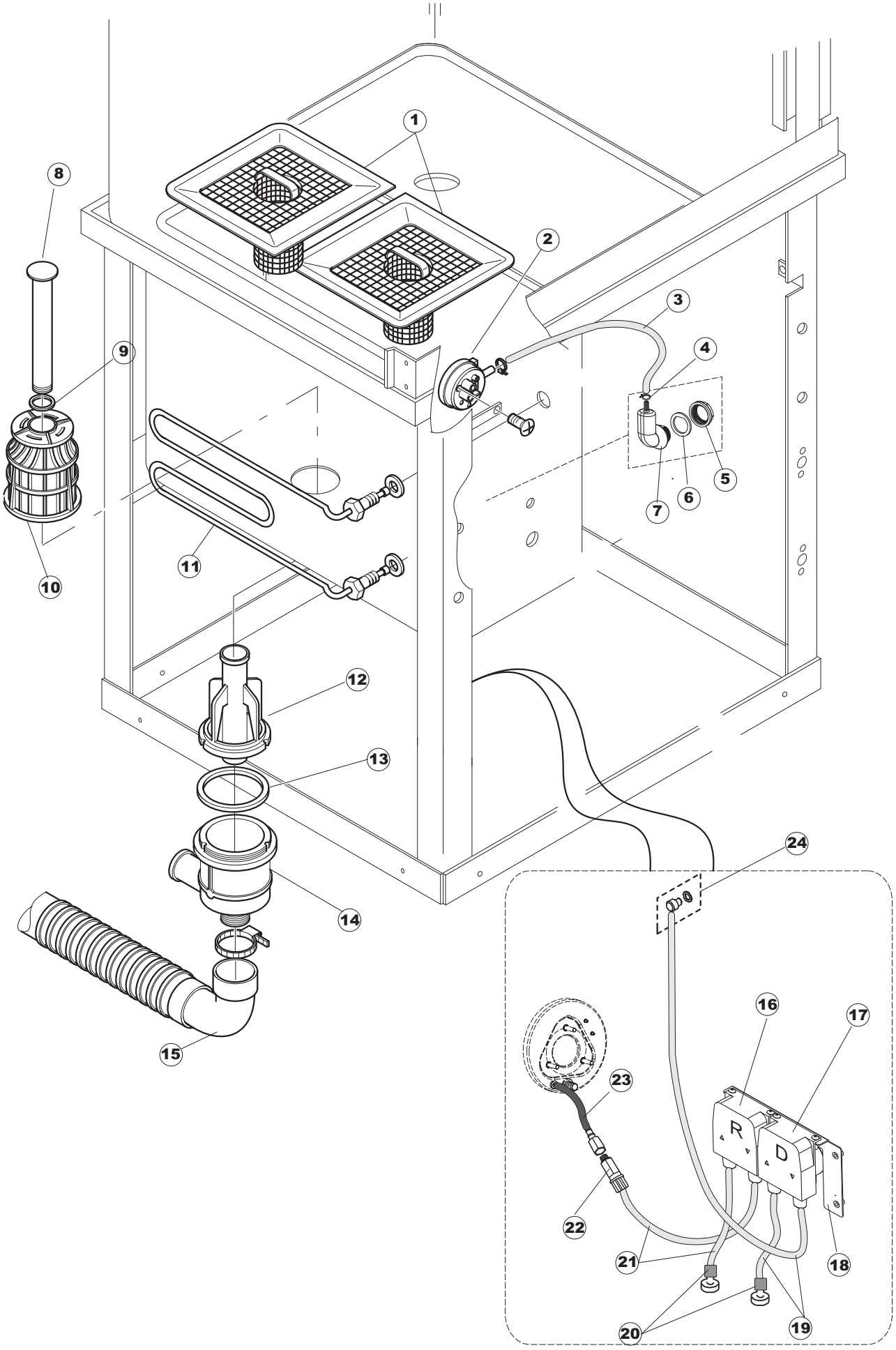
1
2
3
4
5
6
7
8
9
10
11
12
13
14
15
16
17
18
19
20
21
22
23
24
R
D

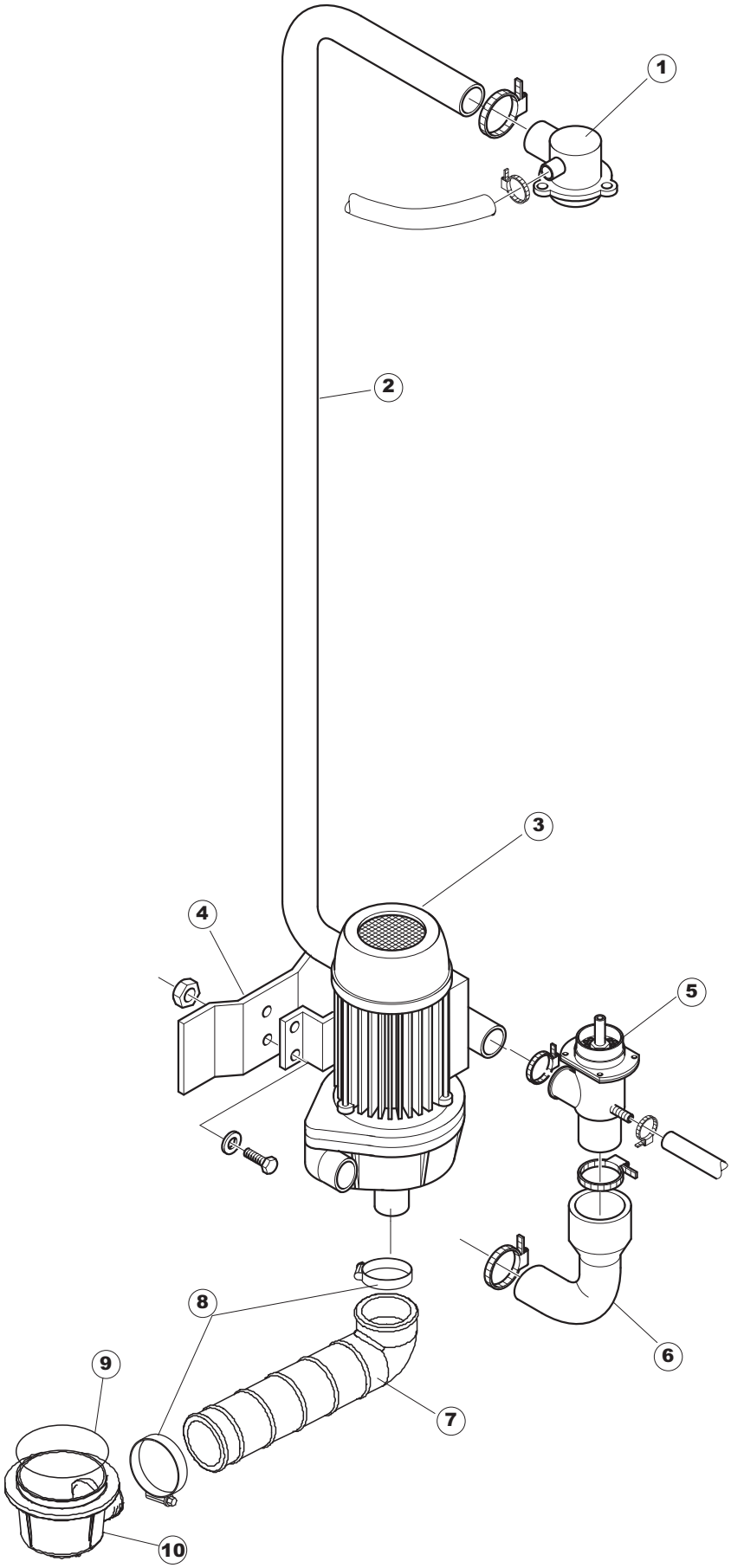
1
2
3
4
5
6
7
8
9
10

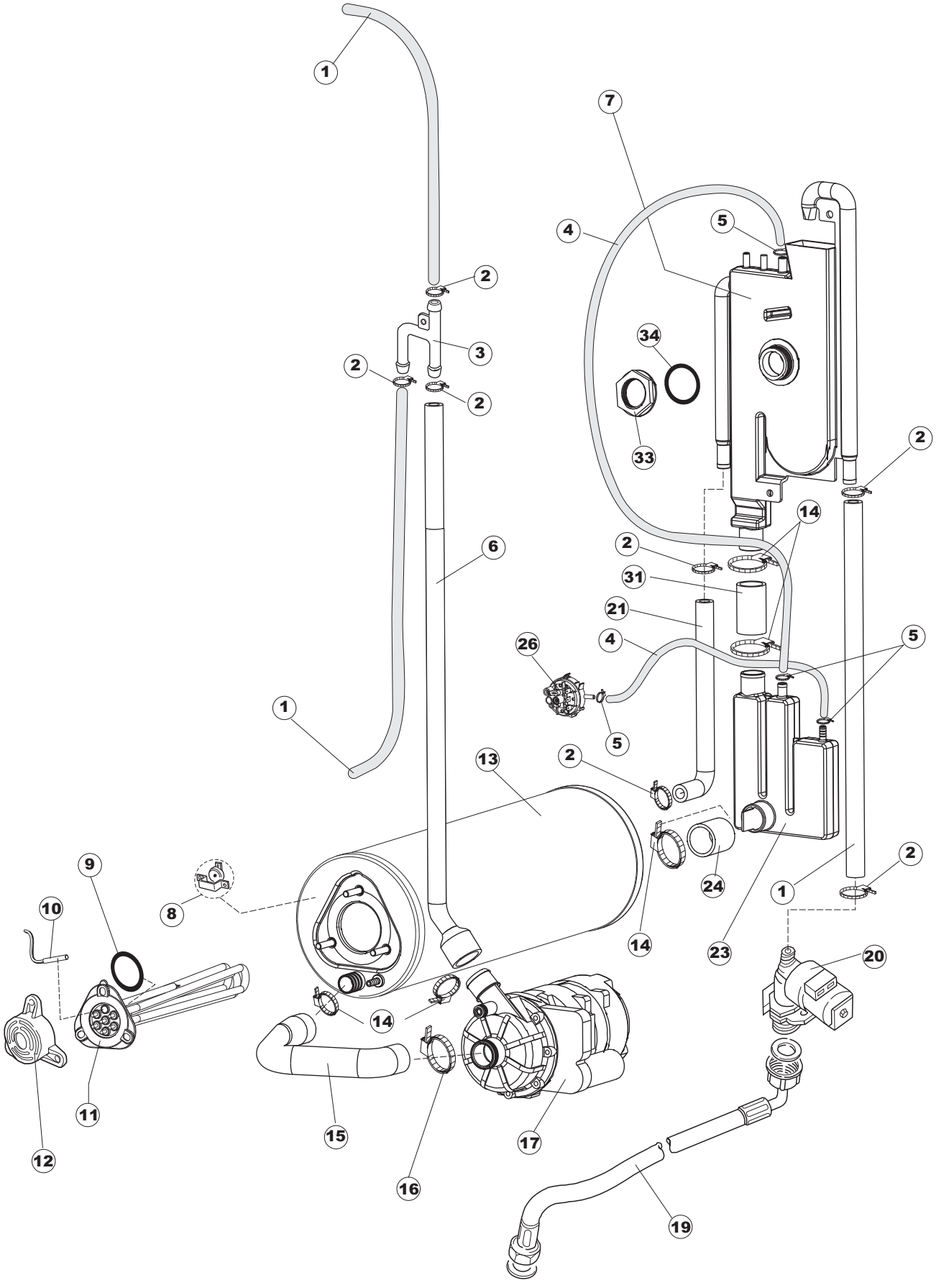
1
7
4
5
2
3
34
2
2
33
2
14
6
2
31
21
26
4
5
1
5
13
2
9
8
24
1
2
10
14
23
20
14
11
15
17
12
16
19

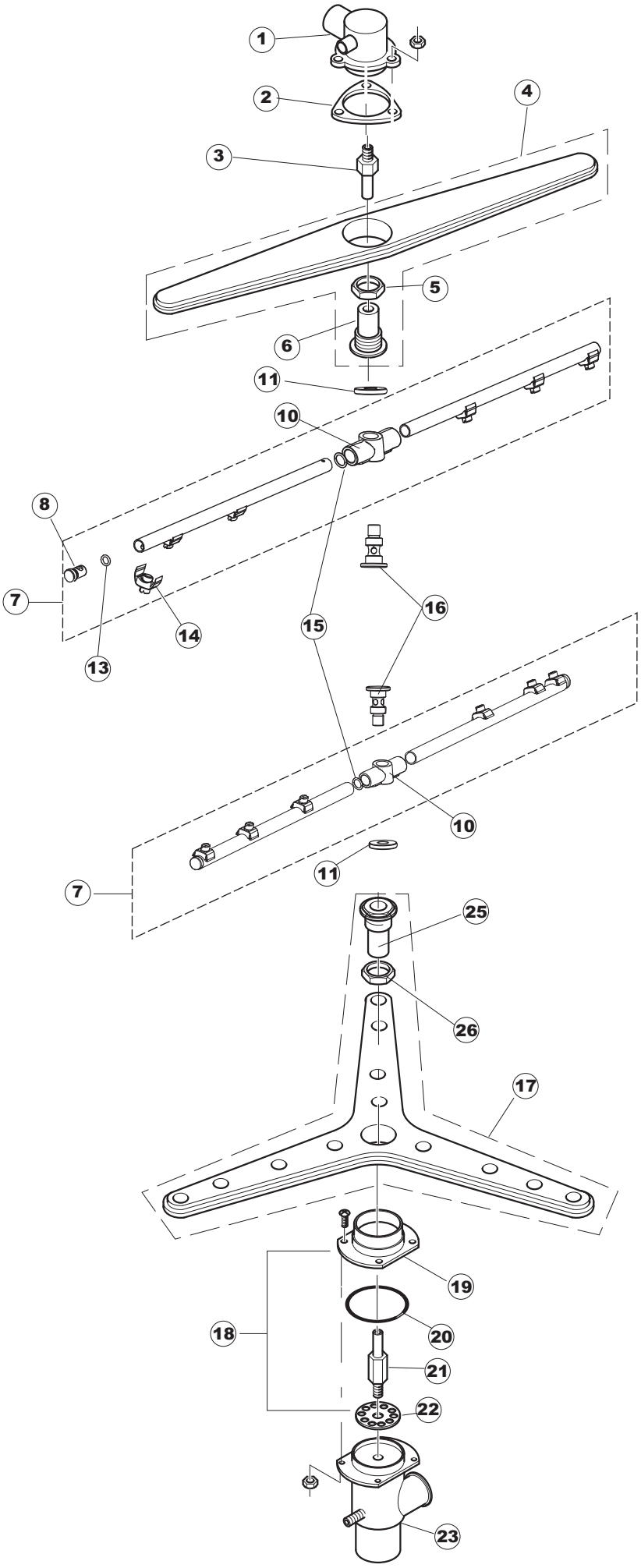
1
2
4
3
5
6
11
10
8
7
16
15
14
13
10
11
7
25
26
17
19
18
20
21
22
23

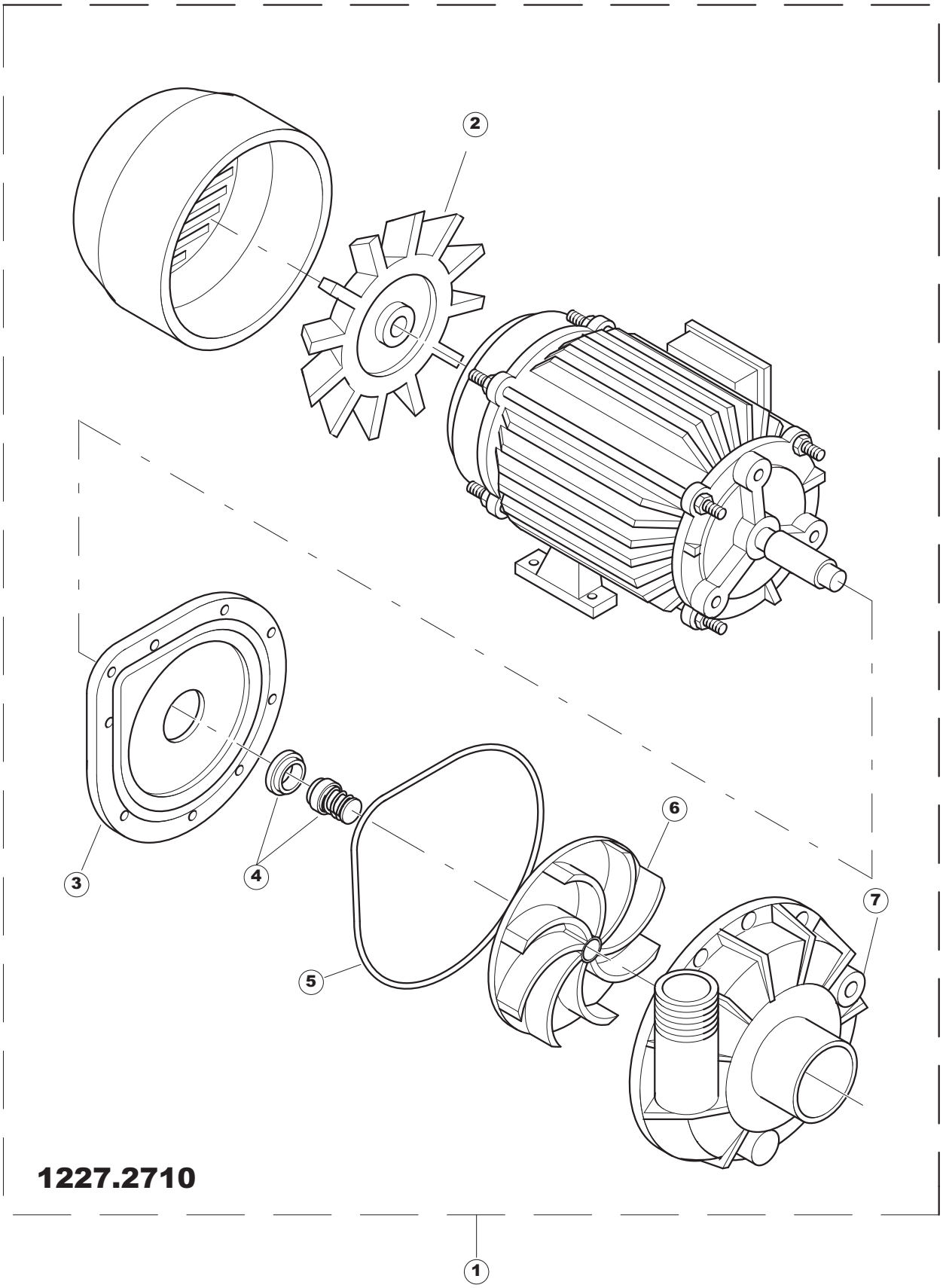
2
3
4
5
6
7
1
1227.2710

TT922RU POT AND PAN WASHER MOD AK902

(*) Recommended spare part.

Page	Spare part position	Spare part code no.	Old code number	Description	U.m.
1	1	41118	C.41118	TOP PANEL	NR
1	2	44810		LEFT SIDE PANEL	NR
1	3	44814		RIGHT SIDE PANEL	NR
1	4	44122	C.44122	BACK PANEL	NR
1	5	80871		MAGNETIC DOOR SWITCH	NR
1	6	44265		DOOR SLIDING GUIDE - UPPER	NR
1	7	K44360		KIT UPPER DOOR	NR
1	8	44550		LOWER DOOR	NR
1	9	41326		FRONT PANEL	NR
1	10	4108701	C.4108701	DOOR BRACKET	NR
1	11	4108801	C.4108801	SUPPORT BRACKET	NR
1	12	41583		DOOR GASKET	NR
1	13	41582		DOOR PACKING SUPPORT - UPPER	NR
1	14	44593		DOOR LEVER	NR
1	15	41095	C.41095	UPPER BUSH FOR DOOR TIE FOR POT AND PAN WASHERS	NR
1	16	486078	CVI173	STAINLESS STEEL SCREW 6MAX30 T.1/2 TC	NR
1	17	929199	CWP25	FOOT TYPE 30191.1.2 (BLACK)	NR
1	18	43527		GUARD	NR
1	19	41539		RACK SLIDE	NR
1	20	4113501	C.4113501	DOOR SIDE THICKNESS - DX/SX	NR
1	21	4114501	C.4114501	SMALL PLATE FOR DOOR PIN	NR
1	22	41622		BACK PANEL	NR
1	23	927006	DWP127	FOOT	NR
1	35	929199	CWP25	FOOT TYPE 30191.1.2 (BLACK)	NR
1	36	41100		DOOR BEATING POINT BUFFER	NR
2	1	41416		COVER	NR
2	2	73350		CONTACTOR	NR
2	3	41415		WIRING PANEL	NR
2	4	215032-1		MAIN BOARD	NR
2	5	CWP2		FOOT	NR
2	6	228012		FUSE	NR
2	7	228011		FUSE	NR

TT922RU POT AND PAN WASHER MOD AK902

(*) Recommended spare part.

Page	Spare part position	Spare part code no.	Old code number	Description	U.m.
2	8	228004		FUSE	NR
2	9	220011	REB220011	TERMINAL BLOCK	NR
2	10	929115	DER1108	RELAY 16A 230V	NR
2	11	DEP521		CABLE GLAND	NR
2	12	69803		POWER CABLE	NR
2	13	80934		FLAT CABLE	NR
2	14	417119		NUT	NR
2	15	419036		INTERFACE BOARD DISTANCE KEEPERS	NR
2	16	227083		PUSH BUTTONS BOARD	NR
2	17	231016		TEMPERATURE PROBE	NR
2	18	41326		FRONT PANEL	NR
2	19	41745		NOT IN PRICE-LIST	
2	20	69810		CURTAIN	NR
3	1	41257		STAINER	NR
3	2	926049	DEP45	PRESSURE SWITCH	NR
3	3	143253		PIPE	MT
3	4	CFF10073		CABLE TIE	NR
3	5	417120		NUT	NR
3	6	437098		GASKET	NR
3	7	70600		AIR TRAP FOR PRESSURE SWITCH	NR
3	8	80250	C.80250	OVERFLOW PIPE	NR
3	9	CGR4131NT		O-RING	NR
3	10	121081	REB121081	STAINER	NR
3	11	70562		HEATING ELEMENT	NR
3	12	80470		RING NUT	NR
3	13	456040	REB456040	O-RING	NR
3	14	136020	REB136020	ASPIRATION AND DRAIN BODY	NR
3	15	143136	REB143136	DRAIN HOSE	NR
3	16	209036		RINSE AID-DISPENSER	NR
3	17	209043		DETERGENT DOSING PUMP	NR
3	18	80675		SUPPORT BRACKET	NR
3	19	143194	REB143194	PIPE	MT

TT922RU POT AND PAN WASHER MOD AK902

(*) Recommended spare part.

Page	Spare part position	Spare part code no.	Old code number	Description	U.m.
3	20	121993		FILTER AID DISPENSER	NR
3	21	H.775601		PIPE	MT
3	22	468200		PIPE FITTING	NR
3	23	143005	SPG10	LINEN RUBBER PIPE 5X12 - BLACK	MT
3	24	999348		DETERGENT TANK FITTING	NR
4	1	35604		UPPER MAIN MANIFOLD	NR
4	2	44354		PIPE	NR
4	3	41990		WASHPUMP	NR
4	4	41626		SUPPORT BRACKET	NR
4	5	4206301	C.4206301	LOWER MANIFOLD	NR
4	6	41560		DELIVERY WASH HOSE	NR
4	7	80186	C.80186	SUCTION PIPE	NR
4	8	CFS3		CLAMP, HOSE-TYPE TORRO W2B 60-80/12	NR
4	9	456040	REB456040	O-RING	NR
4	10	136020	REB136020	ASPIRATION AND DRAIN BODY	NR
5	1	143010	SPG61	RUBBER PIPE 12X19,5	MT
5	2	927322	CFS14	HOSE CLAMP	NR
5	3	143268		JUNCTION "Y"	NR
5	4	H.165168		PIPE	MT
5	5	423026		CABLE TIE	NR
5	6	41525		RINSE DELIVERY TUBE(CRP)	NR
5	7	144021		BREAK TANK	NR
5	8	926189	DRT140	CONTACT SAFETY-THERMOSTAT	NR
5	9	456002	REB456002	O-RING	NR
5	10	231016		TEMPERATURE PROBE	NR
5	11	230083C	REB230083C	HEATING ELEMENT 6KW	NR
5	12	69870		BOILER HEATING ELEMENT PROTECTION	NR
5	13	104061		BOILER	NR
5	14	CFS18		HOSE CLAMP	NR
5	15	69068		PIPE	NR
5	16	423008	CFS24	HOSE CLAMP	NR
5	17	80627		RINSE PUMP 50 HZ	NR

TT922RU POT AND PAN WASHER MOD AK902

(*) Recommended spare part.

Page	Spare part position	Spare part code no.	Old code number	Description	U.m.
5	19	929169	RAT32	THERMOPLASTIC INLET HOSE	NR
5	20	240018		SOLENOID VALVE	NR
5	21	143004	REB143004	PIPE	MT
5	23	144032		LOADING SYSTEM BOILER CRP WITH BELL PRESSURE SWITCH	NR
5	24	127095		BOILER PIPE	NR
5	26	224002	REB224002	PRESSURE SWITCH TYPE 110-60	NR
5	31	929171	SPG2230	RUBBER PIPE 20X29	MT
5	33	417125		NUT	NR
5	34	437104		GASKET	NR
6	1	35604		UPPER MAIN MANIFOLD	NR
6	2	437064	REB437064	GASKET	NR
6	3	80282	C.80282	PIVOT	NR
6	4	80311	C.80311	COMPLETE WASH ARM	NR
6	5	80314	C.80314	RING NUT	NR
6	6	80310		GREY WASH ARM HOLDER (RAL 7001)	NR
6	7	41677		COMPLETE RINSE ARM	NR
6	8	926132		PLASTIC RINSE ARM CAP	NR
6	10	69632		BODY ARM	NR
6	11	K80679		RING NUT M12 WITH TEFLON WASHER	NR
6	13	456030		O-RING	NR
6	14	140036		RINSE JET	NR
6	15	456019	REB456019	O-RING	NR
6	16	80644		PIVOT	NR
6	17	929195		COMPLETE WASH ARM	NR
6	18	41064CP	C.41064CP	SUPPORT COUNTER-FLANG OF WASH ARM OF POT AND PAN WASHER	NR
6	19	41064	C.41064	SUPPORT COUNTER-FLANGE OF WASH ARM OF PO T AND PAN WASHER	NR
6	20	926252	CGR4275	O-RING	NR
6	21	42053	C.42053	PIVOT	NR
6	22	41185	C.41185	REDUCER FOR POT AND PAN WASHER	NR
6	23	4206301	C.4206301	LOWER MANIFOLD	NR
6	25	926129	DAS258	SUPPORT/HUB FOR WASH-ARM - DISHWASHERS	NR
6	26	80314	C.80314	RING NUT	NR

TT922RU POT AND PAN WASHER MOD AK902

(*) Recommended spare part.

Page	Spare part position	Spare part code no.	Old code number	Description	U.m.
7	1	41990		WASHPUMP	NR
7	2	335003	REB335003	WASHPUMP FUN	NR
7	3	315002		NOT IN PRICE-LIST	
7	4	141002	REB141002	WASH PUMP SHAFT SEAL FOR GLASSWASHER	NR
7	5	456023		O-RING	NR
7	6	41991		ELECTROPUMP IMPELLER	NR
7	7	116002		NOT IN PRICE-LIST	