ITEM NO.	PART NUMBER	DESCRIPTION
1	2300386	LID OUTER S/S ECOBOILER
2	1700067	INSULATION LID ECOBOILER
3	1401279	NUT M6 S/S WING
4	2300384	INNER LID ECOBOILER
5	1800720	KNOB LID BLACK 15mm
6	1800306	GASKET INNER ECOBOILER
7	1800307	GASKET OUTER ECOBOILER
8	1801426	FASCIA FRONT S/S TOP ECOBOILER 10L
9	1801427	FASCIA PLASTIC MIDDLE ECOBOILER
10	1801428	FASCIA FRONT S/S BOTTOM ECOBOILER
11	1501217	PUSH BUTTON METAL 230V 2 POLE
12	1800370	GROMMET PVC 25 X 1.6 X 21mm
13	2300271	DRIP TRAY COMPLETE
14	2200706	Surround 10L Ecoboiler

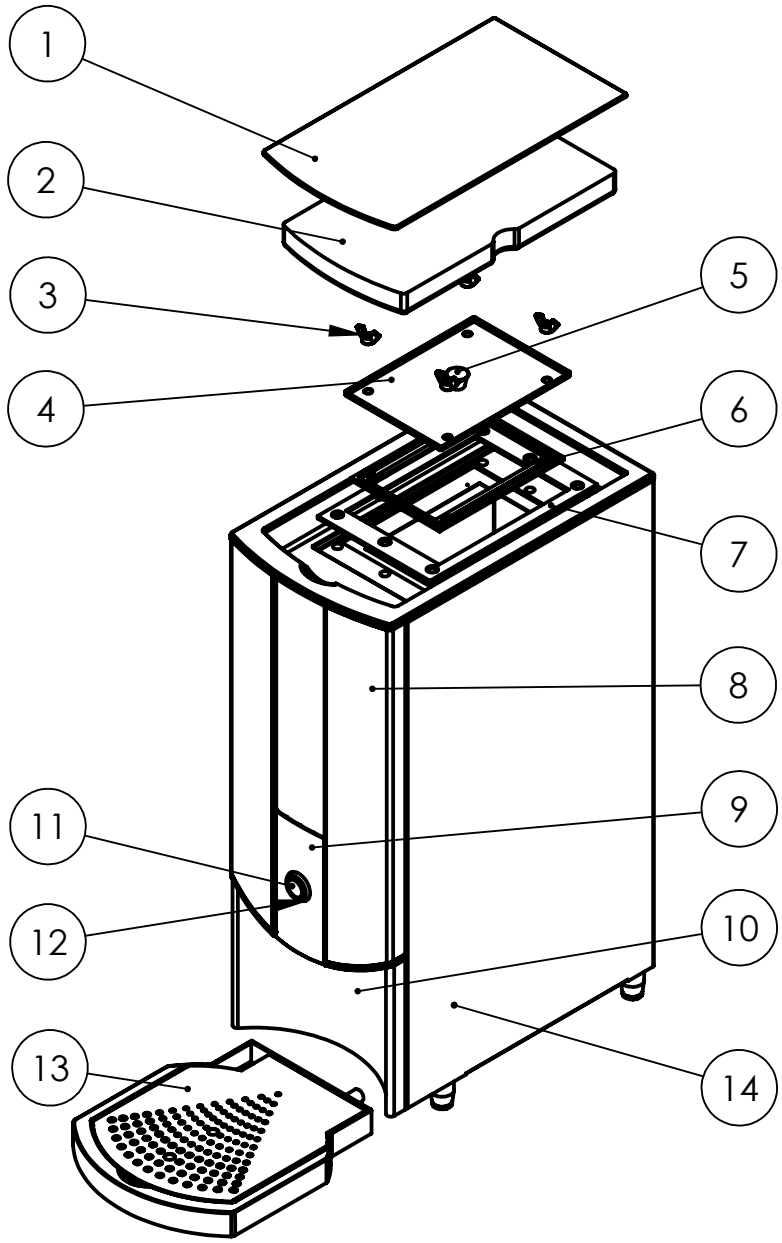

DESCRIPTION:	EXPLODED EXTERNAL	MACHINE NAME:	ECO BOILER PB10	DATE	02-09-14	UNLESS OTHERWISE SPECIFIED: DIMENSIONS ARE IN MILLIMETERS TOLERANCES: LINEAR: +/-0.2mm	SCALE:1:7
		MACHINE NUMBER:	1000666	REVISION	C		

ITEM NO.	PART NUMBER	DESCRIPTION
1	1600349	PCB ECOBOILER DISPLAY 10L
2	1402146	CLIP LATCH SELF MOUNT
3	1402147	LATCH STUD M5 MALE
4	1502156	VALVE DISPENSE SOLENOID MULLER
5	1502087	THERMAL SWITCH 130 DEG
6	1600345	ECO MAIN PCB
7	1600691	THERMISTOR ASSEMBLY
8	1801230	PILLAR SUPPORT PCB

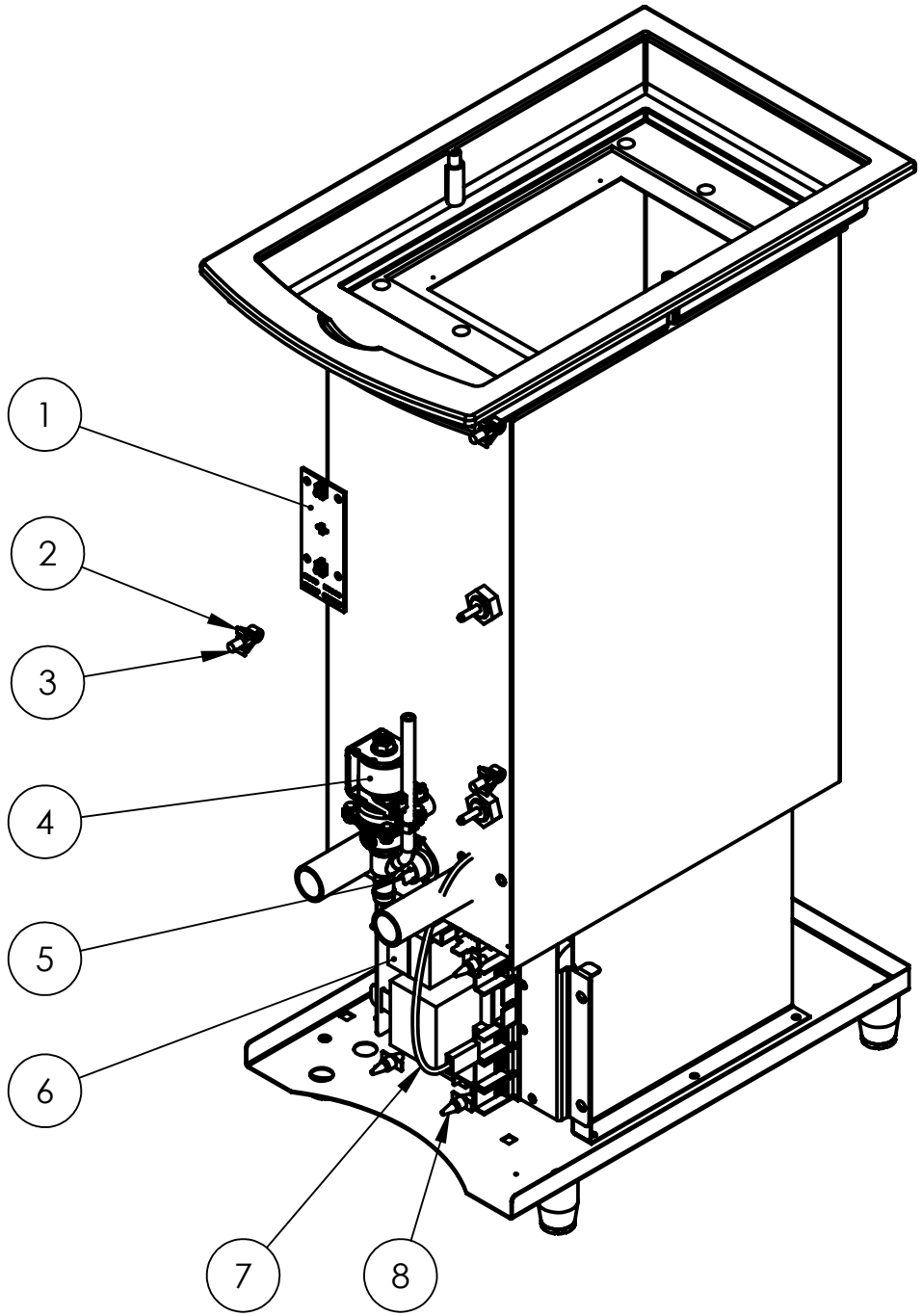

DESCRIPTION:	EXPLODED INTERNAL	MACHINE NAME:	ECO BOILER PB10	DATE	14/07/08	UNLESS OTHERWISE SPECIFIED: DIMENSIONS ARE IN MILLIMETERS TOLERANCES: LINEAR: +/-0.2mm	SCALE:1:4
		MACHINE NUMBER:	1000666	REVISION	A		

ITEM NO.	PART NUMBER	DESCRIPTION
1	2301463	PROBE COMPLETE ASSEMBLY 40mm
2	1500985	ELEMENT 2.8kW 230V
3	1502190	VALVE INLET SOLENOID 240V 3/4"
4	1800690	WATER INLET HOSE WHITE

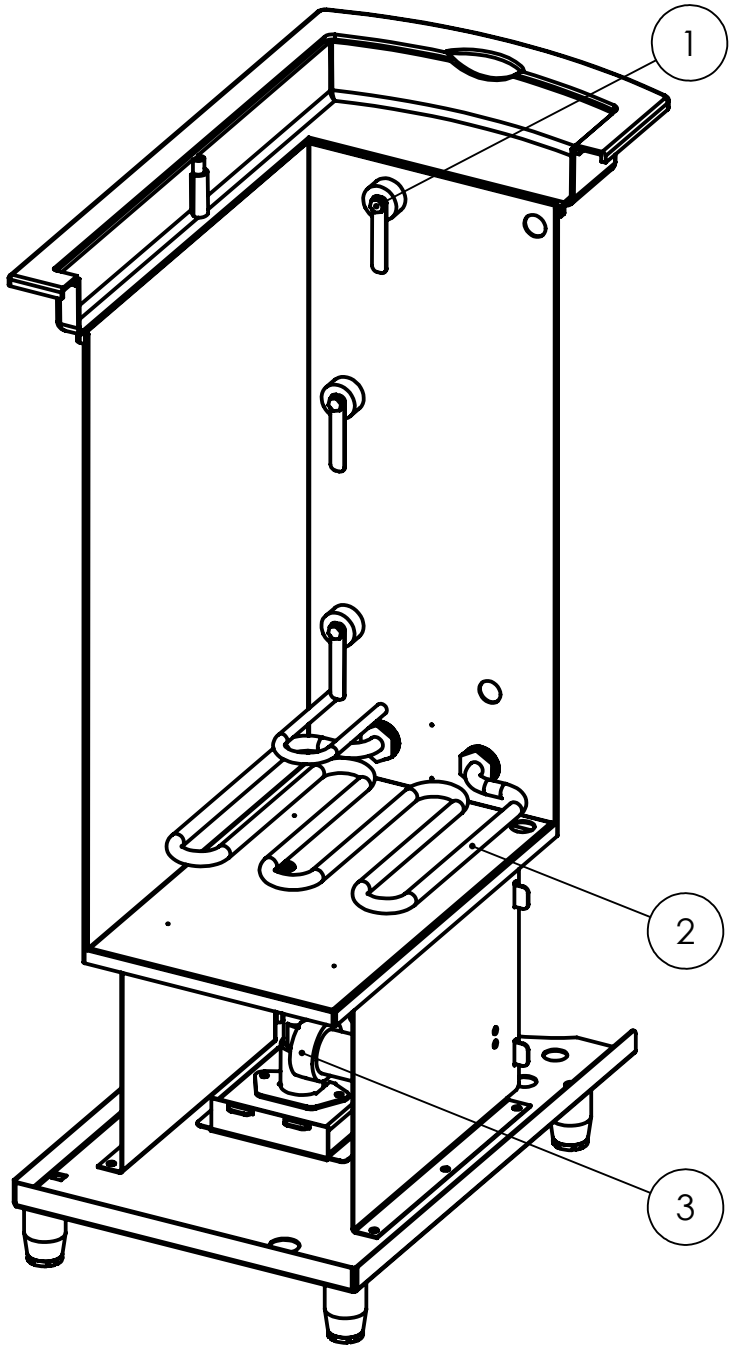

DESCRIPTION:	INTERNAL CUTAWAY	MACHINE NAME:	ECO BOILER PB10	DATE	14/07/08	UNLESS OTHERWISE SPECIFIED: DIMENSIONS ARE IN MILLIMETERS TOLERANCES: LINEAR: +/-0.2mm
		MACHINE NUMBER:	1000666	REVISION	A	SCALE:1:4