Hose lenght in meters	5 m
Maximum Working pressure	maximum 20 bar Air - maximum 10 bar Water
Maximum Working temperature	maximum 25°C Air - maximum 70°C Water
Weight	3,2 Kg
Can be used to transfer	Air-Water

SHOWER :
Working temperature : maximum 85°C
Working pressure : maximum 6 Bar

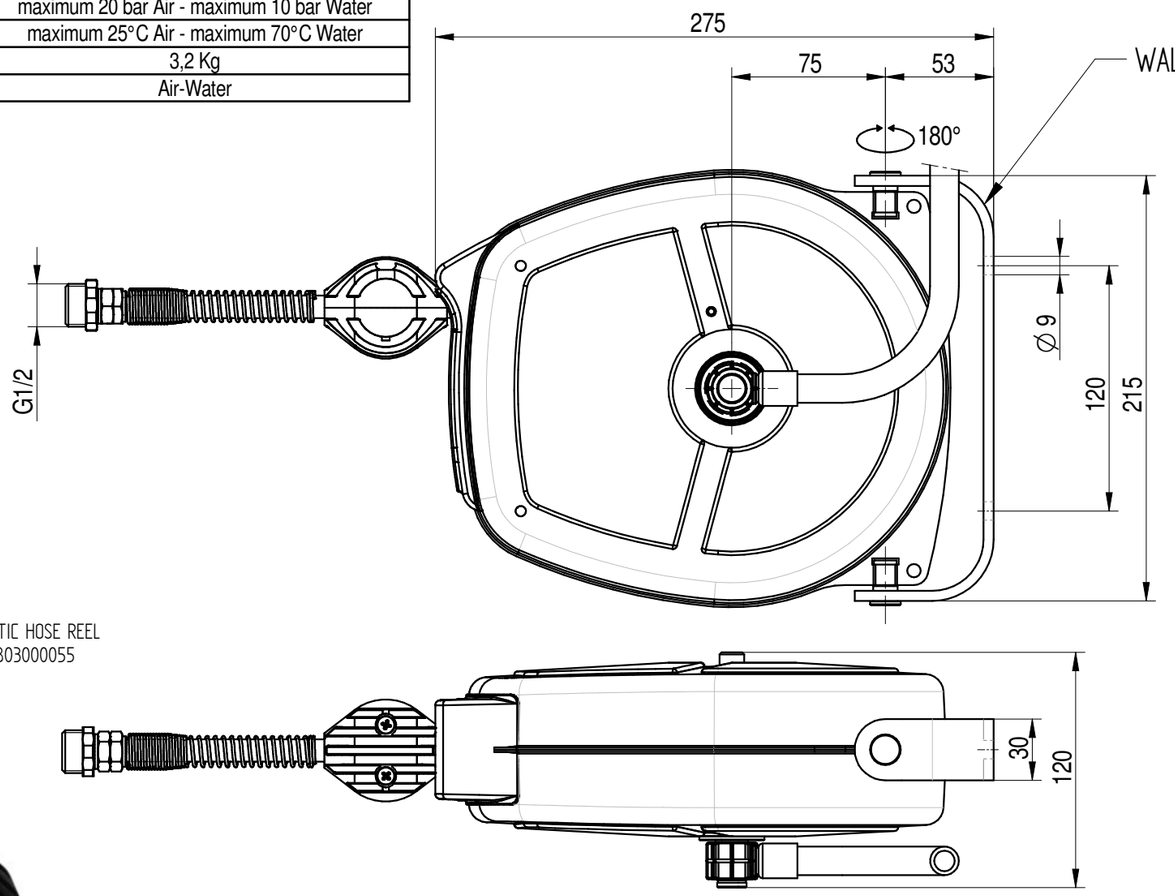

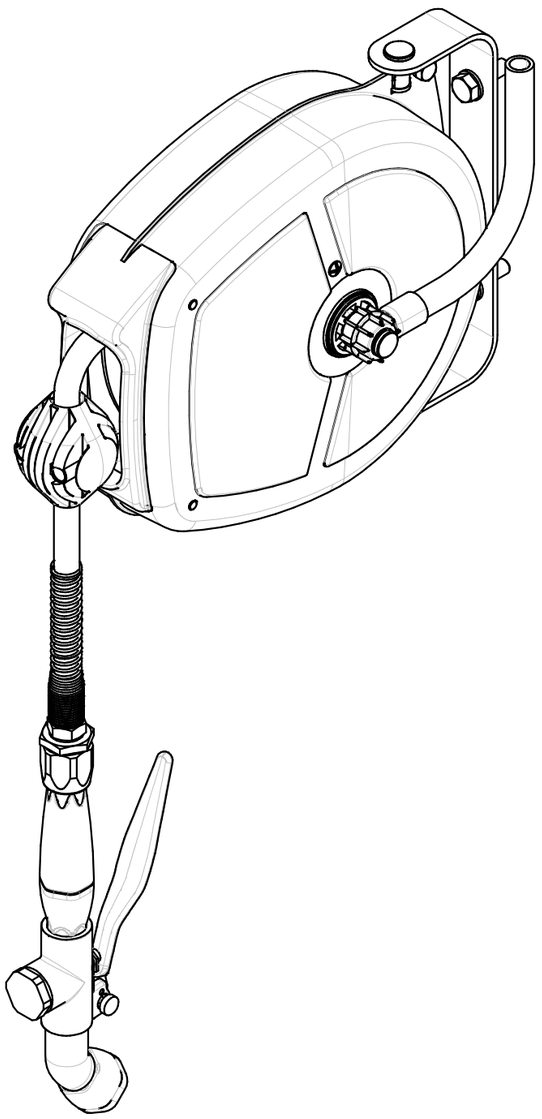

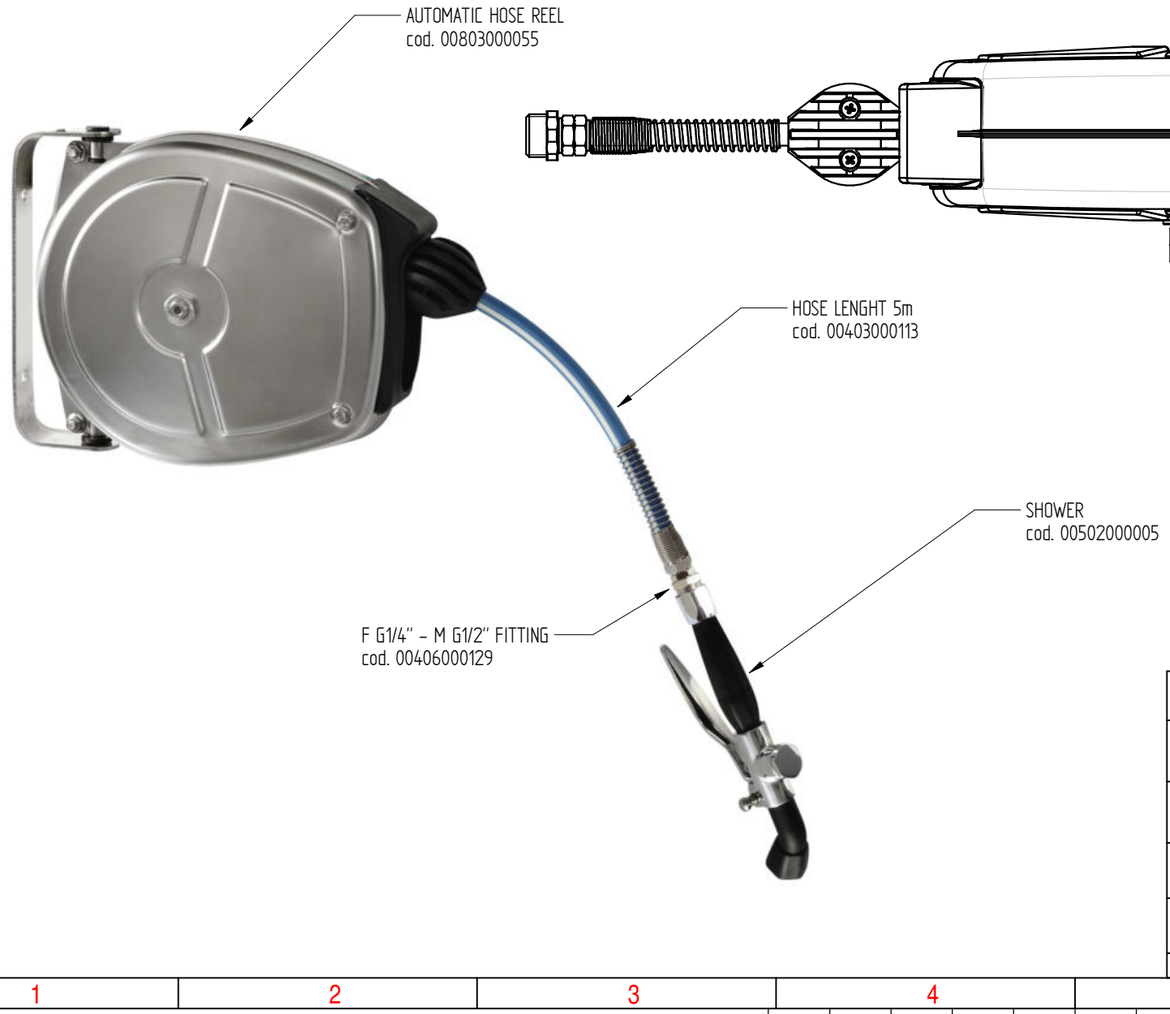

Shares without tolerance according to standard **UNI-EN-22768-1-m**		DESCRIPTION: WALL MOUNTED COVERED HOSE REEL L=5m AND SHOWER	CODE: SR000000017A
SIZE: A3	European Projection		WEIGHT: 3,2 Kg
DATE: 05-11-2018	SCALE: 1:3		
DRAWN: PICCOLO M.			
VALIDATE: PICCOLO M.			

MONOLITH
DESIGN AND TECHNOLOGICAL RESEARCH FOR WATER
VIA DELL'ARTIGIANO 8/F-8-G , 31050 MONASTIER di TREVISO (TV) tel: 0422 842157 - fax: 0422 708978

DONE WITH DESIGN CAD - PROHIBITED THE CHANGES MANUAL

Rev. 00