

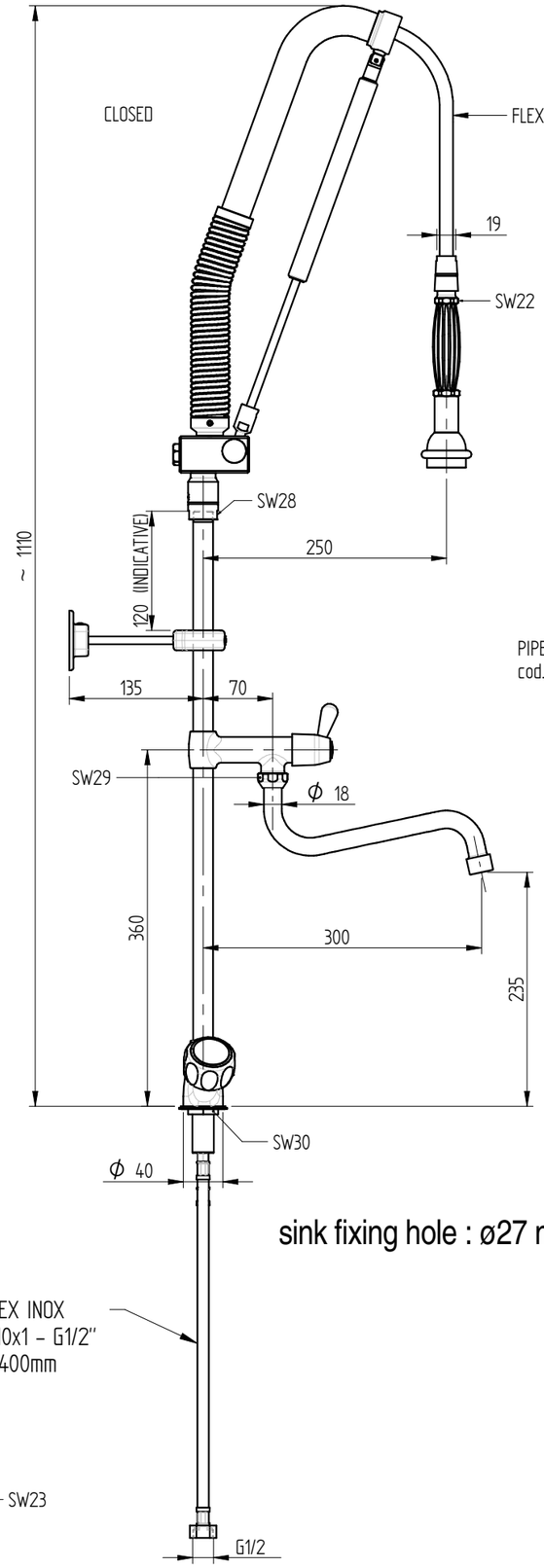

sink fixing hole : ø27 mm

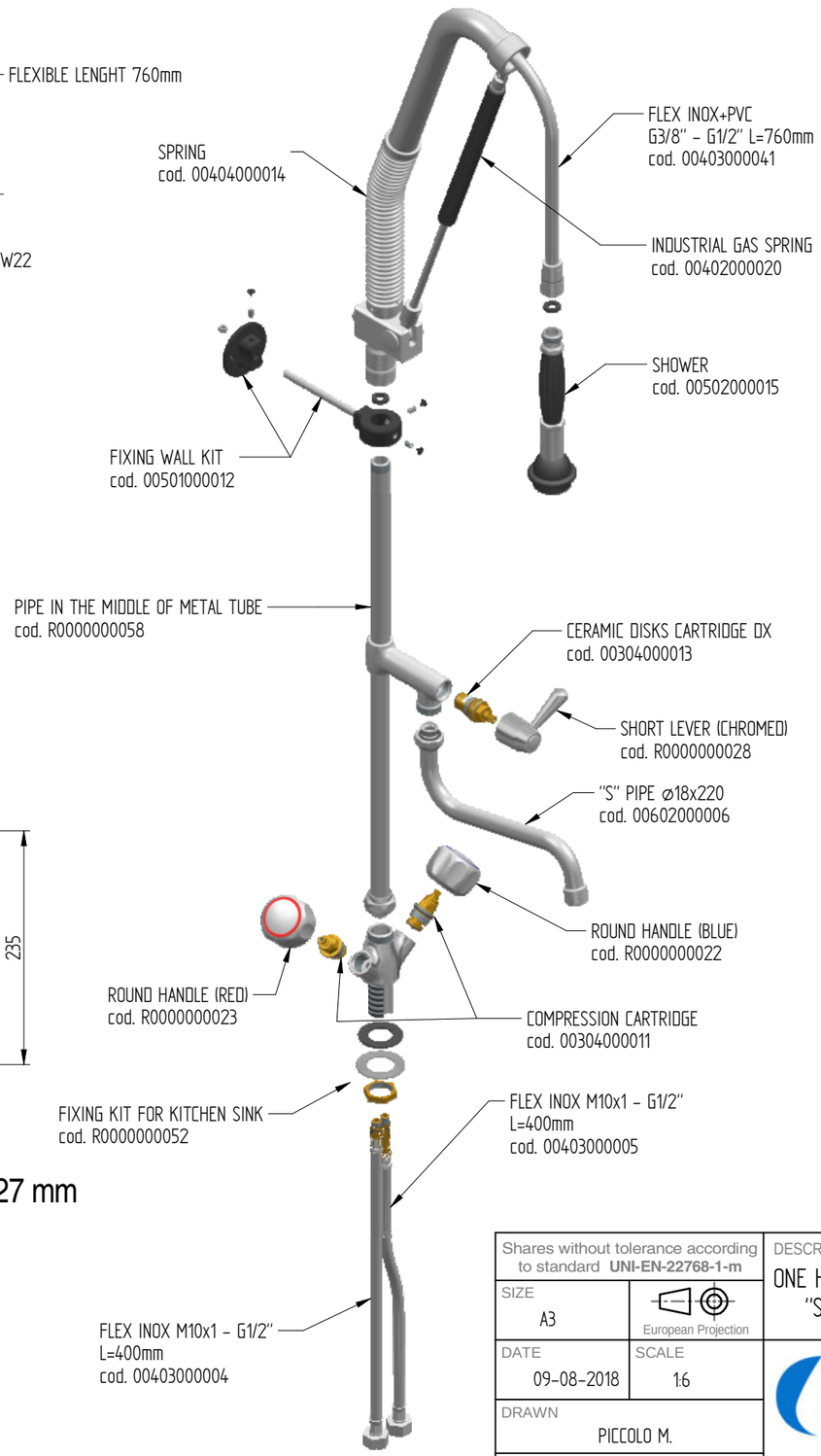



FLOW RATE : 12 L/min at 3,5 BAR only from the shower
14 L/min at 3,5 Bar onlly from the spout
18 L/min at 3,5 BAR when both + spout are open

Shares without tolerance according to standard **UNI-EN-22768-1-m**		DESCRIPTION: ONE HOLE PRE-RINSE UNIT WATER-STOP SYSTEM WITH SWINGING "S" SPOUT IN THE MIDDLE OF TUBE AND ROUND HANDLE	CODE: R0101020175
SIZE: A3	European Projection		WEIGHT: 5,55 Kg
DATE: 09-08-2018	SCALE: 1:6		
DRAWN: PICCOLO M.			
VALIDATE: PICCOLO M.			

MONOLITH
DESIGN AND TECHNOLOGICAL RESEARCH FOR WATER
VIA DELL'ARTIGIANO 8/F-8-G , 31050 MONASTIER di TREVISO (TV) tel: 0422 842157 - fax: 0422 708978

DONE WITH DESIGN CAD - PROHIBITED THE CHANGES MANUAL

Rev. 00