FLOW RATE : 12 L/min at 3,5 BAR only from the shower
14 L/min at 3,5 Bar onlly from the spout
18 L/min at 3,5 BAR when both + spout are open

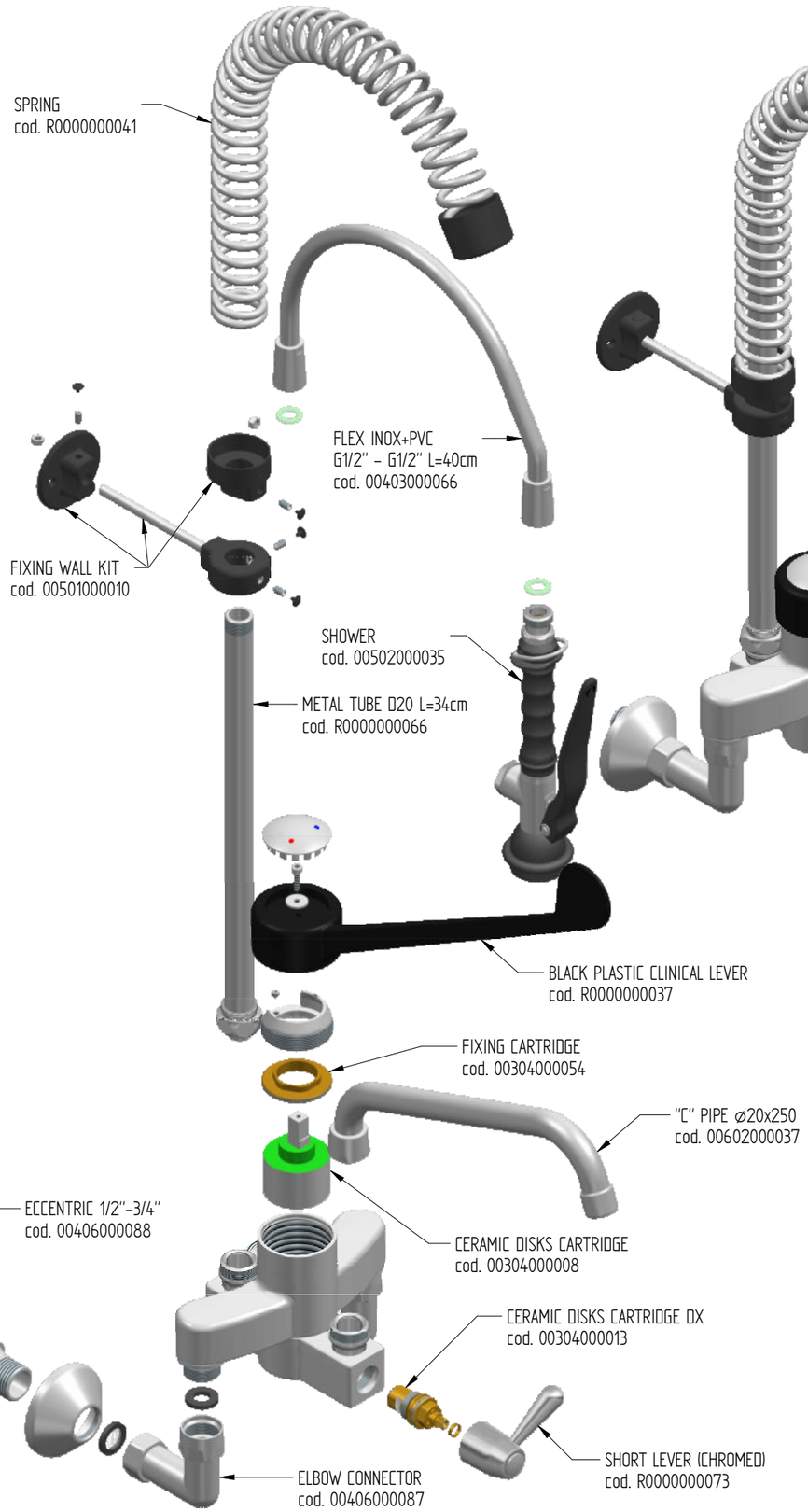

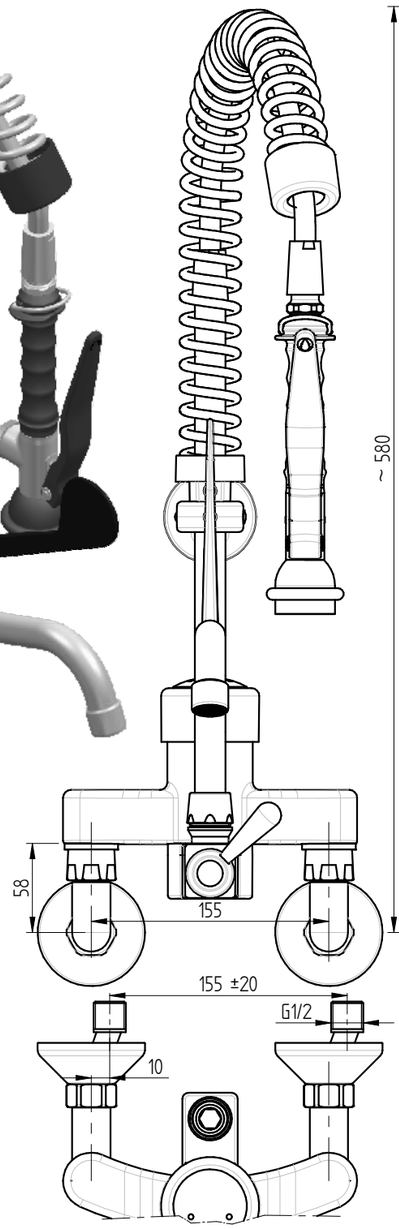

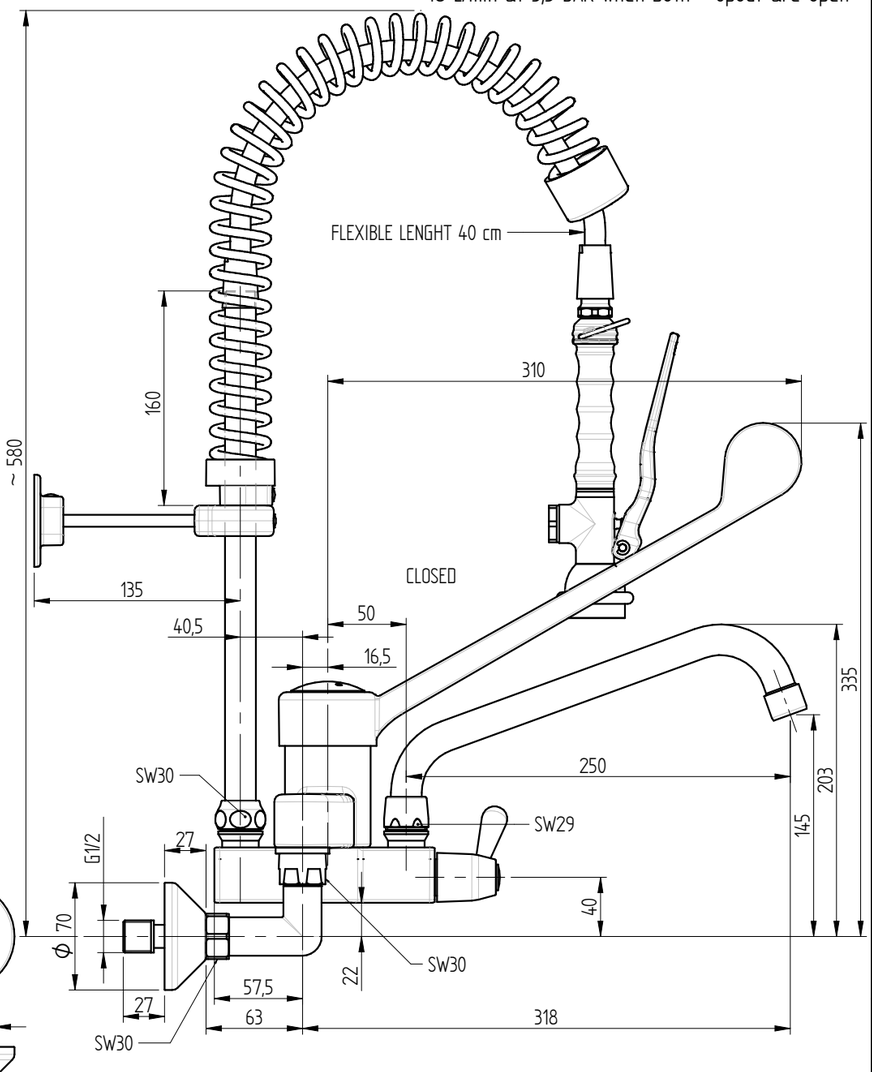

Shares without tolerance according to standard **UNI-EN-22768-1-m**	DESCRIPTION: TWO HOLES PRE-RINSE UNIT MIXER WALL MOUNTED, MINI VERSION, SWINGING SPOUT, PLASTIC (PA6) CLINICAL LEVER AND BASIC SHOWER HAND. 155mm WHEELBASE WITH ±20mm TOLERANCE	CODE: ERAMINI308
SIZE: A3 — European Projection		WEIGHT: 6,22 Kg
DATE: 06-02-2020	SCALE: 1:4	
DRAWN: PICCOLO M.		
VALIDATE: PICCOLO M.		

MONOLITH
DESIGN AND TECHNOLOGICAL RESEARCH FOR WATER
VIA DELL'ARTIGIANO 8/F-8-G , 31050 MONASTIER di TREVISO (TV) tel: 0422 842157 - fax: 0422 708978

DONE WITH DESIGN CAD - PROHIBITED THE CHANGES MANUAL

Rev. 02 – 26/05/2023