CB 425

LIST OF THE EXPLODED VIEWS



SHELL ASSY

COOLING SYSTEM

HYDRAULIC CIRCUIT

ELECTRIC PARTS

Rev. 11 - 16/01/2015

SHELL ASSY

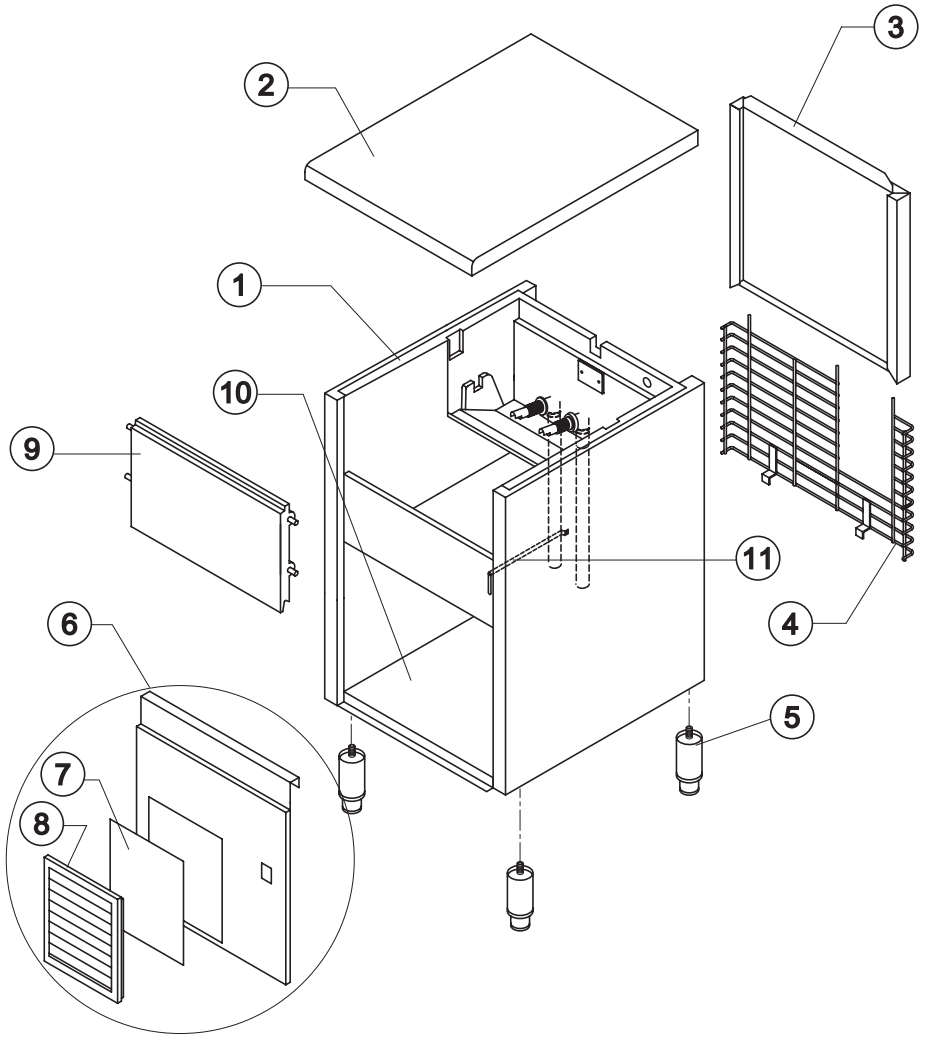

Ref.	Spare Description		Code
1	Foamed Cabinet Assy	See Table	-
2	Top Assembly		C22692
3	Rear Panel Assembly		C21183
4	Rear Grid		D12006
5	Foot		20613
6	Front Grid Panel		C22508
7*	Filtering Panel		18106
8	Frame + Grid & Filter		C10205
9	Door Assembly		C10297
10	Base Plate		21279
11	Bulb-holder Pipe		20522

Ref. 1 - Foamed Cabinet Assy

Condensation	Code
Air	RC11014A
Water	RC11014W

Rev. 11 - 16/01/2015

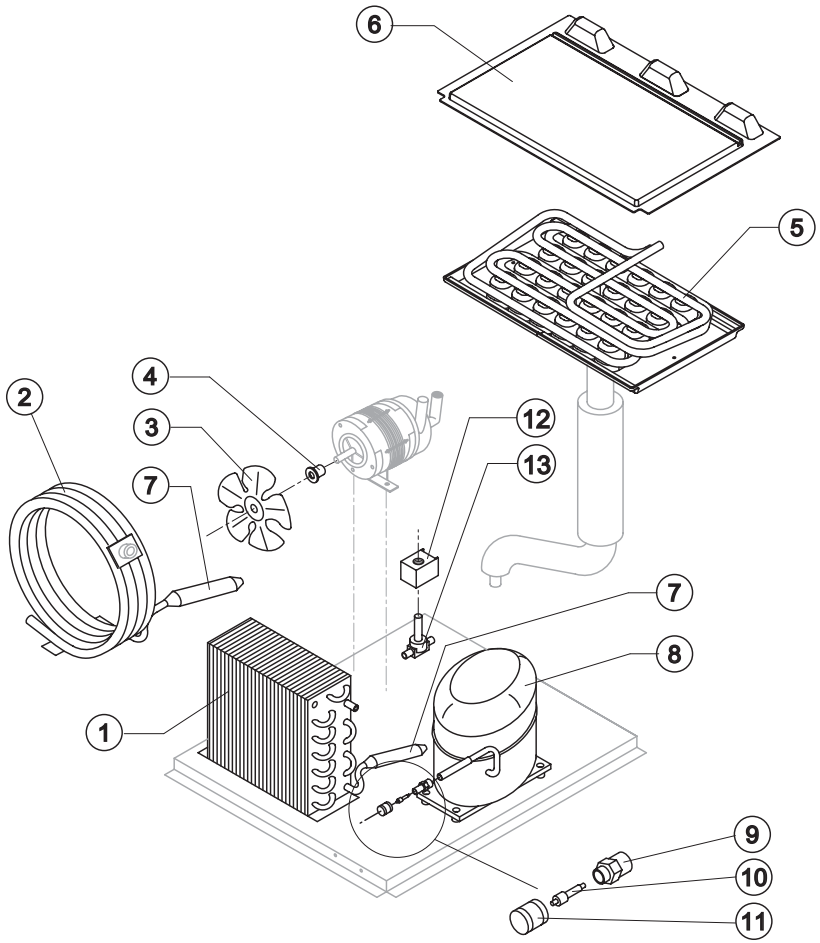

Common Parts

Ref.	Spare Description		Code
3	Sucking Fan		10213
4	Fan Fixing Hub		10014
5	Evaporator	See Table	-
6	Evaporator Cover Panel	from s/n. 224531	10449
7*	Molecular Drier		14009
8	Compressor	Vedi Tabella	-
9	Vacuum-Charge Valve Body		14007
10*	Vacuum-Charge Valve Device		14005
11*	Vacuum-Charge Valve Plug		14006
12*	Hot Gas Valve Coil	See Table	-
13*	Hot Gas Valve Body		20410

Parts for Air Cooled Version Only

Ref.	Spare Description	Code
1	Air Condenser	20019

Parts for Water Cooled Version Only

Ref.	Spare Description	Code
2	Water Condenser	14374

Ref. 5 - Evaporator

Kind of Cube	Code
18 g. (Standard)	D10046
33 g.	D10089
13 g.	D10417
42 g.	D10465

Ref. 8 - Compressor

Voltage	Code
T11	23505A
T12	23495A
T13	23678
T19	23678

Ref. 12 - Hot Gas Valve Coil*

Voltage	Code
T11	23091
T12	23091
T13	23256
T19	23256

Rev. 11 - 16/01/2015

HYDRAULIC CIRCUIT

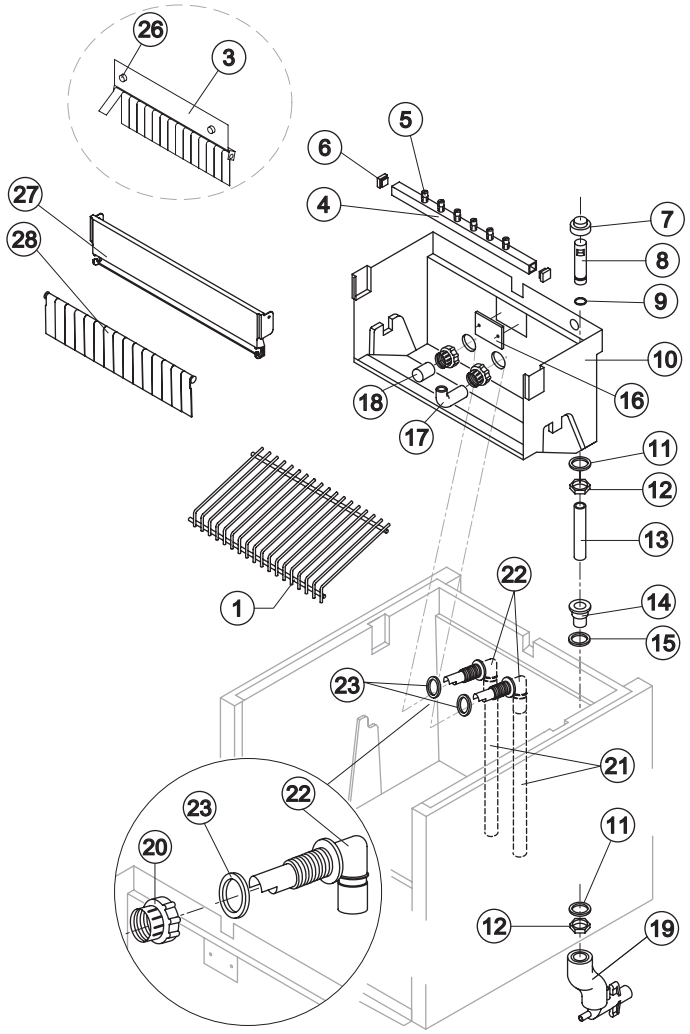

Common Parts

Ref.	Spare Description		Code
1	Ice Cubes Slide	See Table	-
3	Panel with Flags	Till s/n. 380311	K10534
4*	Sprayers Bar Assy	See Table	-
5	Sprayer		D20002
6	Sprayers Bar Plug		10012
7*	Overflow Cap		10305
8*	Overflow Pipe		10133
9*	OR Gasket for Overflow Pipe		20233
10	Inner Basin		10253
11	Semirigid Polyethylene Gasket		13007
12	Bin Discharge Nut		10096
13*	Overflow Pipe		13108
14	Water Outlet Nipple		10472
15	Silicone Gasket		13006
16	Slide Keep Plate		10009
17	Sprayers Feeding Pipe		13005
18*	Pump Suction Filter		20005
20	Fittings Locking Ring		10405
21	Pump Suction/Delivery Pipe		13139
22	Fitting for the Pump Suction/Delivery Pipes		10404
23	Gasket of the Pump Suction/Delivery Pipes		13143
26	Fixing Screw	Till s/n. 380311	20009
27	Flags ABS Support	Current Version	10526
28	Rod with Flags	Current Version	C10534

Ref. 1 - Ices Cube Slide

Kind of Cube	Code
18 g. (Standard)	D12008
33 g.	D12030
13 g.	D12038
42 g.	D12030

Ref. 4 - Sprayers Bar Ass.*

Kind of Cube	Code
18 g. (Standard)	C20029
33 g.	C20155
13 g.	C20189
42 g.	C20155

Parts for Air Cooled Version Only

Ref.	Spare Description	Code
19	Discharges Manifold	C10006

Parts for Water Cooled Version Only

Ref.	Spare Description	Code
19	Discharges Manifold	C26452

Rev. 11 - 16/01/2015

ELECTRIC PARTS

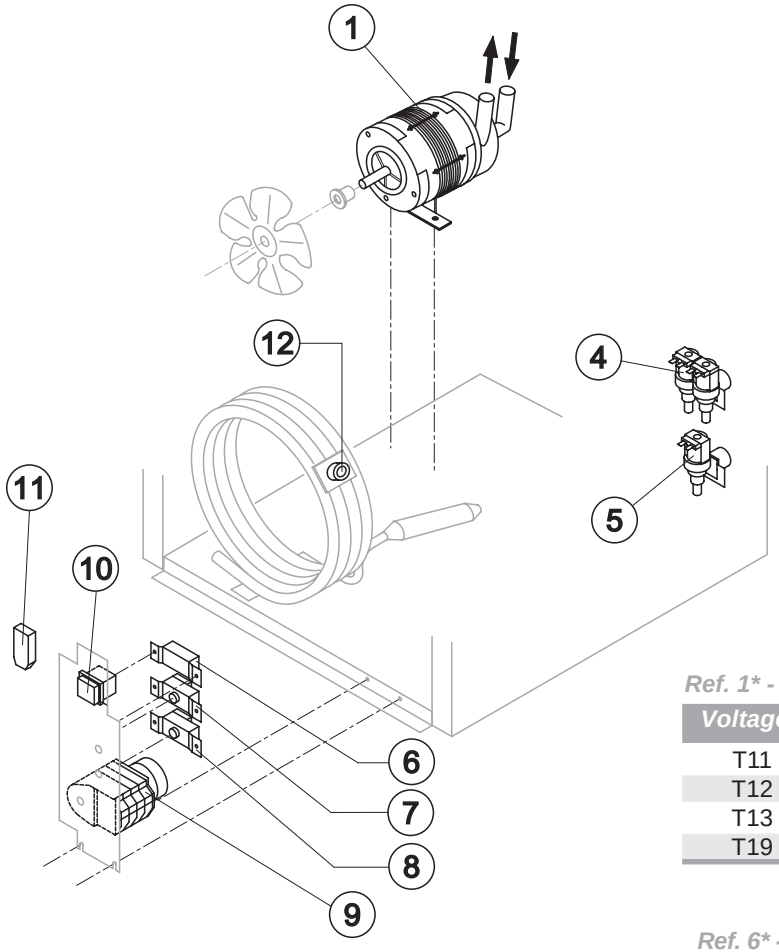

Common Parts

Ref.	Spare Description		Code
1*	Pump Assy	See Table	-
7*	Bin Thermostat		R23005
8*	Evaporator Thermostat		R23591
9*	Timer	See Table	-
10*	Green Light Switch (On-Off)		23327

Parts for Air Cooled Version Only

Ref.	Spare Description		Code
5*	1 Way- Water Inlet Valve	See Table	-

Parts for Water Cooled Version Only

Ref.	Spare Description		Code
4*	2 Ways Water Inlet Valve	See Table	-
6*	Condenser Pressure Switch		23175
11	Anti Radio Interference Filter	Only T11	C23457
12*	Safety Thermostat		C23114

Ref. 1 - Pump Assy*

Voltage	Code
T11	C23377
T12	C23377
T13	C23663
T19	C23663

Ref.4-2 Ways- Water Inlet Valve*

Voltage	Code	
T11	23010	
T12	23010	
T13	23646	
T19	23646	Till s/n. 605530

Ref. 5 - 1 Way- Water Inlet Valve*

Voltage	Code	
T11	23001	
T12	23001	
T13	23260	
T19	23410	Current Version
T19	23260	Till s/n. 605530

Ref. 6 - Cond. Pressure Switch*

Voltage	Code
T11	23175
T12	23175
T13	23175
T19	23680

Ref. 9 - Timer*

Voltage	18g Cube	33g Cube	13g Cube	42g Cube	
T11	23222	23248	23247	23780	
T12	231078	231080	231077	231080	
T13	23259	23786	23258	23786	
T19	23833	TBD	TBD	TBD	Current Version
T19	23259	23786	23258	23786	Till s/n. 605530

Rev. 11 - 16/01/2015