RLX 31

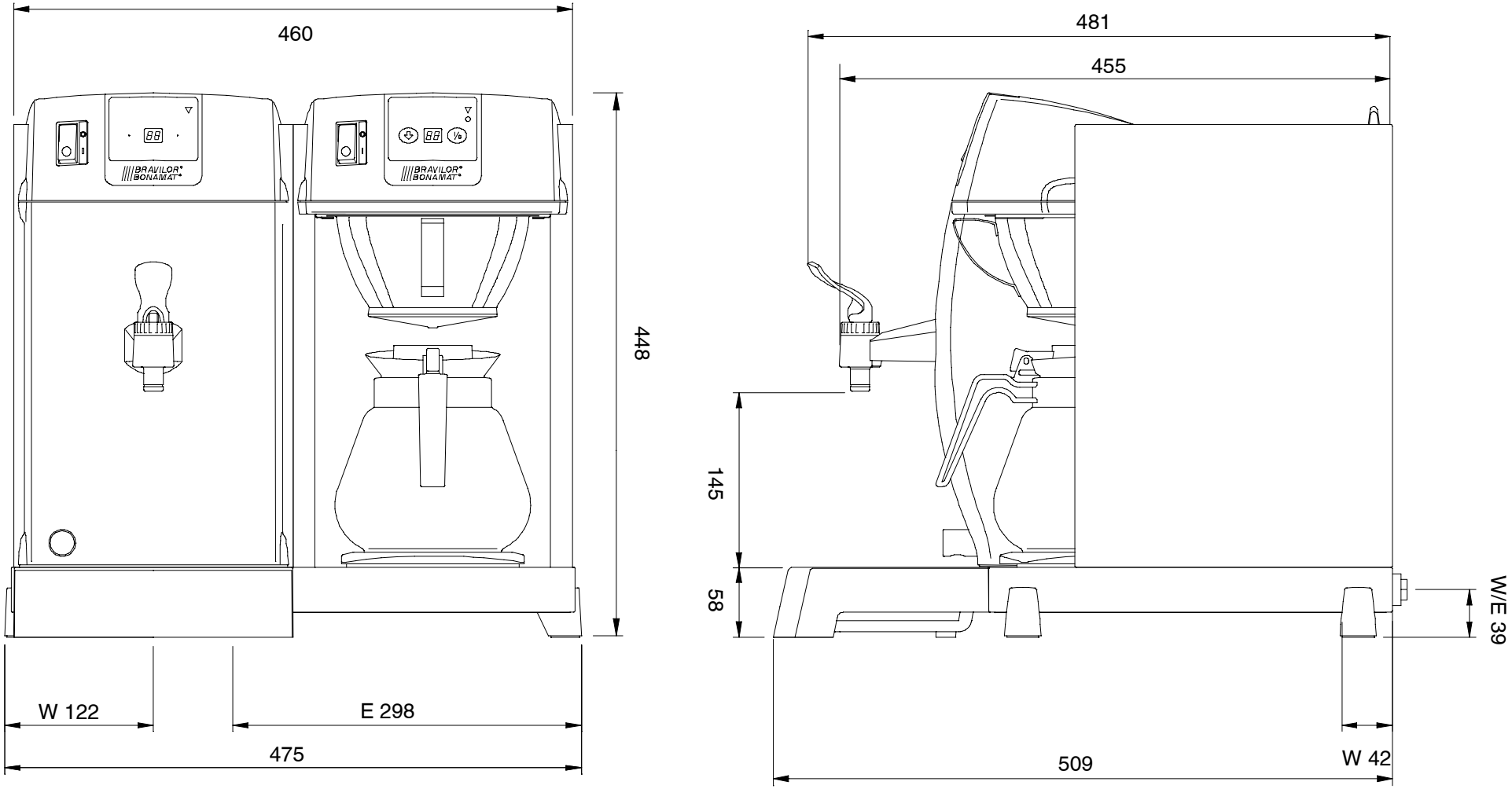

©Copyright Bravilor Bonamat B.V.