HWA 40 / HWA 70

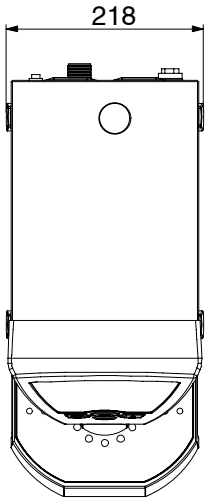

HWA 40

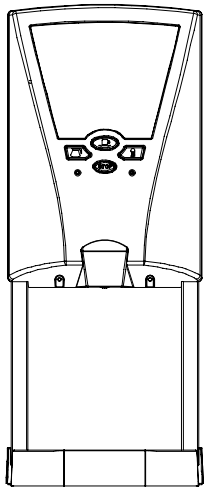

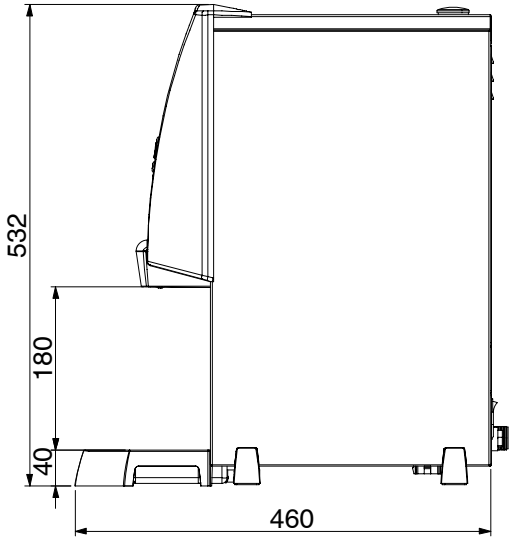

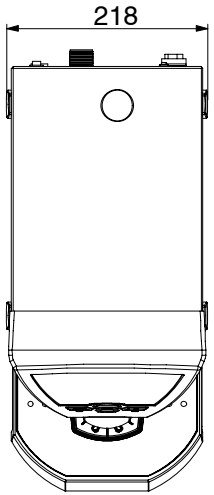

HWA 70

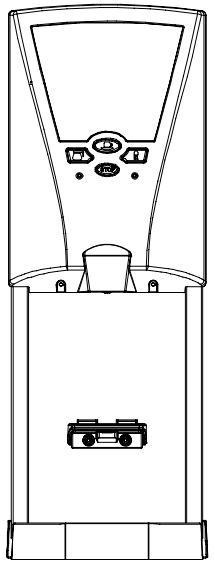

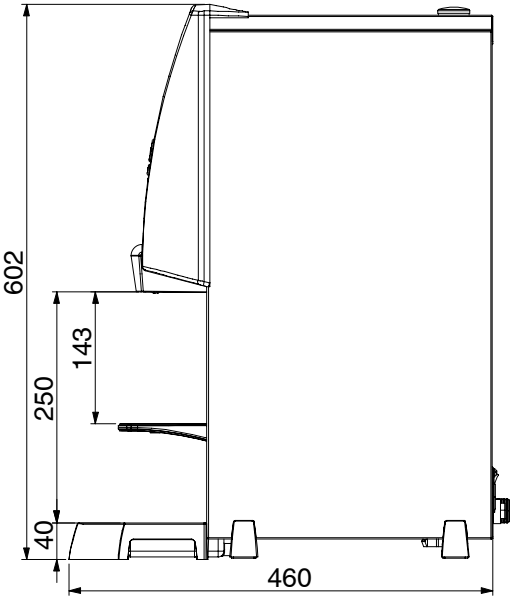

©Copyright Bravilor Bonamat B.V.