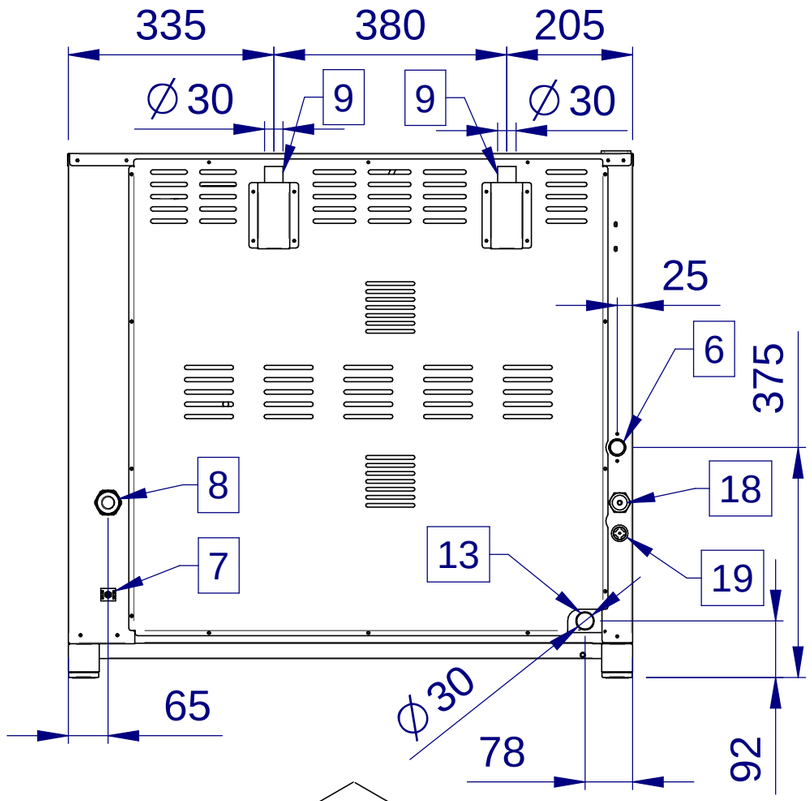

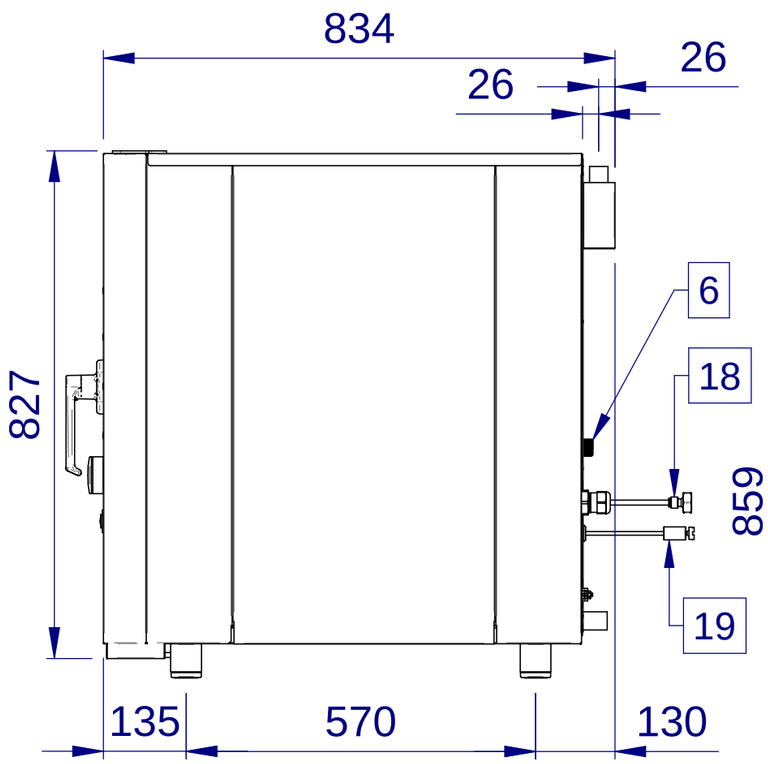

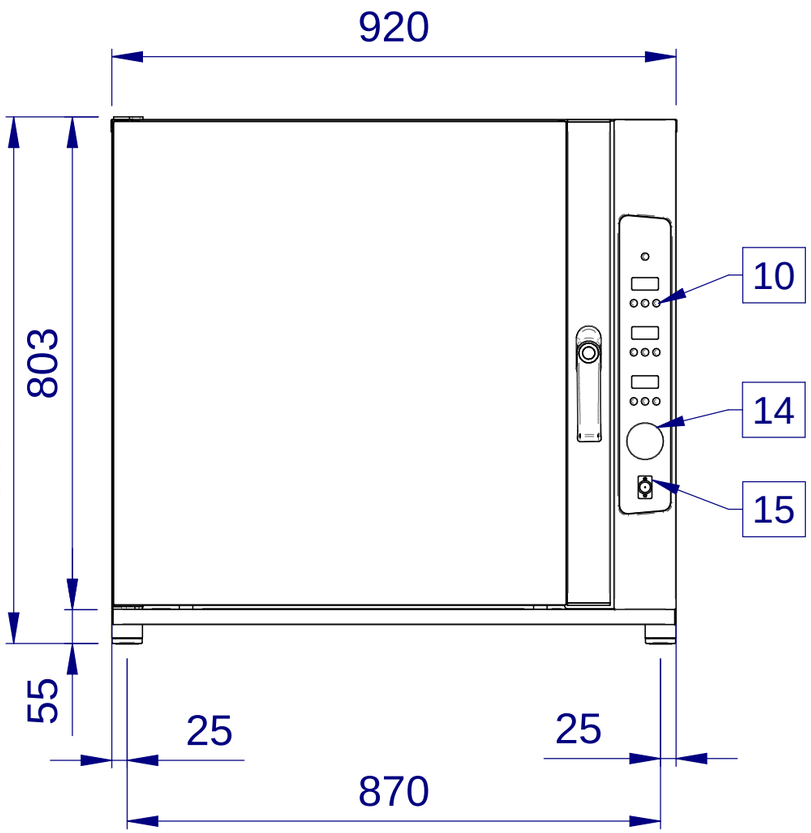

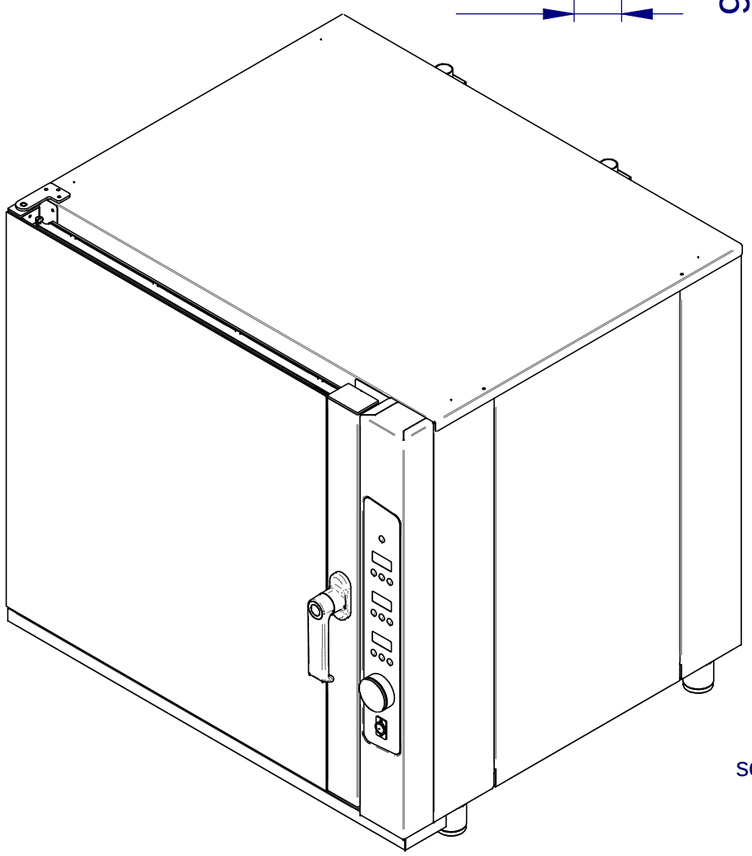

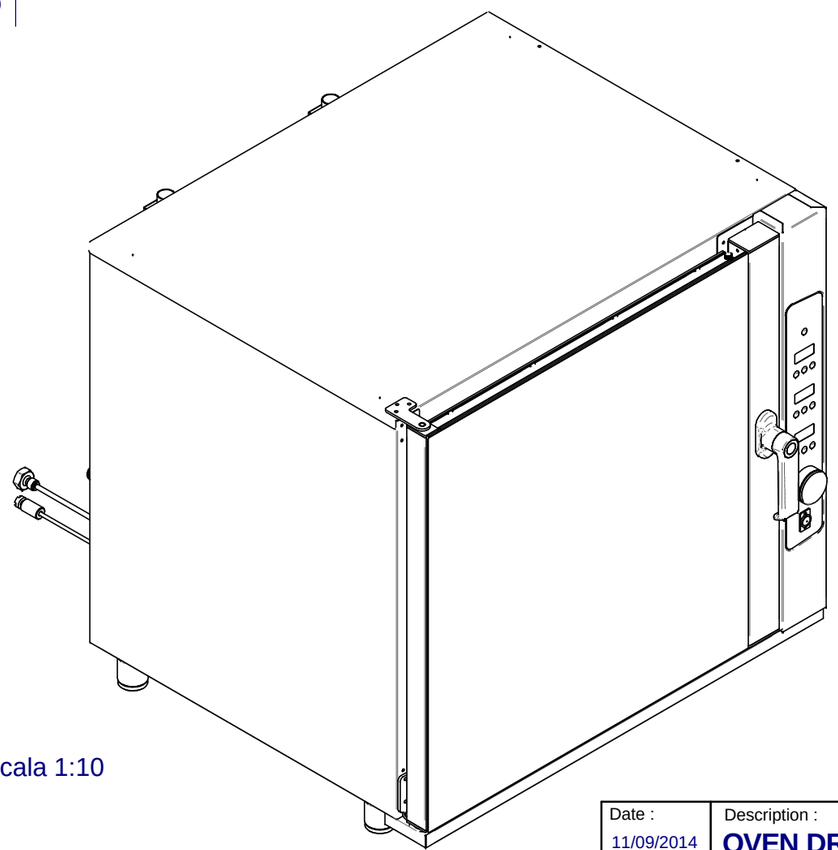

scala 1:10

ENGLISH
06. HUMIDIFY SOLENOID VALVE 3/4" BSP (GAS)
07. UNIPOTENTIAL TERMINAL
08. COMPRESSION CABLE GLAND
09. HOT FUMES EXHAUST CHIMNEY
10. DIGITAL CONTROL
13. DRAIN PIPE
14. ENCODER KNOB
15. CORE PROBE IN-LET
18. WATER WASHING SYSTEM 3/4" BSP (GAS)
19. DEGREASING DETERGENT WASHING SYSTEM 3/4" BSP (GAS)

Scale : 1:10	mm	A3	Reserved property :	Drawing by: C. R.	Date : 11/09/2014	Description : **OVEN DRAWINGS**
					Model : L06DC, G07DC	Name: **AB6D, AP7D**

APACH