PRINCE CASTLE INC.
WORLDWIDE

212-GFCCE BATCH BUN TOASTER



Model 212-GFCCE

The Prince Castle Batch Bun Toaster is designed to perfectly caramelize large quantities of buns easily and quickly. This toaster ensures uniform heat throughout the bun, and seals its surface against saturation by condiments. The model 212-GFCCE toaster features an adjustable cycle timer and an adjustable thermostat. A stainless steel bun board with a heavy-duty insulated handle ensures proper crush for perfect caramelization. The toaster holds up to 12 complete buns at a time and adjusts to accommodate different thicknesses. ***NOTE:*** 1 spatula included.

STANDARD FEATURES

- Toasts up to 12 complete buns at one time.
- Provides perfect carmelization by contact toasting for better tasting product and prevents condiments from saturating buns.
- Unit is easy to clean and maintain.
- Visible and audible alarms signal toast cycle is complete.
- Adjustable thermostat provides precise toasting for all types of bread products.
- Adjustable bun thickness controls.
- Adjustable timer from 20-100 seconds.
- Stainless steel and aluminum construction.
- Durable nickel-plated heating platen provides uniform heat.
- One-year parts and labor warranty.

SUGGESTED SPECIFICATIONS

Model 212-G Series Portable Contact Batch Bun Toaster features a nickel-plated heating platen, adjustable thermostat, visible and audible alarms, adjustable timer, adjustable bun thickness controls, and a stainless steel bun board. Up to 12 regular 4" (10.16 cm) bun capacity.

212G-1205

BATCH BUN TOASTER

212-GFCCE

355 E. Kehoe Blvd.; Carol Stream, IL 60188; Tel: (630)462-8800; Fax: (630) 462-1460; Toll Free (800) PCASTLE; www.princecastle.com

More user manuals on ManualsBase.com

212-GFCCE BATCH BUN TOASTER

PRINCE CASTLE INC. WORLDWIDE

SPECIFICATIONS

DIMENSIONS

MODEL NUMBER	WIDTH IN. (CM)	HEIGHT IN. (CM)	DEPTH IN. (CM)	SHIPPING WT. LB. (KG.)
212-GFCCE	$27^{1}/_{2}$ (69.85)	$11^{5}/_{8}$ (29.53)	16.0 (40.64)	70 (31.7)

ELECTRICAL

MODEL NUMBER	VOLTS	Hz.	WATTS	AMPS	PHASE	PLUG NUMBER	PLUG CONFIG.
212-GFCCE	230	50	2300	10	Single	CEE-17	

*All units equipped with 6 ft. (182.8cm) line cord.

VOLTAGE ACROSS WATTAGE

208V	50/60Hz	1800W
220V	50/60Hz	2100W
230V	50/60Hz	2300W
240V	50/60Hz	2500W

ACCESSORIES

MODEL	DESCRIPTION
212-419	Aluminum Bun Spatula (1 included)
224-5	Bun and Utility Pan
212-635	Release Sheet Mounting Kit
212-491S	Release Sheet (Package of 2)

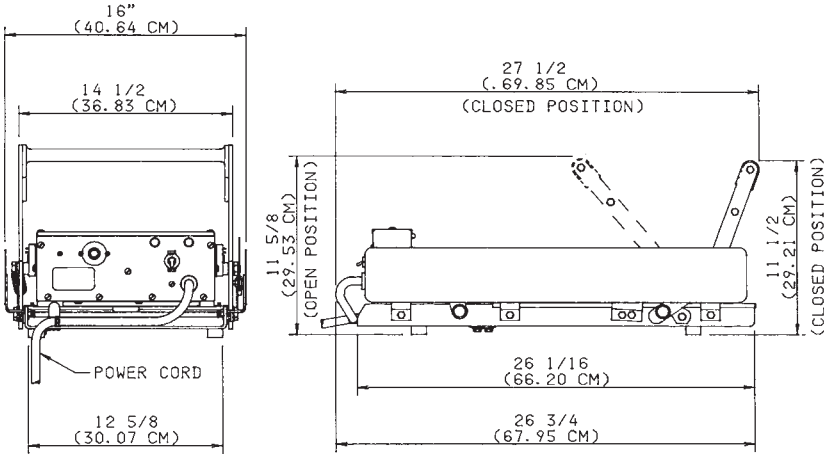

*Designs and specifications are subject to change without notice.

Genuine Parts Protect YOU All-Ways !

355 E. Kehoe Blvd.; Carol Stream, IL 60188; Tel: (630)462-8800; Fax: (630) 462-1460; Toll Free (800) PCASTLE; www.princecastle.com