CHEFTOP-BAKERTOP MIND.Maps™ ONE

OPERATION MANUAL



SAFETY REGULATIONS AND COOKING ADVICE

Safety regulations **4**

General operating instructions **6**

COOKING ADVICE 6
BLACK-OUT 6
TROLLEY LOADING AND USE (ONLY FREE-STANDING TROLLEY OVENS) 7

Using Master Touch **8**

MAINTENANCE

Cleaning **27**

EXTERNAL STEEL STRUCTURES, OVEN CAVITY SEAL, CORE PROBE 27
INTERNAL PART OF THE OVEN CAVITY 27
PLASTIC SURFACES AND CONTROL PANELS 27
INSIDE AND OUTSIDE OVEN DOOR WINDOW GLASS 27

After-sales assistance **28**

Inactivity **29**

End of life disposal **29**

Certification **29**

Guarantee **30**

USE

Set Menu 9

SETTING COOKING PARAMETERS 10
SETTING THE PRE-HEATING AND COOKING STEPS 10
SAVE THE SET RECIPE 11
STARTING A COOKING CYCLE 12
COOKING END 13
RECALLING A SAVED COOKING CYCLE 13
FURTHER INFORMATION: CORE PROBE 14

MIND.Maps Menu 15

MIND.MAPS 15
HOW TO DRAW A MIND.MAPS CURVE 15

Programs Menu 19

MY PROGRAMS 19
MY MIND.MAPS 19

Unox.Care Menu 20

ROTOR.KLEAN 20
UNOX.PURE 21
UNOX.PURE-RO 22

Settings Menu 23

USER SETTINGS 23

SAFETY REGULATIONS FOR USE

- Following procedures other than those indicated in this guide to use and clean the appliances is considered inappropriate and may cause damage, injury or fatal accidents; in addition to invalidating the guarantee and relieving UNOX of all liability.
- Children must not play with the appliance. Cleaning and maintenance to be implemented by the user shall not be carried out by children without supervision.
- Children must be supervised to ensure they do not play with the appliance.
- This appliance can only be used for cooking food by qualified personnel in industrial and professional kitchens upon completion of scheduled training courses; all other uses are not compliant to the scope of use and therefore hazardous.
- If the appliance does not function or if there are any functional or structural alterations, disconnect the electricity, water and gas supplies (only for gas ovens) and contact a UNOX authorised customer service assistant. Do not attempt to independently repair the appliance. Request UNOX original spare parts for any repairs necessary.
- Failure to observe these regulations may cause damage and (fatal) injuries, and also invalidates the guarantee.
- To ensure that the appliance is in perfect use and in a safe condition, maintenance and inspections should be performed yearly by an authorised customer agent service.
- The humidity sensing system must be calibrated during initial installation (contact the Unox Service) and when the oven requires it.

RISK OF BURNS and INJURY!

- While cooking and during cooling of all appliance parts, be careful to:
- Only touch the appliance control components or handle because the external parts are extremely hot (temperature above 60°C - 140°F).
- If it is necessary to open the door, perform this operation slowly and with utmost caution while being careful of extremely hot exhaust steam may be released from the oven cavity.
- Wear heat resistant clothing appropriate to the use at hand to move containers, accessories and other objects inside the oven cavity.
- Be extremely careful when removing trays from the oven cavity.
- Extract the probe from the core of foods before removing trays from the oven and place it in the external probe holder. Before extracting the tray check that the probe cable is not in the way. Handle the probe with care because it is extremely sharp and, after use, reaches high temperatures.
- During the COOL function (cavity cooling), the appliance supplies water and keeps the door closed to prevent injuries caused by hot steam.
- Do not remove or touch the protective fan casing, the fans or the heating elements while the appliance is turned on.
- Carefully read the safety data sheet of the product before handling and using the detergent.
- Do not open the oven door during washing as this could cause injury to eyes, mucous membranes and skin caused by contact with the cleaning chemicals used since they are sprayed by the rotor within the cooking chamber and moved by strong drafts.
- It is mandatory to use PPE specific for the detergent (see the product safety data sheet) when carrying out maintenance operations on the water circuit of the oven. Specifically, gloves and goggles must be used since there could be detergent residues in parts of the circuit that could be under pressure.
- For no reason should the water circuit of the oven, which begins with the 3/4" connection, with a built-in non-return valve, and includes all the piping and accessories downstream of this be tampered with because this could cause damage, injury or death.

Only for free-standing trolley ovens:

- Always lock the front wheel brakes into place after putting loads into the oven cavity and move them when not needed.
- Always lock the trays into their guides.
- Be extremely careful when moving because the trays may contain hot fluids that may spill or the trolleys may fall over (for example if moved across uneven floors or through doors).

RISK OF FIRE!

- Before using the appliance make sure that no non-compliant objects (instruction manual, plastic bags or other) or detergent residue is inside the oven cavity; likewise, make sure that the smoke exhaust is free of obstructions and that no flammable materials are in its vicinity.
- Do not place sources of heat (i.e. grills, fryers, etc.), highly flammable substances or fuels in the vicinity of the appliance (i.e. gasoline, petrol, bottles of alcohol, etc...).
- Do not use highly flammable food or liquids while cooking (ex. alcohol).
- Always keep the oven cavity clean, performing daily cleaning after each cooking cycle: fats or food residue left inside the appliance could ignite!

RISK OR ELECTRICAL SHOCK

- Do not open the compartments marked with these symbols: access is reserved to qualified personnel authorised by UNOX. Failure to observe this regulation invalidates the guarantee and may cause damage or (fatal) injuries.

Only for gas ovens

- Always maintain the smoke exhaust pipe free of obstructions (e.g. objects, trays, etc...) that is located on the top portion of the oven.
- Always switch-on the cooker hood when using the appliance if installed.
- If the appliance is connected to a flue, this must be:
  - kept free of any obstructions - risk of fire!
  - regularly cleaned and inspected as called for by the relative standards of the country of use - risk of fire!
- The appliance must be installed far from air currents or drafts - risk of fire!
- Make sure that ventilation inlets and the underlying part of the appliance are clean and free of obstructions (e.g. objects near the appliance).
- If the odour of gas is detected:
  - immediately shut-off the gas supply;
  - immediately ventilate the area;
  - do not turn on any electrical switch or provoke sparks or flames;
  - use an external telephone to contact the gas utility company.

Before using the appliance carefully read section "Safety regulations"

If cooking large amounts of greasy foods, place an empty tray without holes on the lowest grill holder of the oven. Alternatively, an appropriately sized container may be used.

- When using the appliance for the first time be sure to thoroughly clean the inside of the oven cavity and the accessories (see chap. **Cleaning** on page **27**); let the oven run empty at maximum temperature for 1 hour to eliminate any unpleasant odours caused by protective factory grease.
- When the oven door is opened, unless the "COOL" function has been selected, heating and fan operation stops automatically. The built-in fan brake is activated (The fan continues to rotate for a short time only).
- If the appliance was left running for more than 15 minutes without selecting an operating or automatic cleaning mode, stand-by is automatically engaged for energy savings.
- To exit STAND-BY MODE simply touch the START/STOP button.
- Operate the appliance at a room temperature between +5°C and +35°C.
- Do not salt food inside the oven cavity. If this is not possible, clean the oven as soon as possible (see **Cleaning** chapter on page **27**).
- To prevent boiling, do not fill containers with liquids or foods that liquefy with heat in quantities exceeding those that can easily be kept under control.
- It is possible to set the relative humidity to 0% on the MasterTouch display to operate the oven with the closest cooking cavity.

For safety reasons, the last tray should NEVER be placed at a height greater than 160 cm. If necessary to do so, **it is mandatory to post the sticker contained in the "Starter Kit" at the height of 160 cm.**

COOKING ADVICE

- It is always better to preheat the oven to a temperature at least 30-50°C higher than is required for cooking, in order to reduce the effects of heat lost when opening the door.
- Use the UNOX grills and trays; try to distribute food uniformly on these while avoiding stacking and excessive quantities.
- Always respect the loading instructions for your appliance.

BLACK-OUT

In the event of a black-out or shutdown of the machine, on restart the appliance will resume the program previously in progress (e.g. a Multitime recipe). The duration of the cooking cycle may be extended by a maximum of 2 minutes.

Only use dry and clean fingers to navigate and set parameters. Avoid using tools such as forks, spoons, etc.
The pen supplied must only be used to draw cooking curves in the Mind.Maps menu and for signatures.

TROLLEY LOADING AND USE (ONLY FREE-STANDING TROLLEY OVENS)

Use only UNOX trolleys, trays and grills.

- Load the trolleys without overloading them: it is normal for the trolley to be pushed downward and lower in height, depending on how full the trays are.
- The trolley is loaded into the oven using the bottom trolley guides.
- Lock the trays into place when moving the trolley as shown in the figure.
- Always lock the front wheel brakes into place after putting loads into the oven cavity and each time these are not to be moved.
- Be extremely careful when moving because the trays may contain boiling fluids that may spill or the trolleys may capsize (for example if moved across uneven or inclined floors or through doors).

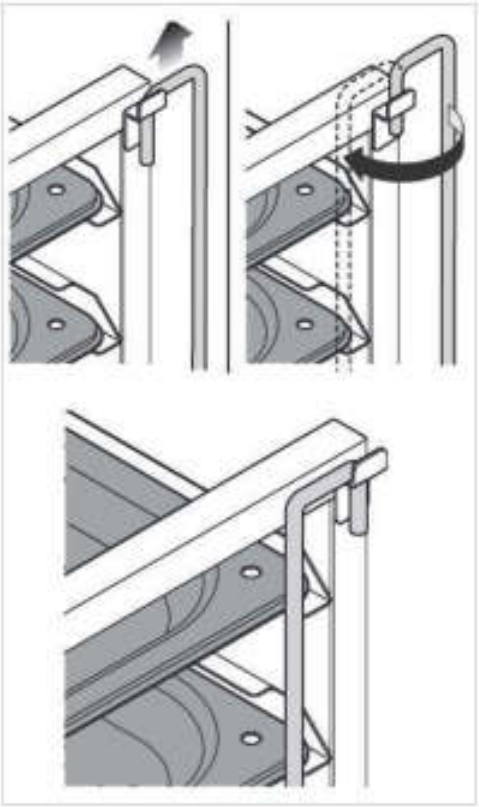

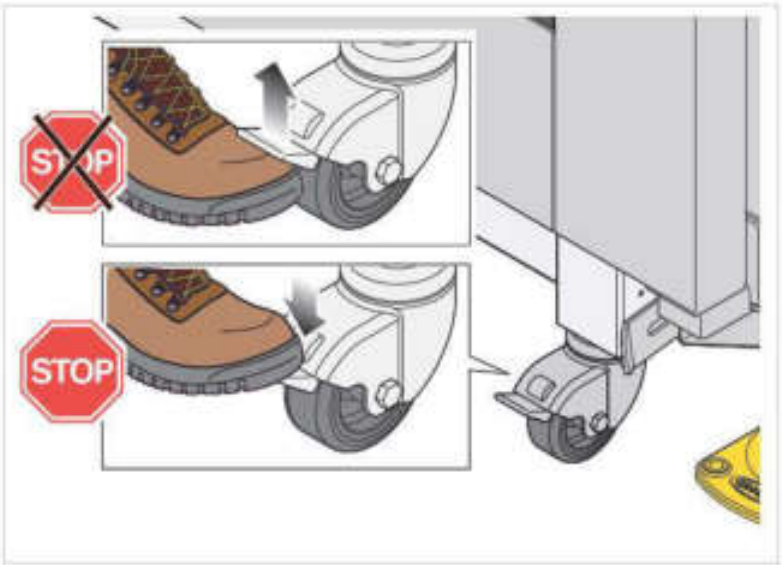



MIND MAPS
A new simple, quick and intuitive way to set cooking parameters.

See further information on page **15**





SET
This enables "manual" cooking, where the user needs to set the following cooking parameters:

See further information on page 9

UNOX.CARE
Enables access to the washing list

See further information on page 20

PROGRAMS
Enables access to a cooking cycle list previously stored using the "**MENU SET**" or to create and store new recipes.

See further information on page 19

SETTINGS
Enables you to set the various parameters (date/time, unit of measurement etc...)

See further information on page 23

The button is used to select the equipment connected to the master oven (e.g. a prover or SlowTop): therefore, the entire MAXi.Link cooking column can be controlled with a single Touch Screen.

Only the menus that can be used with the selected equipment will be displayed.







Set Menu

This enables "manual" cooking, where the user needs to set the following cooking parameters:
- cooking time or core temperature (the two parameters reciprocally exclude each other);
- temperature in oven cavity or Delta "T" (each of these parameters reciprocally excludes the other);
- steam input/extraction in the cavity
- airflow speed.

The set cooking cycle can be saved for future use as required.

chap. Save the set recipe page 11



STEP
This icon shows the number of STEPS being set or in progress.
chap. "Setting the pre-heating and cooking steps" page 10

Cooking time
(from 0 min to 9h:59min:59sec then INDEFINITE).
Cooking ends when the set time is reached.

Oven cavity
temperature
(from 30°C to 260°C).

STEAM.Maxi™
Steam input to cavity

Airflow speed

Setting STEPS
Preheating

START/STOP
Starts the set cooking

Buzzer
this icon can be touched to enable/disable the buzzer at the end of each STEP.
green = buzzer ON
white = buzzer OFF

Core temperature
The core probe is inserted to the core of the food to be cooked: cooking ends when the set core temperature is reached.
chap. "Further information: core probe" page 14

Delta "T" temperature
(from 0°C to 120°C)
Temp. in cavity − Core temp. = Temp. Temp.

DRY.Maxi™
steam extraction from cavity

Airflow speed pulsed (the fan turns off when the oven reaches the set temperature)

Setting STEPS
From 2 to 9

Storing set parameters
chap. "Save the set recipe" page 11

1 SETTING COOKING PARAMETERS

Track bar method

1. Touch the symbol of the parameter to be set; this then changes colour.
2. Touch the horizontal bar (this lights up) and drag the slider to the required value; after three seconds of inactivity, the slider bar disappears.

Button mode − +

1. Touch the symbol of the parameter to be set; this then changes colour.
2. Touch the value to be set (in the case of the parameter "duration" modify the hours, minutes and seconds separately).
3. Use the buttons − + to modify the value.





2 SETTING THE PRE-HEATING AND COOKING STEPS

Each cooking cycle is made up of a minimum of one and a maximum of 9 STEPS, each set with different cooking parameters + one initial and optional pre-heating phase.

To enable use, a cooking cycle must contain at least one STEP.

Cooking does not necessarily require all nine STEPS: set only those required.

The appliance automatically passes from one STEP to the next.



Pre-heating settings

To set the pre-heating STEP:

1. touch the symbol < **(see fig. S1)**;
2. touch the icon **"TEMPERATURE" (see fig. S2)**;
3. drag the cursor to the desired value or
4. use the buttons **"+ and -"**.

Setting STEPS 1 to 9

To set the first STEP and, if necessary, the next steps, touch the symbol > on the parameter setting page one or more times **(see fig. S1)**. The top right of the window displays the STEP currently in the setting phase (e.g. STEP 1/1).

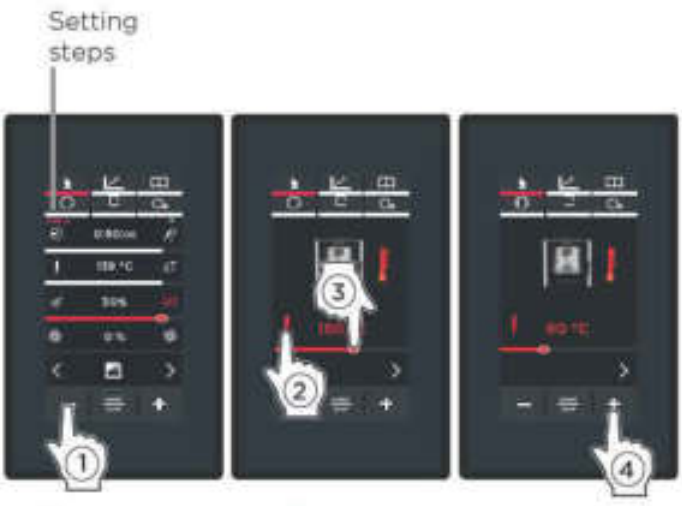

fig. S1 fig. S2 fig. S3

3 SAVE THE SET RECIPE

Saving the recipe which has just been set is optional but recommended because saving a recipe means that it can be used later, at any time, without having to reset the parameters each time.

How to save the set recipe

When the setting is complete (duration of cooking, temperature, etc...), hold down the **"SAVE"** button (1 - **fig. S4**).

The recipes will be saved after entering their parameters, it is not possible to save them after having started them or at their stop.

By touching the various symbols on the display, **fig. S5** the user can:

- (2) (3) assign a recipe name and confirm pressing **"OK"**, (e.g. MERINGUES);
- (4) (5) assign a photo to the recipe, selecting one from those available **(see fig. S6)**;

At the bottom of the screen, the arrows < and > are used to scroll through the groups of photos available (the photos are divided into categories - desserts, pizza, baked goods, etc...).

- (6) (7) assign a tray to the recipe, selecting one from those available **(see fig. S7)**

After having assigned the recipe name, photo and tray, hold down the **"SAVE"** button ((8) - **fig. S4S7**): the screen will appear **fig. S8**.

(9) Touch the position where the recipe is to be saved (e.g. The location under the "COOKIES" recipe): the cooking cycle will be saved with the entered settings.

If a slot already occupied is selected, the program automatically saves the recipe in the first slot available.

At the bottom of the screen, the arrows < and > are used to scroll through the 16 positions available in the group,, while arrows ∨ and ∧ scroll through the 16 groups available.

(10) Touching one of the cooking cycles listed **(fig. S9)**, will open the screen **fig. S10A** that enables the user to:

- (A) view/modify the saved cooking cycle;
- (B) duplicate the cooking cycle (to create one with similar parameters);
- (C) delete a saved cooking cycle: in this case the system requests confirmation before permanently deleting the item **(Fig. S10B)**.
- (D) start the cooking cycle by pressing the **"START/STOP"** button.



fig. S4



fig. S5







fig. S6





fig. S7



fig. S8



fig. S9



Recipes of GROUP 2



fig. S10A


Fig. S10B



"MERINGUES" recipe deleted

4 STARTING A COOKING CYCLE

The **"START/STOP"** button immediately starts the cooking cycle with the previously set parameters **(see fig. S11A-fig. S11B)**.

If the cooking cycle includes a PRE-HEATING step, the screen **fig. S12A** appears indicating:

- (1) the current oven cavity temperature;
- (2) the set pre-heating temperature;
- (3) the option to "skip" pre-heating;
- (4) the option of viewing/modifying the parameters in the subsequent STEPS.

When the set temperature is reached, a buzzer notifies the user of the end of the pre-heating STEP* and an icon appears requesting the user to place the products in the oven **(see fig. S12B)**.

After this operation, STEP 1 is started up automatically as soon as the oven door is closed.

* To mute the buzzer, touch the icon at the top right:
green = buzzer ON
white = buzzer OFF

If you want to discontinue the cooking in progress, hold down the **"START/STOP"** button (approximately 4-5 seconds) until the **"HOME"** screen appears.

It is possible to set the relative humidity to 0% on the MasterTouch display to operate the oven with the closest cooking cavity.



fig. S11A



fig. S11B

fig. S11A: not saved recipe

fig. S11B: saved recipe

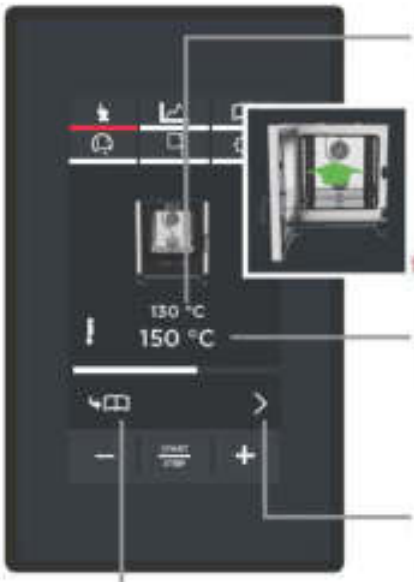

fig. S12A

fig. S12B

(1) Current oven cavity temperature

(2) Set pre-heating temperature

(4) Access to the parameters of subsequent STEPS

(3) Option to "skip" pre-heating" even if previously set

During the cooking cycle, various screens are displayed according to how the steps have been set (by time or using the core probe).
The screen **fig. S13A** appears if the step in progress has been set with entry of the duration.
The screen **fig. S13B** appears if the step in progress has been set with use of the core probe.

see chap. "Further information: core probe" on page 14

The end of each STEP and **automatic** progression to the next step, if set, is indicated by a short acoustic signal.



fig. S13A



fig. S13B

Cooking screen in progress:
End of cooking by time

The screen displays:
- (1) the current STEP in progress;
- (2) the countdown to completion of COOKING;
- (3) the countdown to completion of STEP;
- (4) possibility to modify the parameters for cooking that has already been started or to interrupt the current cooking cycle, by bringing the duration to "00:00:00".

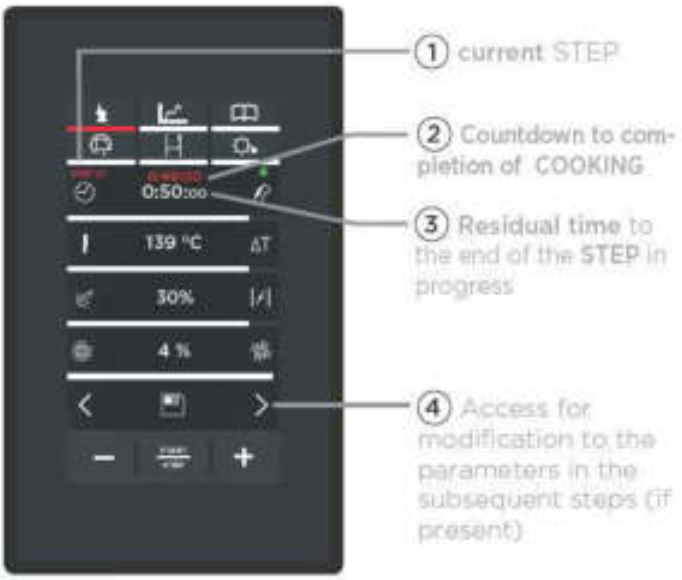

fig. S13A

Cooking screen in progress:
Core probe end of cooking

The screen **fig. S13B** is displayed if all STEPS have been set using the core probe.

The screen displays:
- (1) the current STEP in progress;
- (2) temperature measured by the core probe;
- (3) temperature set on the core probe (at which point cooking is stopped);
- (4) enables changes to parameters after cooking has started.

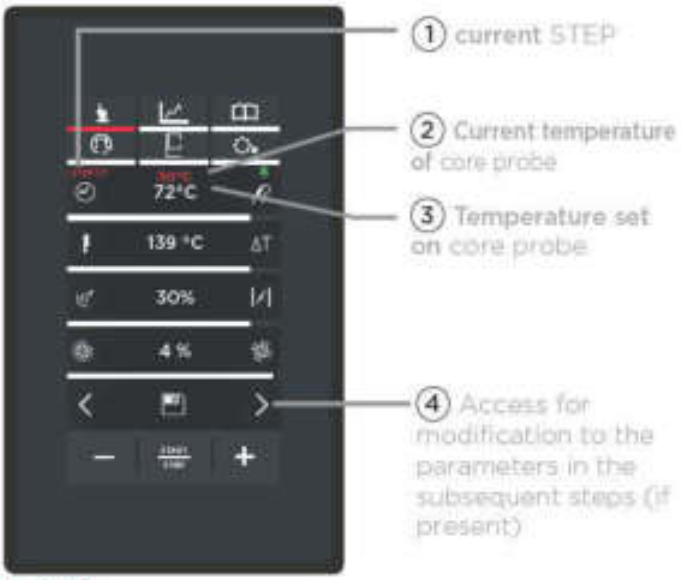

fig. S13B

5 COOKING END

Cooking ends when the set time interval or core probe temperature is reached: the end of cooking is indicated by a long acoustic signal and display of the screen shown alongside **"HOME"** **(see fig. S14)**.

If you want to discontinue the cooking in progress, hold down the **"START/STOP"** button (approximately 4-5 seconds) until the **"HOME"** screen appears.

6 RECALLING A SAVED COOKING CYCLE

To recall the saved cooking cycles, see "Programs Menu" on page 19



fig. S14

FURTHER INFORMATION: core probe

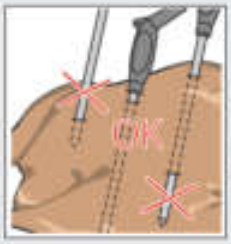

During the cooking cycle, the probe detects the temperature at the "core" of the product: it reaches the temperature set by the user when the product is perfectly cooked both on its surface and innermost portion. The core probe must be poked deep into the food being cooked; make sure that the probe head reaches the product's "core" - the innermost portion - without piercing its way through. If the food you are cooking is rather thin, insert the probe parallel to the oven tray.
When dealing with several foods, insert the probe into the smallest product; when this has reached the required core temperature (and therefore cooking is stopped) take the product out of the oven and insert the probe into the smallest remaining piece.

Then:
A) if the last cooking cycle completed has not been saved, insert all the parameters as before and hold down the **"START/STOP"** button to switch it back.

B) otherwise if the cooking cycle has been saved, access the section **"PROGRAMS"** and switch it back.

see chap. "My programs" on page 19

Handle the probe with care because it is extremely sharp and, after use, the needle reaches high temperatures.

Extract the probe from the food's core before taking out the trays from the oven, and set it on its external probe holder (never leave it dangling inside/outside the oven cavity!).

Before extracting the tray, check that the probe cable is not in the way.

MIND.Maps Menu

A new simple, quick and intuitive way to set cooking parameters.

1 MIND.MAPS

Enables you to set a parametric curve that, at all times, controls the temperature, steam extraction/introduction and the airflow speed in the cavity.

Only the stylus supplied can be used to set this curve.

How MIND MAPS works

The example of **fig. MM2** shows a MIND.Maps screen: the vertical **axis (Y)** shows the parameters to be set as required (e.g. temperature, steam input or extraction, airflow speed, etc...), while the **horizontal axis (X)** shows the time or core probe temperature (only in the case of setting the temperature). By drawing a curve with the stylus the user can modify a parameter (e.g. temperature) over time, minute by minute, with the utmost flexibility and control.

Example **fig. MM2**, shows the setting of the temperature based on the time:

- at 5 minutes, the user sets the temperature at 230°C,
- at 15 minutes the temperature should decrease to 135°C and so forth.

How to draw a MIND.MAPS curve

(1) Touch the icon **"NEW MIND MAP"(fig. MM1)**.

(2) The screen **fig. MM2** will open: select if the end of cooking should be determined based on the time (the horizontal **axis (X)** shows the symbol) or based on the core probe temperature (the horizontal **axis (X)** shows the symbol).

(3) Use the stylusto draw the required curve.

The symbol enables access to curve settings at over 30 minutes.

Changes to the curve

(4) To **change** a tract of curve already drawn, click on the curve with the stylus and, while continuing to hold it, move it to modify the curve as desired.

(5) To **delete** tracts of a curve already drawn, repeatedly click on the red "**X**" on the left.

Inserting guide rulers

(6) To **insert rulers** that help view the values, click on the **horizontal (X)** axis in the desired position in the example 5 and 15 minutes: the numbers will be highlighted in grey and a green ruler will appear. The numbers above the rulers(in the example "10") show the difference in minutes compared to the previous ruler (15 minus 5 minutes = 10).

(7) To **delete rulers**, with the numbers highlighted in grey, repeatedly click on the red "**X**" on the left: the rulers will be deleted in the order they were created.



fig. MM1



fig. MM2



fig. MM3



fig. MM4



fig. MM5



fig. MM6

Zoom

(8) To **enlarge** an interval, click on the Y vertical axis in the desired position (in the example an interval between 170 and 200°).

(9) Click in the Y vertical axis again or on the symbol in the bottom left corner to return to the normal mode.

Next parameters and pre-heating setting

(10) Touch another icon to set the next parameters, steam extraction or input and airflow speed.

(11) Trace a new curve to set the selected parameter:

Steam extraction or input: the extraction values are displayed in RED, while the input values are displayed in BLUE(in the example, at 15 minutes the steam extraction is set to 40%).

Airflow speed (from speed 1 - minimum to speed 4 - maximum): the pulsating fan speed is shown with a dashed line (values below zero), the normal speed is shown with a continuous line (values above zero). The thickness of the line also indicates the speed (thin line shows a slow speed and thick line shows a high speed).

(12) If the recipe calls for a pre-heating cycle, press the specific button on the left ( ) and set the desired temperature.

(13) The "HOLD" button at the bottom right ( ) enables to continuously operate the oven.

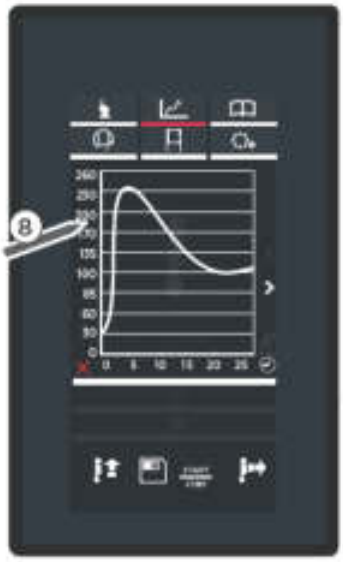

fig. MM7



fig. MM8



fig. MM9

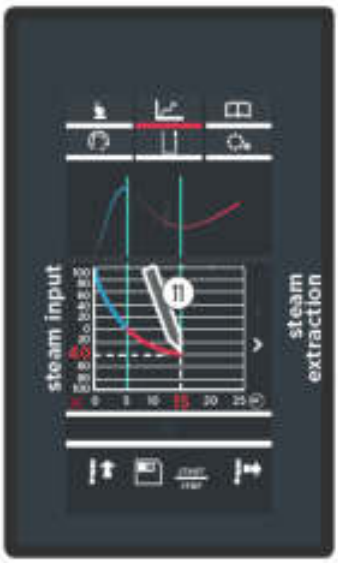

fig. MM10: steam extraction/input/

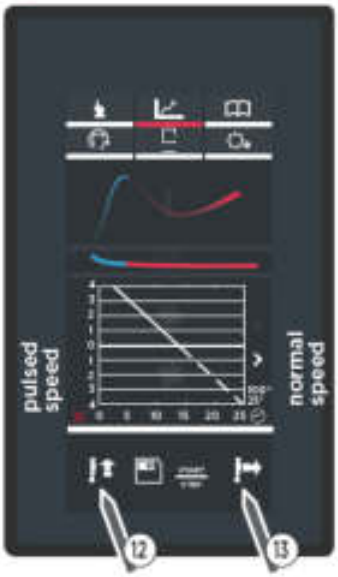

fig. MM11: airflow speed, pre-heating and HOLD (continuous cooking)

Save the set curves MIND MAPS

Saving the set curves is optional but recommended in order to use the recipe later, at any time, without having to reset it each time.

After having plotted parameter curves (temperature/duration, steam extraction/ input and airflow speed), hold down the **"SAVE"** button (①) - **fig. MM14**).

The curves will be saved after plotting them, it is not possible to save them after having started the recipe or at its stop.

By touching the various symbols on the display the user can:

- ② ③ assign a recipe name and confirm pressing **"OK"** (**seefig. MM15A -** PIZZA);
- ④ ⑤ assign a photo to the recipe, selecting one from those available **(see fig. MM16A and fig. MM16B)**;

At the bottom of the screen, the arrows < and > are used to scroll through the groups of photos available (the photos are divided into categories - desserts, pizza, baked goods, etc...).

- ⑥ ⑦ assign a tray to the recipe, selecting one from those available **(see fig. MM17A and fig. MM17B)**.

After having assigned the recipe name, photo and tray, hold down the **"SAVE"** button (⑧ - **fig. MM17A**): the screen **fig. MM18** will appear .

⑨ Touch the position where the recipe is to be saved (e.g. the location under the "COOKIES" recipe): the cooking cycle will be saved with the entered settings (**fig. MM19**) **.**

If a slot already occupied is selected, the program automatically saves the recipe in the first slot available.

At the bottom of the screen, the arrows < and > are used to scroll through the 16 positions available in the group,, while arrows ∨ and ∧ scroll through the 16 groups available.

⑩ Touching one of the cooking cycles listed **(fig. MM19)**, will open the screen **fig. MM20** that enables the user to:

- Ⓐ view/modify the saved cooking cycle;
- Ⓑ duplicate the cooking cycle (to create one with similar parameters);
- Ⓒ delete a saved cooking cycle: in this case the system requests confirmation before permanently deleting the item **(fig. MM21)**
- Ⓓ start the cooking cycle by pressing the **"START/STOP"** button.



fig. MM14



fig. MM15A



fig. MM15B



fig. MM16A



fig. MM16B



fig. MM17A



fig. MM17B



fig. MM18



fig. MM19


Recipes of GROUP 2



fig. MM20


fig. MM21


"PIZZA" recipe deleted

Start the recently set MIND MAPS cooking cycle

The **"START/STOP"** button immediately starts the cooking cycle with the previously set parameters **(see fig. MM21A-fig. MM21B)**.

If the cooking cycle includes a PRE-HEATING step, the screen **fig. MM22A** appears indicating:

- (1) the current oven cavity temperature;
- (2) the set pre-heating temperature;
- (3) the option to "skip" pre-heating;
- (4) the option of viewing/modifying the parameters in the subsequent STEPS.

When the set temperature is reached, a buzzer notifies the user of the end of the pre-heating STEP* and an icon appears requesting the user to place the products in the oven **(see fig. MM22B)**.

After this operation, STEP 1 is started up automatically as soon as the oven door is closed.

* To mute the buzzer, touch the icon at the top right:
green = buzzer ON
white = buzzer OFF

If you want to discontinue the cooking in progress, hold down the **"START/STOP"** button (approximately 4-5 seconds) until the **"HOME"** screen appears.





fig.MM21A: not saved recipe

fig.MM21B: not saved recipe

fig. MM21A fig. MM21B

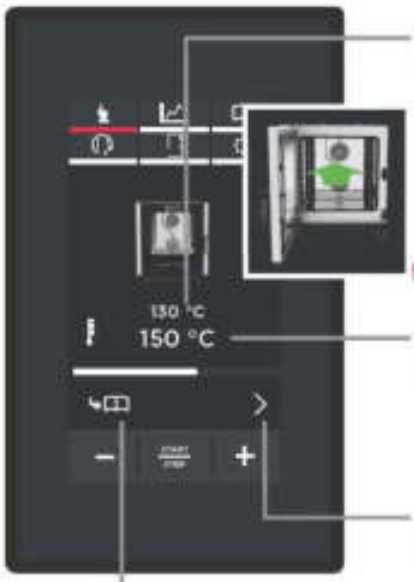

(1) Current oven cavity temperature

fig. MM22B

(2) Set pre-heating temperature

(4) Access to the parameters

Option to "skip" pre-heating" even if previously set (3)

fig. MM22A

During the cooking cycle the screen **fig. MM23** appears: clicking on every part (A), (B), (C) it is possible to view the desired curve in detail (temperature-duration, etc...).



fig. MM23

Programs Menu

Enables access to a cooking cycle list previously stored **(MY PROGRAMS)** or the creation and storage of new recipes **(NEW PROGRAMS)**.

1 MY PROGRAMS

In this section the user can recall a previously saved cooking cycle by using the **"SET MENU"**.

see chap. "Save the set recipe" on page 11

To access the list of saved cooking cycles, touch the icon **"PROGRAMS" (fig. P1)** followed by the icon **"MY PROGRAMS"** (2) **-fig. P2)**: this opens a list of all previously saved cooking cycles **(fig. P3)**.

At the bottom of the screen, the arrows < and > are used to scroll through the various cooking cycles saved in the group, while arrows ∨ and ∧ scroll through the 16 groups available.

(3) Touching one of the cooking cycles listed **(fig. P3)**, will open the screen **fig. P4** that enables the user to:

- (A) view/modify the saved cooking cycle;
- (B) duplicate the cooking cycle (to create one with similar parameters);
- (C) delete a saved cooking cycle: in this case the system requests confirmation before permanently deleting the item **(fig. P5)**.
- (D) start the cooking cycle using the **"START/STOP"** button.



fig. P1



fig. P2



fig. P3



fig. P4


fig. P5


fig. P6
"MERINGUES" recipe deleted

2 MY MIND.MAPS

In this section the user can recall a previously saved cooking cycle by using the **"MIND.MAPS MENU"**.

see chap. MIND.Maps Menu on page. 15

To access the list of saved cooking cycles, touch the **"PROGRAMS"** icon **(fig. P6)** followed by the **"MY.MIND.MAPS"** icon **(fig. P7)**: this opens a list of all previously saved cooking cycles **(fig. P8)**.

At the bottom of the screen, the arrows < and > are used to scroll through the various cooking cycles saved in the group, while arrows ∨ and ∧ scroll through the 16 groups available.



fig. P6



fig. P7



fig. P8

Unox.Care Menu

Enables access to the washing list, management of the Unox.Pure filter and oven maintenance.

1 ROTOR.KLEAN

In this section it is possible to start one of the following washing or rinse programs:

WASHING CYCLE	RUN TIME	USE
H2O	00:06	cold rinse
QUICK	00:32	oven cavity only slightly dirty
SHORT	00:40	cooking cavity slightly dirty
MEDIUM	01:00	cooking cavity averagely dirty
SHORT	01:40	oven cavity very dirty

PUMP LOADING/DETERGENT LOADING:this program must be engaged only after first oven use or after every detergent tank replacement; it lasts about 25 seconds and it loads the detergent from the tank white suction tube. After pump loading, you MUST promptly start a washing circle.

(2) Touch the name of the program needed.

(3) A screen appears "**CONSUMPTION (CONSUMPTION DATA)**", and provides the consumption data regarding the selected washing circle:
- water consumption (in litres);
- electrical consumption (in kW/h)
- UNOX.Det&Rinse Plus consumption (detergent)

(4) Touch the **"START/STOP" BUTTON:** the washing cycle starts. The display shows the time remaining until the end of the washing cycle (in the example, **fig. L1** 1 minute and 25 seconds remains).

The colour of the clock indicates:

- **RED**: washing program under way.
- **YELLOW**: less than 1 minute until the selected washing program finishes
- **GREEN**: program has finished, it automatically returns to the **"HOME"** page.

To **prematurely stop** a washing cycle under way, press the **"STOP"** key: a quick rinse cycle will automatically start lasting approximately 3 minutes to eliminate any trace of residual detergent from the oven cavity.





fig. L1



A screen alerts you to NOT open the door during washing.

RISK OF INJURY TO EYES, MUCOUS MEMBRANES AND SKIN CAUSED BY CONTACT WITH THE CLEANING CHEMICALS USED!!

CAUTION REGARDING WASHING CYCLES

The ovens come equipped with one/two rotor(s) for cleaning the oven cavity.

Before starting a washing cycle, check that trays are NOT left in the oven cavity: washing is ineffective and the an alarm will show: in this case, remove the trays, disconnect and then restore power to the oven and immediately start a new wash cycle.

Do NOT open the oven door during cleaning to avoid risks of injuries caused by fan movement, hot steam and aggressive action of chemical detergents used.

For ovens with a trolley, run the washing cycle with the trolley inside the oven cavity, without any trays and lock it using the front wheel brakes.

REFILLING DETERGENT TANK

Filling can only be done with the 1-litre bottles of the **UNOX.Det&Rinse Plus** detergent.

To refill the detergent:

1. Wear gloves to avoid direct contact of hands with detergent.
2. Take out the tank from under the oven until you hear a "click".
3. Open the lid of the tank.
4. Open the cap of the UNOX 1-litre detergent bottle **without removing/piercing the protective film!**
5. Turn the bottle upside down and screw it on the tank (by screwing the bottle, a pin in the tank breaks the protective film, which allows the detergent to come out).
6. Once the bottle is emptied, unscrew it to remove it; avoid dripping

The detergent must not come into contact with skin, eyes or mucous membranes. In case of contact with the detergent, follow the instructions found on the safety data sheet.

7. Repeat the process up to the maximum level allowed indicated on the front of the tank. (Maximum capacity of the tank if 4 litres = 4 bottles)
8. Remove the bottle.
9. Replace the tank under the oven until it stops.
10. Dispose of the gloves, taking care not to touch the areas spoiled with detergent.

Never touch the detergent with bare hands!



DO NOT TAMPER WITH THE TANK AND ITS CONNECTIONS TO THE OVEN FOR ANY REASON AS THIS COULD CAUSE A RISK OF INJURY OR DEATH

2 UNOX.PURE

(1) Display of litres remaining

Thanks to an internal litre counter (which has to be reset each time the filter is changed), the user can find out at any given moment how many litres of inlet water remain until the filter will next need changing.

(2) Water hardness

The screen enables to set the hardness of the water within a range of 3 °dH to 10 °dH (German degrees).

(3) Replace the filter

After having replaced the filter, the litre counter must be reset so that it can start counting from zero again. To carry out this operation, enter the PIN code identified on the kit box.



3 UNOX.PURE-RO

① View the residual litres (Remaining volume)

Thanks to an internal litre counter (that has to be reset each time the filter is changed), it is possible to learn about the inlet water litres remaining until the filter will next need changing (in the example 7083 residual litres until the replacement of the filter).

② Activate Counter

The parameter must be set to "ON" for the OSMOSIS system to function properly (the default is "OFF"). If for any reason the reverse osmosis system is removed from the oven, or while waiting for a repair, reset it to "OFF".

③ Resetting the Counter

After having replaced the filter, the litre counter must be reset so that it can start counting from zero again. To do this you need to access the screen and confirm (DELETE).

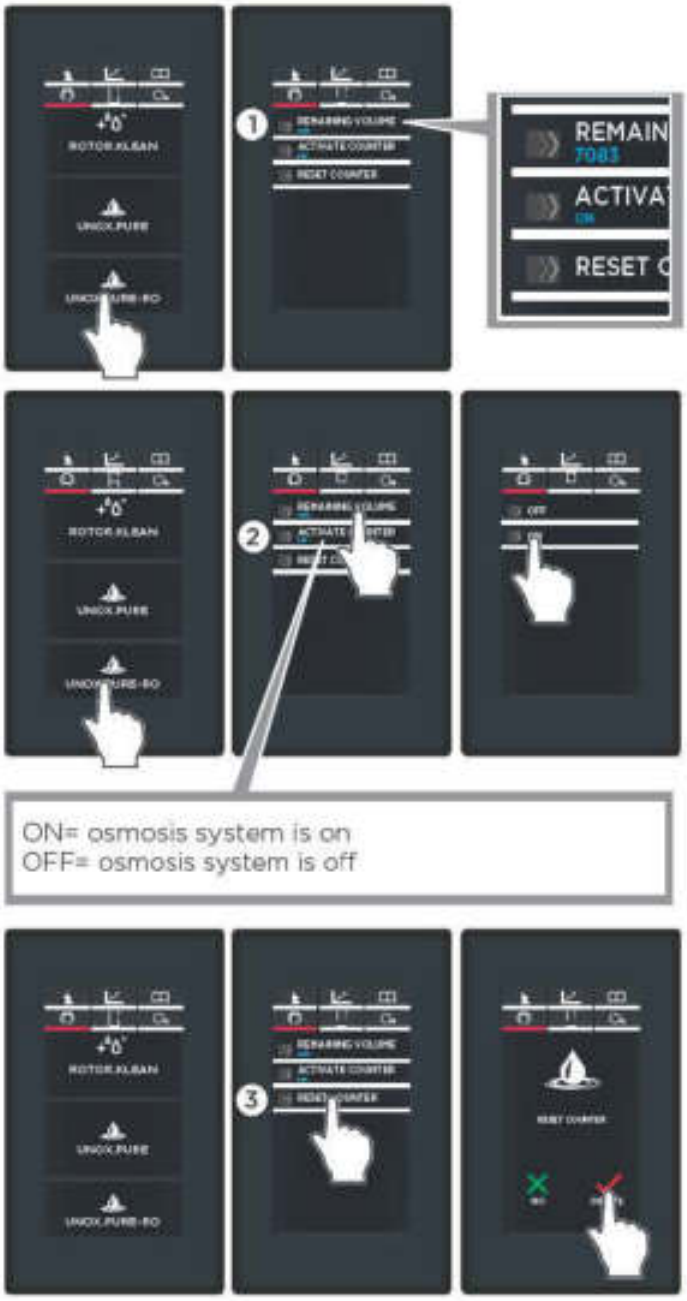

Settings Menu

This menu enables the user to set the oven parameters.

1 USER SETTINGS

After entering the password "**4456**", the menu lets the user access the following submenus:

LANGUAGE: the user can select the control panel language selecting from the languages available.

DATE AND TIME: the user can modify the oven DATE AND TIME (clock) settings.

UNIT OF MEASUREMENT: the user can select the unit of measurement for temperature and volume (°C-°F, litres - gallons)

NETWORK: the user can enable or disable oven control the network remote access and then configure parameters

EXPORT TO USB: with the use of a USB key, the user can export cooking cycle programs created in the oven.

IMPORT TO USB: with the use of a USB key, the user can load previously created cooking programs to a computer.

The export/import operations using a USB key should be performed using the device supplied: the key also contains the firmware of the oven and the complete instruction manual.



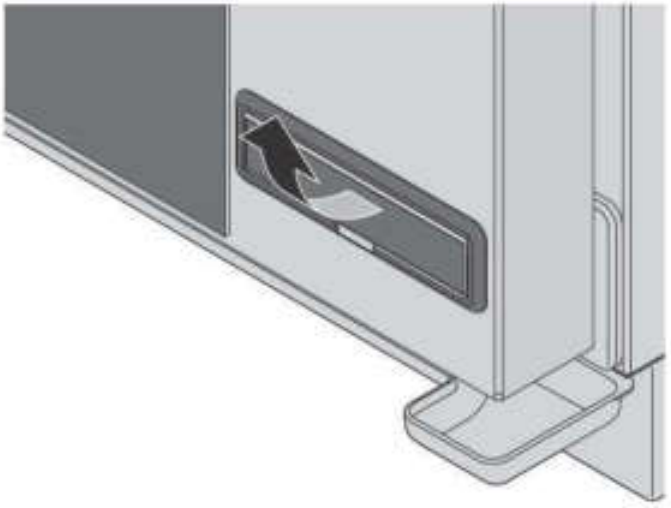

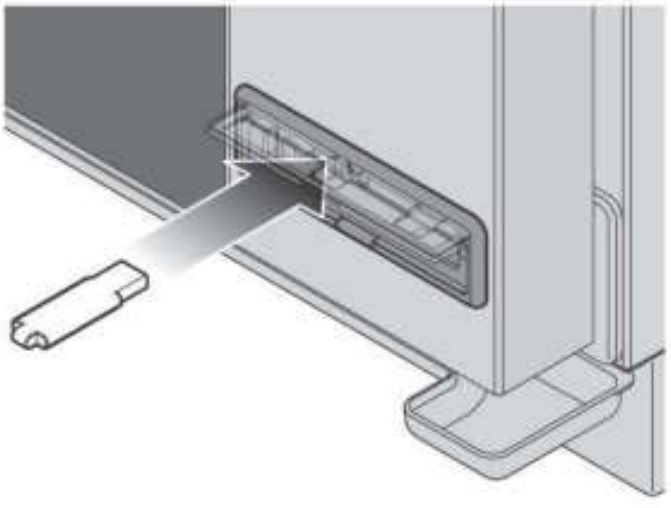

Oven-user interface

The ovens show alarm/warning messages relative to the oven or installed accessories on the screen.
The warning messages (WARNING) signal malfunctions that nevertheless allow the apoliance and accessories to operate, though with a restricted set of functions.
The alarm messages (ALARM) identify situations that fail to allow any appliance/accessories operation whatsoever, and therefore must be put into STOP mode.
If the alarm messages strictly refer to the connected accessories (prover or hoods), the oven can still be used.

AF - OVEN ALARMS			
Display	**Description**	**Effect**	**Problem solution**
AF01	Motor thermal alarm	The oven stops any operating cycle and blocks any screen display configuration	Contact the Customer Assistance Service
AF02	Safety thermostat alarm		
AF03	Oven cavity alarm		
AF04	Communications failure alarm		
AL20	Hood thermostat alarm	The oven does not enable to start the program until the temperatures return within regulatory limits and until the user presses the "reset hood" button	Wait for the temperatures to cool and then press the reset button; if the problem persists, contact the Customer Assistance Service
AL023*	No gas supply	The oven stops any operating cycle and blocks any screen display configuration	Contact the Customer Assistance Service
AF023**	Trolley alarm	The oven does not enable the programs to start with the exception of preheating	Correctly position the trolley inside the oven chamber, if the problem persists even after the corrective action, contact the Customer Assistance Service

*** only for gas ovens**
**** only for ovens with trolleys**

WF - OVEN ALARM

Display	Description	Effect	Problem solution
WI 01	Warning: cavity 1 probe (on the rear)	The oven continues to run using the cavity 2 probe, therefore temperature adjustments may be less accurate	Contact the Customer Assistance Service
WI 02	Warning: cavity 2 probe (on the front)	The oven continues to run	
WI 03	Warning: core probe	The oven continues to run but the core probe cannot be used for cooking cycles	
WF04	Warning: motor tachometer	The oven will continue to operate, but the humidity sensing system is disabled	
WI 06	Warning: gas temperature board		
WF10	Warning Sous Vide (vacuum cooking) board temperature	The oven continues to run but the external Sous Vide (vacuum cooking) probe cannot be used	
WI 13	Warning Sous Vide (vacuum cooking) probe		
WI 15	Warning: communication failure with the Sous Vide (vacuum cooking) board		
WI 16	Warning: lack of water or LL water valve	The oven will continue to operate but washing may not be effective	Check the reason for the lack of water, if the problem persists even after the corrective action contact the Customer Assistance Service
WF17	Warning: multipoint probe on 1 or more measuring points (1 to 3)	The oven continues to run but the core temperature measurement may be inaccurate	
WF18	Warning: rotation of the POLLO valve	It is not possible to switch from chicken cooking to a washing cycle and/or vice versa	
WF19	Lack of detergent in the tank below the oven	The washing cycle stops, the system enters the forced rinsing	Load the detergent, if the problem persists even after the corrective action, contact the Customer Assistance Service
WF20	Lack of water to the FG 1 impeller valve	The washing programs start regularly but, due to the malfunctioning of the impeller, the cleaning is not optimal	Contact the Customer Assistance Service
WF25	Lack of water to the FL 2 valve	The washing programs start regularly but due to the problem back side of the sheet metal fan cover will not be washed	Contact the Customer Assistance Service
WI 26	Lack of water to the FG 2 impeller valve	The washing programs start regularly but, due to the malfunctioning of the impeller, the cleaning is not optimal	
WI 27	Lack of water to the LL1 valve	no type of washing can be done	Check the reason for the lack of water, if the problem persists even after the corrective action contact the Customer Assistance Service
WI 28	Warning: control P.C.B. temperature	The oven continues to run	Contact the Customer Assistance Service
WF29	Warning: GAS smoke temperature	The oven continues to operate but it is possible that its performance is low	
WF30	Interface error with the smoke board	The oven continues to operate but it is possible that its performance is low	Contact the Customer Assistance Service
WI 31	High smoke board temperature	The oven continues to run	

WC - HOOD WARNING

Display	Description	Effect	Problem solution
WC01	Smoke collector 1 failure	Smoke hood solenoid valve does not open when a smoke temperature probe is missing	Contact the Customer Assistance Service
WC02	Board temperature error	The hood continues to run	
WC05	Inlet fumes too hot	The hood continues to run	
WC06	No power supply	Motor and smoke hood disengaged	Check the power cord of the hood, if the problem persists even after the corrective action, contact the Customer Assistance Service
WC07	Communication failure	Motor and smoke hood disengaged	

AL - PROVER ALARM

Display	Description	Effect	Problem solution
AL01	Cavity probe alarm	The prover stops any operating cycle and stops any successive display screen settings	Contact the Customer Assistance Service
AL02	Communications failure alarm		
AL03	No 230 V power supply to the prover board		Check the power cord of the prover, if the problem persists even after the corrective action, contact the Customer Assistance Service

WL - PROVER WARNING

Display	Description	Effect	Problem solution
WL01	Error humidity probe	The prover continues to run but the automatic humidity regulation feature cannot be engaged	Contact the Customer Assistance Service
WL02	Board temperature error	The prover continues to run	
WL03	Compensation compartment probe error		

AM - MAINTAINER ALARMS (SlowTop)

Display	Description	Effect	Problem solution
AM01	Cavity probe alarm	The maintainer stops all operating cycles and blocks any successive display screen configuration	Contact the Customer Assistance Service
AM02	Communications failure alarm		
AM03	Safety thermostat alarm		
AM04	Motor thermal alarm		
AM05	Motor tachometer alarm		

WM - MAINTAINER WARNING (SlowTop)

Display	Description	Effect	Problem solution
WM02	Error of compensation board	The maintainer continues to run	Contact the Customer Assistance Service
WM03	Error core probe	The maintainer continues to run but core probe processes cannot be activated	

Cleaning

Any routine maintenance procedure must be performed:
- after having disconnected the power, water and gas supplies to the appliance (ONLY FOR GAS OVENS);
- after having put on the proper personal protection equipment (i.e. gloves, etc...).

Clean the oven cavity daily to maintain proper levels of hygiene and to keep the stainless steel inside the oven cavity from getting ruined or corroding. Clean the oven daily even if the appliance is used exclusively with humid heat (steam).
When cleaning any component or accessory NEVER use:
- abrasive or powder detergents;
- aggressive or corrosive detergents (i.e. hydrochloric/muriatic or sulphuric acid). Caution! Never use these substances also when cleaning the appliance substructure and floors;
- abrasive or sharp tools (i.e. abrasive sponges, scrapers, steel bristled brushes, etc...);
- water spray.

EXTERNAL STEEL STRUCTURES, OVEN CAVITY SEAL, CORE PROBE

Wait for the surfaces to cool off.
Use only a soft cleaning cloth dampened with a little soap and water. Rinse and dry completely.
In alternative, only use detergents recommended by UNOX; other products may cause damage thereby invalidating the guarantee. Read the instructions provided by the detergent producer for their use.



INTERNAL PART OF THE OVEN CAVITY

Failure to clean the oven cavity daily can make the accumulated fatty substances or food residues inside the cavity catch fire - danger of fire!
Use the washing cycle programs to clean the oven cavity.
For further details, see chap. ROTOR. KLEAN on page 20

PLASTIC SURFACES AND CONTROL PANELS

Use only a very soft cleaning cloth and a small amount of detergent for cleaning delicate surfaces.

INSIDE AND OUTSIDE OVEN DOOR WINDOW GLASS

Wait for the windows to cool off.
Use only a soft cleaning cloth dampened with a little water, soap or detergent specifically designed for glass.
Rinse and dry completely.

After-sales assistance

In case of any malfunctions, disconnect the appliance from its power and water supply. Consult the solutions proposed in the table.



If the solution is not listed in the table, contact a UNOX authorized technical customer service. Provide the following information:
- the date of purchase;
- the appliance data on the serial plate;
- any warning messages that appear on the display.

Manufacturer's information:
UNOX S.p.A.
Via Majorana, 22
35010 Cadoneghe (PD) Italy
Tel +39 049 86.57.511 - Fax +39 049 86.57.555
info@unox.com www.unox.com

Malfunction	Possible cause	Possible solution	Problem solution
The oven is completely switched off.	- No mains power. - Appliance out of order.	Make sure the appliance is connected to the electricity mains.	Contact the Customer Assistance Service.
No steam is produced inside the oven cavity.	- Water inlet closed. - Appliance plumbed into the water mains or the tank incorrectly. - No water in the tank (if water is taken from the tank). - Water supply filter clogged with impurities.	- Open water inlet. - Make sure the appliance is plumbed into the water mains or the tank correctly. - Fill the tank with water. - Clean the filter.	Contact the Customer Assistance Service.
After the time has been set and the START / STOP button pressed, the oven does not start.	Door open or not shut properly.	Make sure the door is shut.	Contact the Customer Assistance Service.
Water escapes from the seal while the door is shut.	- Seal is filthy. - Seal is damaged. - The handle mechanism is loose.	- Clean the seal using a damp cloth. - Contact a specialised technician to request repairs.	Contact the Customer Assistance Service.

Inactivity

Follow the precautions below during inactivity:
- disconnect the power, water and gas supplies to the appliance (ONLY FOR GAS OVENS);
- we recommend rubbing a soft cloth lightly doused with mineral oil on all stainless steel surfaces;
- keep the appliance door slightly ajar.
- At first reuse:
clean the appliance and its accessories thoroughly (see **Cleaning** chapter on page **27**);
- restore the power, water and gas supplies to the appliance (ONLY FOR GAS OVENS);
- inspect the appliance before using it;
- switch on the appliance at minimum temperature for 50 minutes without any food inside of it.

To ensure that the appliance is in perfect use and in a safe condition, maintenance and inspections should be performed yearly by an authorised customer agent service.

End of life disposal

Pursuant to article 13 of Legislative Decree 49 of 2014 "Implementation of the WEEE Directive 2012/19/EU on electrical and electronic equipment waste",

The barred symbol of the rubbish bin specifies that the product was placed on the market after August 13, 2005 and that at the end of its useful life it should not be treated as other waste, but must be collected separately.

All appliances are made with recyclable metallic materials (stainless steel, iron, aluminium, galvanized steel, copper, etc.) in percentages higher than 90% by weight.

Make the appliance ready for disposal by removing the power cable and any compartment or cavity closure latch (where present).

At the end of its useful life, this product must be managed in a way that reduces the negative impacts on the environment and improves the effectiveness of use of resources by applying the "the polluter pays", prevention, preparation for reuse, recycling and recovery principles. Please remember that illegal or incorrect disposal of the product leads to the application of the penalties provided by current legal provisions.

Information on disposal in Italy

In Italy, WEEE appliances must be delivered:
- to Collection Centres (also known as ecological islands or ecological platforms)
- to the dealer from whom new appliances are purchased, who is required to collect them free of charge ("one against one" collection);

Information on disposal in countries of the European Union

The EU Directive on WEEE appliances has been implemented differently by each country. Therefore, if you want to dispose of this appliance, we recommend you contact your local authorities or dealer to get information on the correct disposal method.

Certification

EU declaration of conformity for electrical and gas appliances

Manufacturer: UNOX S.p.A.
Address: Via Majorana, 22 - 35010 Cadoneghe, Padova, Italy
Declares, under its own responsibility, that the product
CHEFTOP-BAKERTOP MIND.Maps™
For electric and gas ovens
complies with Machinery Directive 2006/42/EC that is compliant with the following standards:
EN 60335-1: 2014 + A11:2014
EN 60335-2-42: 2003 + A1: 2008 + A11:2012
EN62233: 2008
EN 60335-2-102:2006 + A1:2010
complies with EM Compatibility Directive 2014/30/EC and is built in compliance with the following standards:
EN 55014-1: 2006 + A1: 2009 + A2: 2011
EN 55014-2: 1997 + A1: 2001 + A2: 2008
EN 61000-3-2: 2006 + A1: 2009 + A2: 2009
EN 61000-3-3: 2008
EN 61000-3-11: 2000
EN 61000-3-12: 2011
EN 61000-6-2: 2005
EN 61000-6-3: 2007

Only for gas ovens
complies with Directive 2009/142/EC and is built in compliance with the following standards:
EN 203-1: 2014 / EN 203-2-2: 2006

Guarantee

Installation of the UNOX product must be performed by an Authorized UNOX Assistance Service. The installation date and appliance model must be documented by the end purchaser, by means of written confirmation or an installation invoice issued by the dealer or the Authorised UNOX Customer Assistance Service, otherwise this guarantee will not be valid;
The UNOX guarantee covers all malfunctions objectively linked to production defects. The guarantee excludes damage due to transport, poor product storage or maintenance or incorrect product use. Also excluded is damage due to installation not conforming to the technical specifications provided by Unox and linked to the environment of use, such as, for example, unclean and aggressive water supply, low quality gas supply, or electrical supply failing to provide nominal voltage and power ratings.
The guarantee also excludes any damage due to power surges or tampering by unauthorized or incompetent persons. The guarantee is also invalidated for damage to the appliance by lime scale deposits. In addition, the guarantee does not cover consumables, such as: seals, light bulbs, glass panels, decorative parts and parts consumed during use.
Guarantee rights will also be invalidated in the event of damage arising as a result of incorrect installation, or installation which has not been carried out by an Authorised Customer Assistance Service.

LI2495A1D00-LDI-01 - Printed: 07-2016
Subject to technical changes.



UNOX S.p.A.
Via Majorana, 22 - 35010 - Cadoneghe (PD) - Italy
Tel. +39 049 86.57.511 - Fax. +39 049 86.57.555
info@unox.com www.unox.com