ELECTRIC OVEN

USE AND INSTRUCTION MANUAL
MOD. EKF 1111 UD – EKF 1064 UD – EKF 1016 UD

rev. 1

TECNOEKA S.r.l.
Via Marco Polo, n.11 - 35010 Borgoricco (Padova) Italy
Tel. +39.049.9300344 – +39.049.5791479 Fax 049.5794387
www.tecnoeka.com E-mail: info@tecnoeka.com

X:\Sgq\PRODOTTI\Fam. 1 - FORNI\FORNO ELETTRICO\LEka\MANUALI D'USO - Forno Elettrico 40 60 90 - LEka\Lingua Inglese\NUOVA GAMMA EF\Instruction manual EKF 1111 UD - EKF 1064 UD (_002) - EKF 1016 UD - GB - rev. 1.doc

TECNOEKA SRL
VIA MARCO POLO, 11 - 35010 BORGORICCO - PADOVA - ITALY
TEL. +39 049 5791479 +39 049 9300344 - FAX +39 049 5794387
E-MAIL: INFO@TECNOEKA.COM - WWW.TECNOEKA.COM - WWW.TECNOEKA.RU
COD. FISC. - P.IVA 00747580280 - REA N° 133205 - CAP. SOC. EURO 119.000,00 I.V.

CE DECLARATION OF CONFORMITY

Annexed document II A, of directive 2006/42/EC

Manufacturer's name	TECNOEKA Srl
Manufacturer's address	Via Marco Polo, 11 - 35010 Borgoricco (PD)
Manager's name of technical file	Minotto Lorenzo
Manager's address of technical file	Via Marco Polo, 11 - 35010 Borgoricco (PD)
Type of product	Electronic oven
Purpose of the product	Cooking food
Model	EKF 1111 UD.... – EKF 1064 UD.... – EKF 1016 UD....

TECNOEKA Srl declares that the mentioned above products meet the following safety regulations:
Low voltage directive 2006/95/CE
Electromagnetic compatibility Directive 2004/108/CE.

TECNOEKA Srl declares that the mentioned above products meet the following harmonised standards:
CEI EN 60335-1 ; CEI EN 60335-2-42
CEI EN 55014-1 ; CEI EN 61000-3-2 ; CEI EN 61000-3-3
CEI EN 62233

TECNOEKA Srl declares that the mentioned above products meet the following directives:
Machine Directive 2006/42/CE;
Directive on the general safety of products 2001/95/CE;
Directive on the restriction in the use of dangerous substances in electrical and electronic appliances 2011/65/CE;
Directive on waste from electrical and electronic appliances 2002/96/CE (RAEE).

TECNOEKA Srl declares that the mentioned above products meet the
CE 1907/2006 (REACH) Regulation

Borgoricco, 06/10/2014.

Signature of a Representative of the Board of directors
(CRISTINA LORA)

Index

1. Technical service
2. General warnings
3. Technical specifications
4. Instructions for the installer
5. Use instructions (for the user)
6. Residual risks (for the user)
7. How to use the control panel
8. Oven cooking
9. Cleaning
10. Maintenance
11. Technical service
12. Informations to the consumers
13. Wiring layout
14. The Warranty

1. Technical service

A technical check-up once or twice a year helps prolong the life of the appliance and guarantees better operation.
Make sure that assistance is carried out solely and exclusively by qualified personnel.
For any spare parts orders or for any information about the appliance, always mention the serial number and model (data indicated on the "technical data" plate at the rear of the oven).

2. General warnings

Very important!: keep this instruction book together with the appliance for future consultation.
These warnings were drafted for your safety and for that of others. Please read them carefully before installing or using the appliance:

- If, on receipt of the goods, the **packaging** is damaged, write the following on the delivery note: "**I REVERSE THE RIGHT TO CONTROL THE GOODS**", specify the damage and get the driver to sign in acceptance; send a claim in writing to the seller within 4 calendar days from the date of receipt. No claim shall be accepted after such period.
- The appliance is intended for professional use and must be utilised by qualified personnel trained to use it.
- Any modification which may be necessary on the electrical system to enable installation of the appliance, must be carried out solely by competent personnel.
- It is dangerous to modify or attempt to modify the characteristics of this appliance.
- Never clean the appliance with direct water jets, because, if any water enters, it could limit the machine's safety .
- Before doing any maintenance or cleaning jobs, disconnect the appliance from the electrical mains and allow it to cool.
- Do not attempt to carry out the periodic controls or any repairs by yourself. Contact the nearest Service Centre and use only original spare parts.

N.B.: Improper or incorrect use and failure to observe the installation instructions shall release the manufacture from all responsibility. In this connection, the directives in the "POSITIONING" paragraph must be strictly observed.

3. Technical specifications

Dimensions of appliance LxDxH(mm)	935x930x1150
Weight (Kg)	129,4
Convection heating element (kW)	5
Grill heating-element (kW)	/
Max. absorbed power (kW)	16
Power supply voltage (V)	AC 400V 3N (50Hz)
Power cable diameter	5x2,5 mm^2
Type of cable	H07RN-F
Connecting electric cable	Tipo Y
Class	I
Degree of protection against humidity	IPX3
Water pressure (kPa)	100-200

The noise level of the appliance in operation is below 70 dB (A).
The "technical data" plate is positioned on the rear panel of the appliance.

4. Instructions for the installer

The following instructions are aimed at the qualified installer, to ensure that he carries out the installation, adjustment and maintenance operations as correctly as possible and according to current legal regulations. Any operation must be performed with electrical power cut to the appliance. Before using the appliance, carefully remove the special adhesive film protecting the parts in stainless steel. Do not leave any glue residues on the surfaces. If necessary, remove them at once, with an appropriate solvent.

Positioning - Check the place where the appliance will be installed to ensure that the passages (doors and corridors) are wide enough (the appliance measurements are given in Fig. 1). The appliance must be positioned in a perfectly horizontal manner on a table (preferably under a suction hood) or other similar surface, **never on the floor** (The height of the table/support must minim. 60cm from the floor). If the oven is positioned by hand, as it weighs 155 kg, it must be lifted by at least four people. The appliance must be held on both sides at the bottom, near to the 4 feet (it is easier to lift if all 4 people synchronise their movements).
For easier access and to allow the air to circulate freely around the appliance, leave at least 50 cm between the left side and the wall (or other appliances), and at least 10 cm between the back and the wall and the right side and the wall (see Fig. 1). The natural ventilation that is needed to ensure efficient working for the oven is through the openings on the walls of the outer covering (left side and back). Consequently, it is strictly forbidden to obstruct these aeration openings, even partially and even for short periods. **Failure to observe this specific prohibition, shall release the manufacturer from all liability for the appliance and shall immediately cancel any guarantee rights for the said appliance,** because its constructive conformity has been voluntarily compromised. If the appliance is installed near walls, tops, shelves or other similar items, they must not be inflammable or sensitive to heat, otherwise they must be protected by a suitable fireproof covering. In all cases, all fire prevention standards must be strictly adhered to. This appliance cannot be built in nor positioned in series with others.

Electrical connection - The connection to the main supply must be in conformity with current legislation in force. Before making the electrical connections, make sure that:

- the voltage and frequency values of the power supply system match the values on the "technical data" plate affixed on the rear of appliance;
- the pressure relief valve and the system must be able to support the appliance load (see the data on the technical rating plate;
- **the power supply system must be equipped with an efficient earth connection according to current regulations;**
- with direct-to-mains connection, a multi-pole switch must be installed between the appliance and the mains with a minimum opening between the contacts of the overvoltage category III (4000 V), of a sufficient size for the load and conforming to current regulations (e.g. an automatic magnetothermal switch);
- the multi-pole switch that is used for the connection must be easily accessible once the appliance is installed;
- **the yellow/green earth wire must not be disconnected by the switch;**
- the supply voltage must not differ from the rated voltage level by ±10% when the appliance is operating;
- make sure that after inserting the power supply cord into the terminal block it does not come into contact with any of the cooking range's hot parts.
- **if the supply cable is damaged then it must be replaced by the manufacturer or by your technical support or by a qualified person to avoid any risk.**

Connection to the water mains - The oven must be supplied with softened drinking water with a hardness value of 0.5 to 3°F (It is obligatory to use water softener to reduce the formation of scaling inside the cooking chamber). The water pressure must be in the range of 100 to 200 kPa (1.0 – 2.0 bar). If the water pressure exceeds 2.0 bar, install a pressure reducer device upstream. If the pressure is below 1.0 bar, use a pressure pump to increase the level.
The connection to the water supply is done using the ¾" threaded solenoid valve on the back (at the bottom) of the appliance (see fig. 1), fitting a mechanical filter with a cut-off cock (before connecting the filter, allow a certain amount of water to flow out in order to remove any waste from the pipe).

Water drainage - A drain pipe (see Fig. 1) comes out from the rear of the appliance, to drain the oven cavity. This pipe must be connected up to a pipe made to resist steam temperatures (90°C-100°C) with an internal diameter of 30 mm (DN 30). To prevent choking, it is best to use a rigid pipe and make sure there are no "elbow" bends anywhere along the drain line.

Furthermore, the drain line must slope down (minimum slope 5%) along its full length (the length in question is from the appliance's drain pipe to the drain point and must not exceed 2 metres). The drain line must run into an open floor drain (Fig.2). In addition, there must be a free air gap of at least 25 mm (distance between the drain line coming from the appliance and the funnel on the drain standpipe). Whatever the case, in order to comply with current hygiene standards, the line connected to the appliance's drain pipe must not come into direct contact with the drain point. It is advisable to include a suitable trap in the line connecting the appliance's drain outlet to the grey water waste system, thus stopping the steam coming back out of the drain.

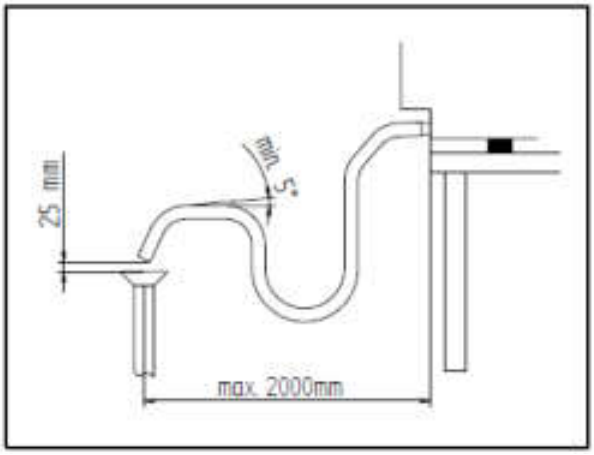

FIG. 1

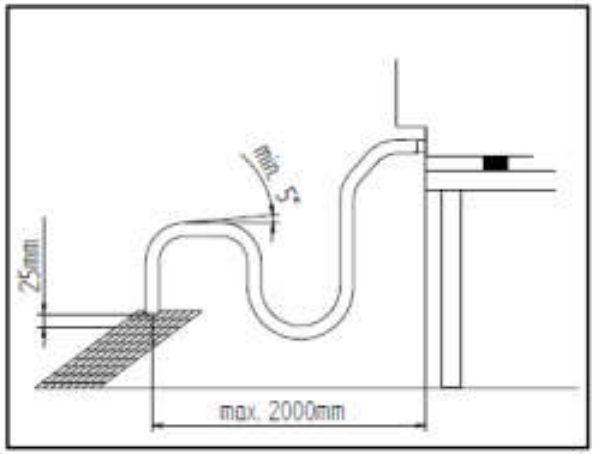

FIG. 2

Connection of power cable - To reach the power terminal board remove the left side of the appliance. Loosen the cable-clamp on the back (at the bottom) of the appliance (see Fig. 1) and pass the cable through up to near to the terminal board. Locate the leads against the terminal board so that the earth lead is the last to detach from its terminal in the event of reverse pulling. Connect the 3 **phase** leads to the terminals marked **"1" "2"** and **"3"**, the **neutral** lead to the terminal marked **"4"** or **"5"** and the **earth** lead to the terminal marked ⏚ as shown in the following layout:

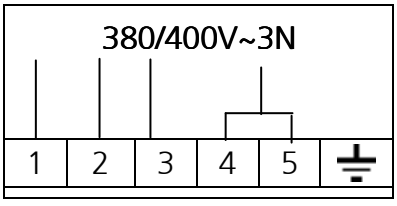

(this electrical connection layout is also available near the power supply terminal board). Tighten the cable clamp on the back (at the bottom) of the appliance and replace the left side. The cable must correspond to those given in the "Technical specifications" table (paragraph 1.1). The appliance must be connected to an **equipotential system** after checking its efficiency according to current regulations.
This connection must be made between different appliances using the special terminal marked with ⏚. The equipotential lead must have a minimum diameter of 2,5mm^2. The equipotential terminal is on the rear of the appliance.

Safety thermal breaker - The appliance has a manually reset safety thermal breaker. It protects against excessive dangerous over-temperatures which could be accidentally generated inside the appliance. If the device is tripped, it interrupts electrical power to the appliance and thus prevents it from operating.

5. Use instructions (for the user)

For first use, we advise you to let the appliance to run load-free at maximum temperature for about one hour. In this way, any unpleasant smells due to thermal insulation and residual work grease are eliminated.
This appliance must be used solely for the purpose for which it was expressly designed, i.e. cooking foods in the oven. Any other use is considered unsuitable.
The appliance can be used: for all oven cooking of deserts, pizzas, meat, fish, vegetables, as well as for gratinating, and for re-conditioning cooled and frozen foods.
When placing food in the cooking compartment, leave a space of at least 40 mm between pans in order not to over-obstruct air circulation.
Do not use pans with higher than necessary edges: edges are barriers which prevent the circulation of hot air.
Warm up the oven before every cooking operation to obtain maximum uniformity.
Do not salt foods in the cooking compartment.

6. Residual risks (for the user)

After a cooking operation, open the door cautiously, to avoid a violent outflow of heat which could cause burns.
While the oven is in operation, pay attention to the hot zones (marked on the appliance) of its external surfaces.
Place the machine on a bench or similar support, at a height of at least 60cm from the floor.
The bench or support must be able to support the weight of the machine and house it correctly.
The appliance contains electrical parts and must never be washed with a jet of water or steam.
The appliance is electrically connected: before attempting any cleaning operation, cut power to the appliance.
To prevent incorrect connection of the appliance, the relevant electrical and water connections are marked by identification plates.

7. How to use the control panel

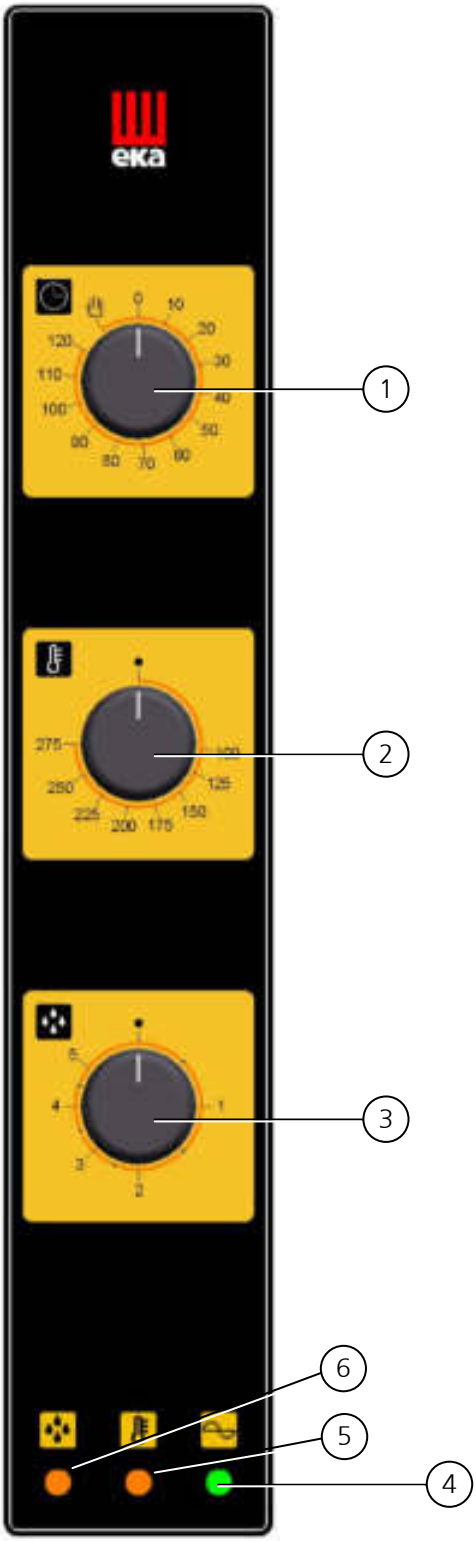

1. "End of cooking" programming knob
2. Control thermostat knob
3. Automatic humidifier knob
4. Power line indicator light
5. Control thermostat indicator light
6. Automatic humidifier indicator light



Fig. 3

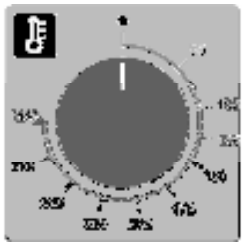

Fig. 4

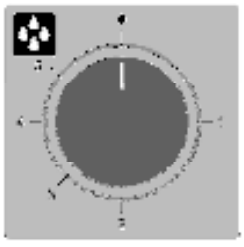

Fig. 5

Programming cooking time - To run the oven, turn the programmer knob (Fig. 3) in line with symbol ✋ (continuous operation) or in line with the selected cooking time (up to 120 minutes). In the second case, end of cooking is signalled by the oven switching OFF automatically.

Programming cooking temperature - Turn the knob of the adjustment thermostat (Fig. 4) in line with the temperature selected for cooking.

Programming vapour quantity - To generate vapour while the oven is in operation (cooking compartment hot), turn the knob of the automatic humidifier (Fig. 5) in line with the required value (from 1 to 5). If you turn the knob to position • (OFF) the humidifier will stop operating.

Remember

- *If you turn the knob to positions **"1" to "4", the humidifier operates by generating vapour** (water is introduced into the cooking compartment) **at automatically adjusted, cyclically repeated time intervals** (The higher the number the higher the humidifier operating time and thus a higher quantity of vapour is produced).*
- *If you turn the knob to position **"5", automatic control of the humidifier is disabled** - it now operates by continuously introducing water into the cooking compartment (continuous production of vapour).*
- *Before beginning to run the automatic humidifier, stabilise the temperature inside the cooking compartment at a value of at least 110°C, order to optimise vapour production.*

Line indicator light - The programmer green indicator light indicates that the oven is operating and that cooking time is active.

Control thermostat indicator light - The control thermostat orange indicator light goes OFF whenever the programmed temperature is reached inside the cooking compartment. It lights up again when the thermostat is tripped to re-establish this temperature.

Automatic humidifier indicator light - The orange indicator light of the automatic humidifier indicates that the water solenoid-valve is operating and, therefore, vapour is being produced in the cooking compartment.

Oven internal light - The light is always on when the oven is operating.

To switch off the oven - Turn OFF the knobs of the "end of cooking" programmer and of the thermostat. When you have finished using the oven, shut off the water ON/OFF tap upstream of the appliance and cut out electric power.

8. Oven cooking

For cooking, before putting food in, warm up the oven to the required temperature. When the oven reaches the temperature, put the food in and check cooking time. Switch off the oven 5 minutes before the theoretical time in order to recover stored heat.

Convection cooking (dry heat) - Operate the oven and turn the thermo state knob to the desired temperature.

Convection cooking + steam (dry heat + wet heat) - Operate the oven and turn the thermo state knob to the desired temperature and the humidifier know the desired steam quantity.

9. Cleaning (WARNING: Cut power to the appliance before every operation)

General cleaning

Before beginning any sort of cleaning work on the appliance, turn the power supply off (at the magnetothermal safety switch) and the water supply (by closing the cut-off cock) and then let the oven cool down completely.
The appliance must be cleaned frequently, preferably daily, to guarantee best operations and long life. This is an electric appliance therefore for obvious reasons water should not be used in excess for cleaning. However, **it is absolutely forbidden to wash the appliance with water jets, especially if they are pointed towards the aeration vents on the metal surface of the outside casing** (this could cause dangerous infiltrations that would damage the electric parts).
If grease remover detergents are used to clean the stainless steel, ensure they do not contain corrosive acids (no sort of chlorine, even if it is diluted) or abrasive products. Follow the indications given on the product and the warnings about its use, wearing rubber gloves during cleaning.
Do not use iron pads, steel wool or scrapers as they would ruin the surfaces.
Do not leave food on the steel surfaces for a long time that contain acid substances (lemon juice, vinegar, salt, etc.) as they could cause corrosion.

Cleaning the cooking chamber

For hygienic reasons, it is good practice to clean the cooking chamber at the end of each cooking cycle, otherwise it should be cleaned at least once at the end of each day's use.
For easier cleaning, remove the side grills by unscrewing the 4 fixing screws (hold the reeded nut between your thumb and forefinger and turn it in an anti-clockwise direction) and please carry out the following operations:

- spray a special degreasing product for stainless steel on the external walls, on the fan casing (do not spray it through the fan grids) and on the glass inside the door;
- leave the product to work for approximately 20 minutes with the door closed;
- turn the oven on to 70-80°C;
- run a cycle with maximum steam (knob "humidity\steam on 5) for around 15 minutes;
- when the cycle is over, switch the oven off, let the oven chamber cool down and flush with plenty of water (use the shower provided)
- Dry with a soft cloth or run a heating cycle, with the temperature at 150-160°C for about 10 minutes (the cycle can be repeated if necessary).

The side grills and drainage plug must be cleaned separately and then replaced.
When cleaning is terminated, leave the oven door slightly ajar.

Cleaning the fans

The fans must be periodically cleaned with specific anti-limescale products. All the parts must be carefully cleaned, removing all limescale deposits.
To have access to the fans remove the fan casing after removing the screws that fix it to the cooking chamber. When cleaning is complete, replace the casing and screws.

Cleaning the door seal

For hygiene and good operations, it is good practice to clean the door seal at the end of each day's work. It should be carefully washed with warm soapy water, rinsed and dried with a soft cloth. Any incrustations or food deposits must be carefully removed, without using sharp metal tools which could irreparably damage the seal.

Cleaning the door

The glass on the door inside the cooking chamber can be cleaned with the same degreaser as used for cleaning the chamber or a normal glass cleaning product can be used (non toxic). Normal glass cleaning products can also be used to clean the glass on the outside of the door, or simply warm soapy water, rinse and then dry the glass well with a soft cloth.

If dull marks form between the two door glasses, these can be removed by dismantling the external glass.

To do this act on the appropriate hooks for closure of the glass.

After cleaning the glass close the external glass acting on reverse.

Cleaning the external casing

The external steel surfaces should be cleaned with a cloth soaked in warm soapy water or with a drop of vinegar added, they should be rinsed well and dried with a soft cloth. If you use specific cleaning products, they must correspond to the requirements for cleaning given in the paragraph "General information". You should also remember that the table the appliance stands on or the surrounding floor should not be cleaned using corrosive acid products (for example muriatic acid), as the fumes that are given off could attack and damage the external steel casing.

Periods without use

If the appliance is not used for a long time, it is good practice to unplug it from the mains (at the magnetothermal safety switch upstream from the appliance) and to turn off the water with the cut-of cock on the main supply line. It should be carefully cleaned inside the cooking chamber and outside, taking special care to remove any salt deposits which would cause corrosion to the steel surfaces. We also advise protecting the appliance with an oily base spray (e.g. Vaseline oil), which forms an effective protective film on the surface of the steel. A suitable covering would also protect the appliance from the dust.

10. Maintenance

General information - A periodic control (at least once a year) of the appliance aids to guarantee long life and correct operations. Any sort of maintenance work on the appliance must be done exclusively by technically qualified operators who have been trained in the maintenance work on this appliance. Before beginning any sort of maintenance work on the appliance, turn the power supply off (at the magnetothermal safety switch upstream from the appliance) and let it cool down. Access is gained to the inside components that could require maintenance work by removing the left side of the appliance.

Changing the lighting lamp in the cooking chamber - The lamp is housed between the two door glasses; to replace it remove the external glass as described in the paragraph: "Cleaning the door".

Open the external glass, unscrew the 2 screws securing the lamp protection cover with the appropriate tool and replace the lamp with another with the same specifications: 12V 35W 300°C (this is a halogen lamp and should not be touched with your bare hands)

Changing the door seal - The door seal has a rigid profile with fixing tabs. The profile must be fitted into the guide on the face of the cooking chamber. The rectangular seal fits perfectly into the frame of the guide and, therefore, the seal profile fits perfectly onto the face of the cooking chamber. To change the seal, remove the old one from the guide by pulling hard at the four corners. Clean any dirt from the guide and introduce the new seal (to make this operation easier, we advise dampening the seal profile with soapy water).

Possible faults

Type of fault	Cause	Corrective action
Control panel completely off (the oven does not work)	- Incorrect electric connections to the mains	- Check the mains connection
	- No mains voltage	- Restore mains voltage
	- Thermal break safety device tripped	- Reset the thermal break safety device
Cooking cycle set: the oven does not work	- Door open or ajar	- Close the door
	- Damaged door microswitch	- Contact a qualified technician to repair the sensor
Automatic humidifier ON: no steam is produced in the cooking chamber	- Incorrect connection to water mains	- Check the connection to water mains
	- Cut-off cock closed	- Check the cut-off cock
	- Blocked water inlet filter	- Clean the filter
	- Damaged water inlet solenoid	- Contact a qualified technician to repair the solenoid
Door closed: steam comes out of the seal	- Seal not fitted correctly	- Check the seal fitting
	- Damaged seal	- Contact a qualified technician to repair the seal
	- Handle prong loosened	- Contact a qualified technician to repair the prong
The oven does not cook evenly	- One of the motors is blocked or turns slowly	- Contact a qualified technician to repair the motor
	- The motors do not go into reverse	- Contact a qualified technician to repair the motor
	- Heating element not powered or is damaged	- Contact a qualified technician to repair the element
Lighting lamp in the cooking chamber does not work	- Damaged lamp	- Change the lamp
	- Damaged lamp feeder	- Contact a qualified technician to repair the feeder
The thermo safety device turns on in continuous	- Device damaged	- Contact a qualified technician to repair the feeder
	- Regulating thermo state damaged	- Contact a qualified technician to repair the feeder

11. Technical service

Before leaving the factory, the appliance was completely regulated and tested by expert specialised personnel to guarantee the best operating results.
All repairs and settings must be performed with utmost care and attention, respecting national safety regulations in force. Always contact your retailer or our nearest Service Centre, giving details of the problem, the appliance model and the serial number (on the rating plate on the rear panel). For any maintenance the user can contact Tecnoeka by calling the telephone numbers on the cover or going to www.tecnoeka.com.

12. Informations to the consumers

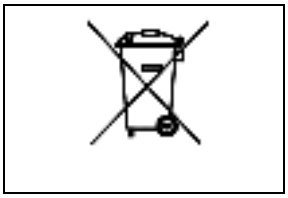

Further to Directive 2002/96/EC, the symbol of the crossed rubbish skip on the appliance means that at the end of its life, the product must be disposed of separately from the other rubbish. The user must hand the appliance to a specialised waste collection centre for electric and electronic equipment.
The separate collection of the rubbish and subsequent treatment, recovery and disposal help to produce other equipment using recycled materials, reducing the negative effects on the environment and public health, which would be caused by incorrect management of the rubbish. Should the user dispose of the product abusively, administrative sanctions would be applied.

13. Wiring layout

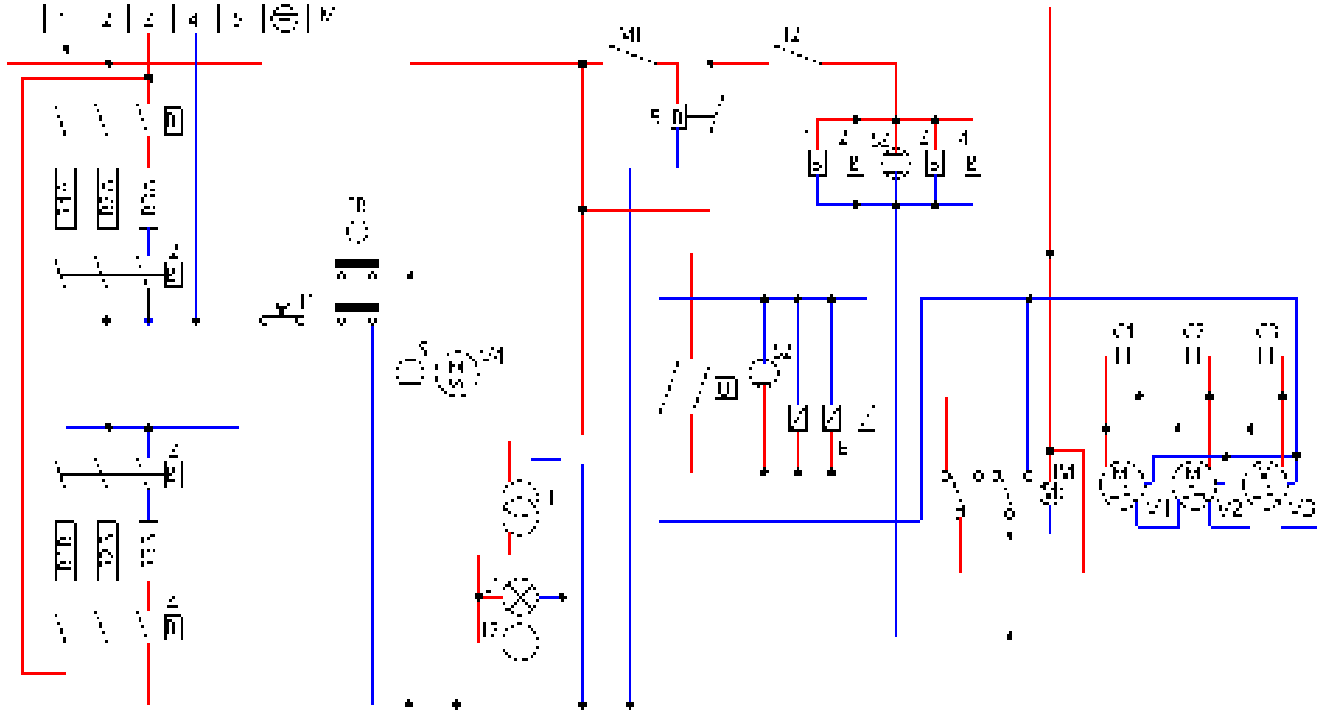

Key

M	Power terminal board	T	Transformer for oven lamp
PR	"End of cooking" programmer	L1-L2	Oven lighting lamp
T1	Safety thermostat	V1-V2-V3	Radial motoventilators
T2	Oven thermostat	V4	Tangential motorised ventilator
U	Automatic humidifier	R1-R2-R3	Circular heating elements
S1	Power line indicator light	E1	Solenoid-valve for automatic humidifier
S2	Automatic humidifier indicator light	C1-C2-C3	Capacitors
S3	Thermostat indicator light	IM	Operating direction reversing element
B1-B2-B3-B4	Contactor coil	MI	Door microswitch
B5	Relais coil		

14. The Warranty

Your appliance is covered by warranty. The seller will replace or repair (and his decision will be final), free of charge for the customer, only those parts that are defective due to a manufacturing fault on condition that, under penalty of forfeiture:

- for domestic equipment, the customer notifies the fault within two months from the date when he/she discovered it and anyway within 2 years form the date of purchase;
- for professional equipment, the customer notifies the fault within 8 days from the date when he/she discovered it and anyway within 12 months from the date of purchase,

by registered letter with acknowledgement of receipt and enclosing the invoice or receipt proving the purchase.

Apart from the case when the customer cannot produce the invoice or receipt proving the purchase or when the above-mentioned terms are not complied with, the **warranty is expressly excluded** in the following cases:

1) faults or breakage caused by the transport;
2) wrong or incorrect installation of the product (for instance because of insufficient draught of the flue or exhausts) in light of the instructions given in the user's handbook supplied with the product;
3) inadequate or abnormal electrical, hydraulic and/or gas supplies;
4) carelessness, negligence or incompetence in using the product in light of the instructions given in the user's handbook supplied with the product;
5) use of the product for uses different from the one for which it was built or anyway in a manner not compliant with the instructions given in the user's handbook supplied with the product;
6) tampering with the product;
7) adjustments and/or maintenance and/or repairs carried out by unauthorised personnel and/or with non original spare parts;
8) inadequate or careless maintenance of the product in contrast with the user's handbook supplied with the product;
9) damages caused by fire, natural disasters and accident as well as by any cause not attributable to TECNOEKA SRL.

The warranty explicitly excludes: varnished or enamelled parts, knobs, handles, movable or removable plastic parts, bulbs, glass parts, refractories and any accessories.

TECNOEKA SRL cannot be held responsible for any damages, either direct or indirect, caused by the product breaking down or following its non-use.

Any repairs carried out during the warranty do not cause said warranty to be extended or renewed.

Nobody is authorised to modify the terms and conditions of the warranty or to issue new verbal or written warranties.

The warranty is valid only for appliances installed in the European Union.

Any dispute shall be settled by the competent Court in Padua.

Warning for the Buyer:

1. the cooking appliance is designed only for cooking purposes while the heating appliance is designed only for heating domestic environments;
2. TECNOEKA S.r.l. does not install the appliances; the seller shall be responsible for any installation carried out;
3. TECNOEKA S.r.l. cannot be held responsible for any damages, either direct or indirect, to people, pets or property caused by the appliance breaking down or following its non-use.

The Manufacturer cannot be held responsible for any inaccuracies due to misprints or mistakes in copying in this handbook. The Manufacturer reserves the right to modify the products as he deems fit, also in the interest of the user, without affecting the vital characteristics of functionality and safety.