COMMERCIAL ELECTRICAL DONER (SHAWARMA) MACHINE

USER MANUAL

CE

MODELS: SD10-SD14-SD17-SD18-MA03-SD15-SD12-SD16-SD19

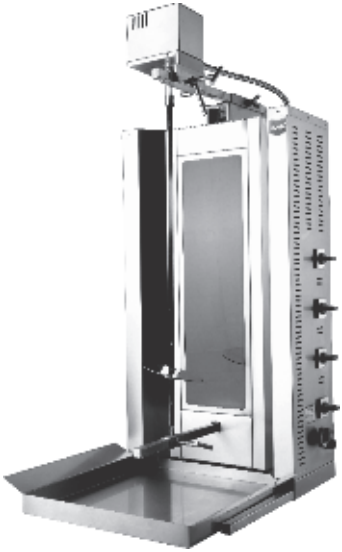

Producer: REMTA MAKİNA İTH. İHR. SAN. TİC. LTD. ŞTİ.
Producing Address: Akçaburgaz Mah. 4. Cad. 153. Sok. No:23 34522 Esenyurt - İstanbul
+90 212 886 27 11 • info@remta.com.tr • www.remta.com.tr

1.PRESENTATION

Dear user;
Our best thanks to you about you to choose our product and trust in us. Our products are used in lots of domestic cities like your choice. Our product is manufactured according to the standard rules. We kindly remind that you to read the user manual carefully for having the best performance against your expectations from the product and using for long time and be sure the other users read it, too. Please care about the rules written below before calling the service.

2.WARNINGS

Please read this manual carefully and be sure the other users read it, before the product is installed and operated for first. The product will be out of warranty if you operate the device without reading the user manual. The user manual should be written carefully to install, use and the maintenance of the product that you have bought. The electrical circuit that you will plug in your product, should be suitable for the legislations. The faults are in your responsibility which are occurred by your electrical circuit. Please call the authorized service to have more information about the subjects that you have doubts or misunderstand. We wish you to have the best performance from the product. You will be charged when you want service next to you about this product.

3.DESCRIPTION AND PURPOSE OF THE PRODUCT

The device is produced to cook the meat with cooker burners which is used in the industrial kitchen services (collective food services, restaurants, touristic places, buffets and etc.)

PREPARINGS BEFORE ASSEMBLING

Please read this manual carefully and be sure the other users read it, before the product is installed and operated for first. The product will be out of warranty if you operate the device without reading the user manual.Please call the authorized service to have more information about the subjects that you have doubts or misunderstand.

The electrical circuit that you will plug in your product, should be suitable for the legislations installed by authorized person before you call the service for activation the device. Please care about the security details.

It will be charged to you for the unnecessary time spends and the other spend by the service person if you do not prepare the steps before assembling.

TECHNICAL PROPERTIES

KOD *Code*	KAPASİTE *Capacity*	ÜRÜN ÖLÇÜSÜ *Product Dimensions*	AĞIRLIK *Weight*	GÜÇ *Power*
SD10	20 kg	420*550*700mm	17,5 kg	2800 W
SD14	30 kg	540*640*940mm	25,5 kg	4200 W
SD17	50 kg	540*640*1100mm	28 kg	5600 W
SD18	60 kg	540*640*1260mm	25,5 kg	4200 W
MA03	50 kg	520*700*1250mm	38 kg	5600 W
SD15	20 kg	420*550*660mm	15,5 kg	2800 W
SD12	30 kg	540*640*910mm	23,5 kg	4200 W
SD16	50 kg	520*700*1200mm	29 kg	5600 W
SD19	60 kg	540*640*1370mm	31 kg	7000 W

GENERAL DIMENSIONS AND THE LABELS

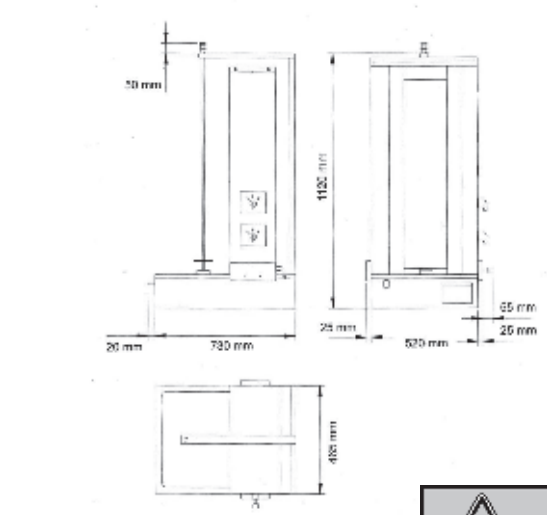

ELEKTRİKLİ DÖNER OCAĞI	CE

ÜRÜN KODU: SD17
MODEL: 4'lü ELEKTRİKLİ ÜSTTEN MOTORLU / SHAWARMA ELEC.

VOLTAJ / Voltage	**220 - 230 V 50-60 Hz**
AKIM / Nominal Current	**25,5 A**
GÜÇ / Power	**5600W**
ÜRÜN SINIFI / Product Class	**I / IP 20**
AĞIRLIK / Weight	**28 KG**
EBAT / Dimensions	**540x640x1100 mm**

REMTA MAKİNA • AKÇABURGAZ MH. 4.CD 153.SK. NO:23 ESENYURT / İSTANBUL / TURKEY • TEL: +90 212 886 27 11	www.remta.com.tr
SERİ NO:	MADE IN TURKEY



WARNING! GROUNDED ELECTICITY CIRCUIT



HOT SURFACE

SAFETY DETAILS

ASSEMBLING SAFETY
The device should be located and operated in a suitable for legislation and well aired place. Please check the instructions before locating and operating the device. It has to be operated in a well aired place. The all flammable solid and liquid materials (cloth, alcohol kinds, petrochemical materials, wooden materials, plastic materials and curtain) should be removed from the area that the device is operated.

USAGE SAFETY
All user should read the user manual. The oil which falls out while the device is operated may occur greasy surface on the ground, so should be cleaned on time.

MAINTENANCE AND CLEANING SAFETY
Do not use pressured water when you clean the device. The device should be cleaned when it is out of use. If any flammable cleaners are used on the surfaces of the device, these surfaces should be cleaned and dried well before first use after this cleaning. Just the authorized service person should fix the device.

Caution:
-Please read this manual carefully and be sure the other users read it, before the product is installed and operated for first.
-The electrical circuit that you will plug in your product, should be suitable for the legislation and dseigned by authorized person only.
-Please call the authorized service to have more information about the subjects that you have doubts or misunderstand.
-The device should be plugged into the grounded socket out.
-Do not carry the device when the cooker surfaces are hot.
-The device should be located on a flat and non-vibration surface.
-Please be sure the device is plugged out when you clean it.
-The device works with 220-230 Volt ~ 50-60 Hz electricity.
-Do not put any insulator or conductive object in to the device.
-Keep away from the children.
-The electricity circuit should have a leakage current breaker as 30 mA.
-The cable of the device should be changed with a brandnew one by an authorized service person only if it is damaged.
-Do not use the device out its main purpose.

CARRYING AND MOVING

CARRYING

• It can be carried by human power.
• Do not bump or drop the device while you carry it.

MOVING

-Only the authorized tecnical service personal can change the operation place, changing the cable of the device (adding, fixing,shorting etc.)
-The all switches on the device should be checked, all the cooking surfaces should be warmed down before replacement of the device. After replacement the device the all components of the device should checked again if the device is working or not.
-The device becomes out of warranty if any one makes any replacement instead of the authorized technical service.

MONTAGE

Customer Preparings

• The non flammable compartments should be at least 5 cm close to the device otherwise distance should be 20 cm for the flammable parts.
• Care about the rules against the fire.
• Please make ready the electrical circuit before you call the authorized technical service for installing the device.

Montage (Technical Service Responsibility)

-The under set desk should be parralel with the ground and have adjustable legs when the device is use on it. The device should be located on a flat and non-flammable surface.
-The safety situations should be checked for the validity before installing the device.
-Do not connect the device instead of the properties written onit.
-The device should be checked after it is installed if it is working or not.
-The device becomes out of warranty if any exparts are used which are not oiginal.

USING THE DEVICE

PURPOSE OF THE PRODUCT

The device is produced to cook the meat with cooker burners which is used in the industrial kitchen services (collective food services, restaurants, touristic places, buffets and etc.)

Note: Do not use the device out its main purpose. The users should read the user manual and care about the safety before using the device.

USAGE:

Placing The Food,
The food which is prepared before should be fixed to the device.

Operating:
1-Put the small plate (nr:9) to the doner skewer (nr:6) from the upside., then fix the down part to the skewer middle (nr:7) and fix the up part to the skewer holder (nr:5)
2-Make the motor switch (nr:18) as I position to unfix the doner skewer (nr:6)
3-The cooking block (nr:1) is backward and forward movable. You can adjust the position of the cooking surface according to the food amount.You can fix the cooking block via using the brake apparatus (nr:20) with turning right and left.
4-You use the device by manually if the motor becomes out of use.
5-You can adjust the cooking time of the food by positioning of the swicth as maximum (2) or minimum (1).

TURN OFF THE SWITCHES AND CUT OFF THE ELECTRIC CIRCUIT BREAKERS AFTER END OF THE USE

Turning Off:
-Turn off the switch from the on position.
-For your own safety please cut off the electrical connection.

CLEANING AND MAINTENANCE

CLEANING:

• Clean the out surface with a sponge via using dish detergent and dry it out after every end of service beginning the first use.
• After every use the device should be cleaned very well. The burnt oil on the device and the table can make bad smell and that can occur unhealthy situations.
• Do not use nitric acid or any kind of CHEMICAL MATERIALS to clean the device.

MAINTENANCE:

• The periodical maintenance should be done by the authorized technical personal.
• We recommend to maintenance for about per every 6 months according to the using frequency.
• It will be charged to user for maintenance even the device is warranty.

EFFICIENCY USE

• Turn off the device when it is out of use.
• Allways keep the device clean.
• Please obey the directives written in the user manual.
• At 24 °C, you can have the best performance from the device.
• The device can work between -5 and +40 °C.
• The life of the device is about 10 years..

PARTS DESCRIPTION

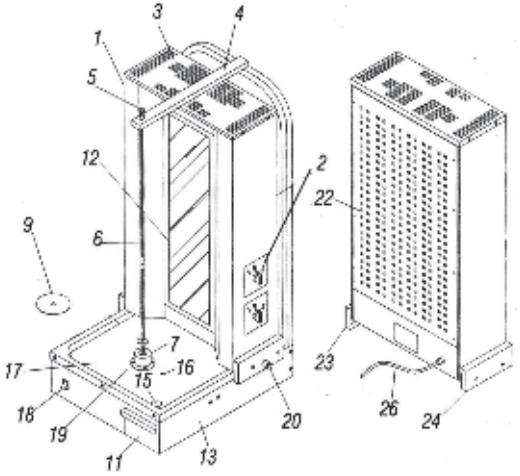

1	main body	9	small plate	18	motor on / off switch
2	switch and button	11	oil holder drawer	19	motor on / off switch
3	up side cover	12	cooking block	20	break apparatus
4	doner skewer holder profile	13	up side chasis	21	motor electric cable
5	doner skewer holder	14	pedal	22	back side cover
6	doner skewer	15	oil exhaust hole	23	moving box (right)
7	doner skewer middle	17	table	24	moving box (left)
				26	main electric cable

SERVICE AND EXPART POINT

REMTA MAKİNA İTH. İHR. SAN. ve TİC. LTD. ŞTİ.
Adres: Akçaburgaz Mah. 4. Cad. 153. Sok. No:23 Esenyurt / İstanbul
Tel: +90 212 886 27 11
servis@remta.com.tr • www.remta.com.tr

You can find all comunication information about our services in the link below.

www.remta.com.tr/yetkili-servisler