BLAST FREEZER
BLAST CHILLER

NEMOX®
PROFESSIONAL CLASS

ISTRUZIONI D'USO E MANUTENZIONE

ISTRUCTIONS FOR THE USE AND MAINTENCE

ISTRUCTIONS POUR L'UTILISATION ET LA MAINTENANCE

CE

INDEX

INTRODUCTION	35
REGULAR MAINTENANCE	36
EXTRAORDINARY MAINTENANCE	37
INSTALLATION INSTRUCTIONS	38
INSTALLATION	39
RECOMMENDATIONS FOR CORRECT USE	40
INFORMATION FOR A CORRECT WASTE	44
ELECTRONIC CONTROLLER WORKING	45

INTRODUCTION

The manifacturer would like to thank you for having chosen its products and we are sure that you will be more than satisfied with their performance.
To help maintain efficiency and performance in time, we have prepared this manual that describes the correct use and maintenance of the Blast Chiller Freezer.

TYPE OF USE AND LIMITATIONS

This Blast Chiller Freezer has been designed for chilling and preserving food (it rapidly lowers the temperature of cooked food in this way preserving quality and guaranteeing freshness for several days). Any other use is considered improper and incorrect.
This Chiller cannot be installed outside and or in environments subject to weather conditions.
The manufacturer declines all responsibility for uses other than those given in this manual.

TESTING

The Chiller is dispatched only after it has been tested (visual inspection – electric test – functional test). Final testing is certified, for the relevant documentation please refer to the enclosed appendixes.

GENERAL SAFETY STANDARDS

The Chiller in question is manufactured conforming with the European Directives relevant to low tension *73/23-93/68/EEC,* and electromagnetic compatibility *89/336/EEC;* EN60335- 1, EN60335-2-24, EN55014, EN61000-3-2, EN61000-3-3, EN55104.

WHAT THE CUSTOMER MUST PROVIDE ON SITE LOCATION

It is necessary that there is an earthed power socket suitable for the electrical input indicated on the metal plate, a thermomagnetic switch with at least a 3 mm break contact.

CAUTION: The Blast Chiller must be powered by a single phase power supply (230 V – 50 Hz). Make sure it is level and always use qualified personnel to install, repair and service your Chiller.

TECHNICAL ASSISTANCE

Thanks to the network of concessionaires and authorised service centres, the manufacturer guarantees its customers an after-sales service.

REGULAR MAINTENANCE

WARNINGS

Regular maintenance work can be carried out by non-specialised personnel who, however, must always adhere to the instructions given in this manual. Before cleaning or servicing the chiller lock-off the power supply. When carrying out regular maintenance work do not remove any of the safety guards.

CLEANING THE CHILLER AND ACCESSORIES

Before using this Chiller clean on the inside and all the accessories. Use warm water and neutral soap. Rinse and dry well. Do not use solvent or powder based detergents and use a silicon wax to protect the steel.

PERIODICALLY CLEANING THE CONDENSER

The condenser should be cleaned periodically. Cleaning intervals will depend on how frequently it is used.

CAUTION: To access the condenser (please refer to page 16 in the spare parts catalogue) it is necessary to remove the safety guards. Always use qualified and specialised personnel.
To guarantee efficiency and performance in time, it is necessary to clean the condenser periodically. It is highly recommended if located in dusty environments to clean the louvers on the refrigerating unit once a month and once every three months if located in closed and clean environments. To remove dust and dirt from the louvers use a brush or vacuum cleaner. Do not use sharp objects or tools that could damage the condenser. Do not clean using water jets.

MEASURES TO TAKE WHEN OUT OF SERVICE FOR A PERIOD OF TIME

When the Chiller is out of service for a long period of time take the following measures:

- Remove the plug from the power socket;
- Remove all food and clean the inside of the Chiller and all accessories;
- Buff all the stainless steel surfaces with a cloth moistened with vaseline oil to give a protective coating;
- Leave the door ajar for air circulation to prevent bad odours;
- Periodically air the room or kitchen where the Chiller is installed.

EXTRAORDINARY MAINTENANCE

CAUTION: Extraordinary maintenance and servicing work must be carried out be qualified personnel!

UNDERSTANDING SIMPLE MALFUNCTIONS

At times malfunctions are due to simple and trivial causes and nearly always there is no need to call in a specialised technician, therefore before informing the company check for the following:

The Chiller is not powered:

c. Check that it is plugged in;
d. Check that there is power.

The Chiller does not reach the correct internal temperature:

c. Check the temperature settings;
d. Check the probe.

The Chiller is excessively noisy:

c. Check that the Chiller is level. If unbalanced this could cause vibrations creating excessive noise.
d. Check that the Chiller is not positioned up against other machines or objects causing vibrations.

After having proceeded with the foregoing checks and if the problem persists, contact the company giving:

- A description of the type of malfunction;
- Chiller code and serial number which are indicated on the metal plate.

WASTE DISPOSAL AND SCRAPPING

Storing waste:
It is possible to temporarily store special waste products that are to be scrapped. However, the user must observe and adhere to the local governing laws regarding waste management.

Macro – dismantling the Chiller:
Each country has its own waste management laws, therefore the user must observe and adhere to the local governing laws where the Chiller is to be scrapped.
As a general guideline the Chiller should be handed over to a special waste treatment plant. Dismantle it and divide the various components into groups according to their chemical properties. Remember that there is oil and refrigerating solutions in the condenser that can be recuperated and reused and the various components are considered special waste products and as such are treated as urban waste.

CAUTION: All dismantling operations must be carried out by specialised personnel!

INSTALLATION INSTRUCTIONS

INTRODUCTION

This manual aims at providing the user with all the necessary information to correctly use and maintain the Chiller.
Before use carefully read all the instructions given in this manual.
The manufacturer shall decline all responsibility for operations and use which disregard the instructions herein.

MATERIALS AND CHILLING SOLUTIONS

All the surfaces that come in contact with food are in stainless steel.
This Chiller has an HFC chilling solution which is consented by current law. The type and quality of the gas is indicated on the metal plate.

ELEMENTARY SAFETY STANDARDS – RISKS

The Chiller has no dangerous corners, sharp and cutting surfaces or protruding parts. All safety guards on moving parts or electrics are screwed to the cabinet. These guards avoid any form of accidental contact with parts that present a risk to the user. Always respect safety standards:

- Do not touch the Chiller with wet hands or feet;
- Not use the Chiller barefooted;
- Do not poke screwdrivers, cutlery or other objects between the safety guards mounted on moving parts;
- Before cleaning or servicing the Chiller lock-off the power supply.

INSTALLATION

Carefully follow and adhere to the instructions given in this chapter to guarantee working efficiency and safety when the Chiller is in use.

CAUTION: When transporting or moving the Chiller to the installation site do not push or drag it, lift it and position it on a trolley to avoid overturning.

LOCATION

Locate the Chiller in a ventilated area distant from heat sources such as radiators, air conditioning units, deep-fryers and ovens.
Make sure the Chiller is located at a distance not less than 10 cm from the back wall to permit a good cooling effect for the various components.
To maintain the correct internal temperature, the ambient temperature must not exceed +32°C
Adjust height and levelling using the support feet and also check the door closes. If the Chiller is not perfectly level working efficiency and condensation flow may be affected.
Remove the PVC protective film on both sides of the Chiller.

CONNECTING TO THE POWER SUPPLY

The Blast Chiller works off single-phase tension 230V- 50Hz.
To connect to the power supply, simply plug the power cable in the power socket or connect the Chiller to the electrical panel, however before connecting check that:

- The socket is earthed and frequency and tension correspond to the information given on the metal plate. If in doubt about earthing, call in a qualified electrician to check wiring.
- A suitable thermomagnetic switch must be provided between the power cable and electricity line with at least a 3 mm break contact.
- when the Chiller is connected to the mains check that the supply tension, with the Chiller working, does not exceed or go under the rated tension by +/- 10%.

CAUTION: the manufacturer shall not be held responsible for damage or accidents caused by negligence due to the non-observance of the recommendations and regulations given or of the local governing standards and laws regarding electrical safety.

RECOMMENDATIONS FOR CORRECT USE

Before using the Chiller remove all traces of glue using a detergent as there might be traces of condensate due to final testing in the factory.
Chiller efficiency when chilling and freezing depends on the following factors:

Type of containers to use:
We recommend you use pans (or containers with sides no greater than 65 mm in height) to permit an effective air circulation (the food product should be exposed to the air circulation as much as possible to reduce chilling times). To avoid the food being contaminated, we recommend you carefully clean all containers and trays. We also recommend you keep the food in the same cooking pan when chilling.

Using covers:
Do not cover the food when chilling or freezing. Only once the chilling and freezing cycles have been completed or before storage can you cover or pack the food.

CYCLES

BLAST CHILLING

The blast chilling cycle rapidly lowers the temperature of the food to a minimum of +3 °C.
Blast chilling is for food that will be consumed within a few days.

BLAST FREEZING

Blast freezing is for storing food for longer periods of time. When blast freezing the water content in the food is micro crystallized so when defrosting the food is not altered in any way maintaining both its appearance and nutritional value. When freezing the food core temperature reaches –18°C.

STORAGE

The Chiller has a storage cycle, in other words it maintains a set temperature, which is automatically activated when the chilling or freezing cycles have been completed. This storage is continuous and to stop the program simply press the (ON-OFF) button.
Due to Chiller consumption, we recommend that you do not use this Chiller for storing food for a long period of time. We suggest you store the food in fridges or freezers.

INFORMATION FOR A CORRECT WASTE
Directive on the electrical appliances waste (WEEE) (RoHS)

In the optical of the respect of the ambient of the health and based on the sanctioned dispositions from the Directive 2002/95/CE of the European Union in matter of limitation to the use of dangerous substances (RoHS), regarding:

- LEAD (Pb)
- MERCURY (Hg)
- HEXAVALENT CHROMIUM (Cr VI)
- CADMIUM (Cd)
- POLYBROMINATED BIPHENYL (PBB)
- POLYBROMINATED DIPHENYL ETHER (PBDE)

and according to of art. the 13, D.Lgs. 25 July 2005, n. 151 "Performance of the Directives 2002/95/CE, 2002/96/CE and 2003/108/CE, relative to the reduction of the use of dangerous substances in the equipment electronic electrical workers and, to the waste disposition, the manufacturer declares that its products respect such norms.



The following symbol on the side of the equipment indicates that the product must not be disposed of as urban waste. Disposing of a household appliance separately avoids possible negative consequences for the environment and health deriving from inappropriate disposal and enables the constituent materials to be recovered to obtain significant savings in energy and resources. As a reminder of the need to dispose of household appliances separately, the products is marked with a crossed-out wheeled dustbin.

For information on the points of collection of the wasted equipment, contact the residence borough, the local waste service or just the retailer in the case of purchase a new equipment.
The illicit waste of the product from part of the customer involves the application of the administrative endorsements of which article 50 and following of the D.Lgs n. 22/1997.

ELECTRONIC CONTROLLER WORKING

1.1 Important

Carefully read these instructions before installation and use. Carefully adhere to all warnings provided concerning installation, wiring and connection to the mains electrical supply.

1.2 Installation

Panel with snap-on brackets provided; measurements in mm; measurements in mm.

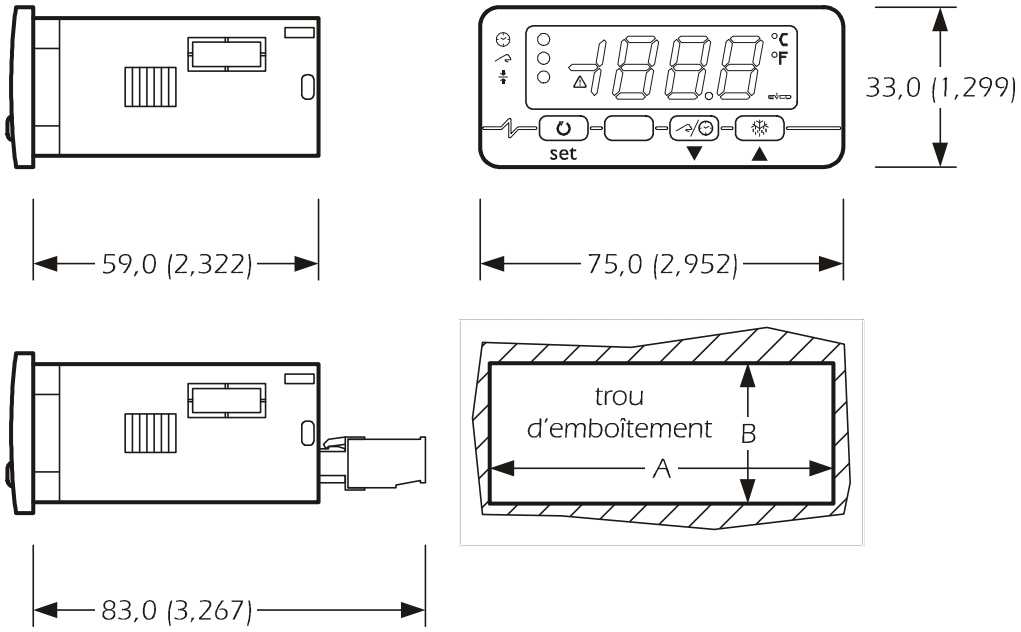

The maximum depth is 89.5 mm whatever the type of connection and refers to models with Faston connections (straight female Faston correctly inserted).

MEASUREMENT	MINIMUM	STANDARD	MAXIMUM
A	71.0	71.0	71.0
B	29.0	29.0	29.8

Warnings when installing:

- 59.0 is the maximum depth with screw terminals
- 83.0 is the maximum depth with pull-out terminals
- panel thickness must not exceed 8.0 mm
- check that all work conditions (working temperature, humidity etc) are within the limits provided in the technical specifications.
- do not install this system in proximity of heat sources (heating elements, hot air outlets etc), equipment with powerful magnets (industrial and large sized

diffusers etc), direct sunlight, rain, humidity, excessive dust, mechanical vibrations and jolts.

- in conformity with the safety standards in force the protection provided to prevent contact with the electrical parts is guaranteed by installing the system correctly. All protective parts must be mounted and secured in place so that they cannot be removed without the aid of a tool.

1.3 WIRING AND ELECTRICAL CONNECTION

Referring to the wiring diagram:

- the function managed by relay K2 is subject to parameter u0
- the serial port (upon request) is the communication port with the monitoring system (serial interface, via TTL - transistor – transistor logic - with a MODBUS communication protocol) or with the programming key; the port must not be used simultaneously for both purposes.

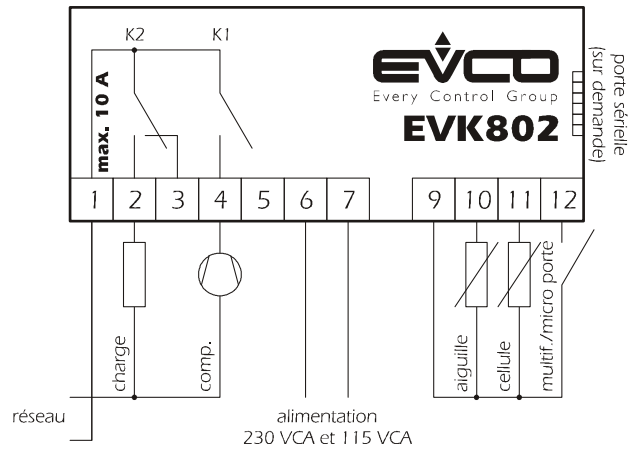

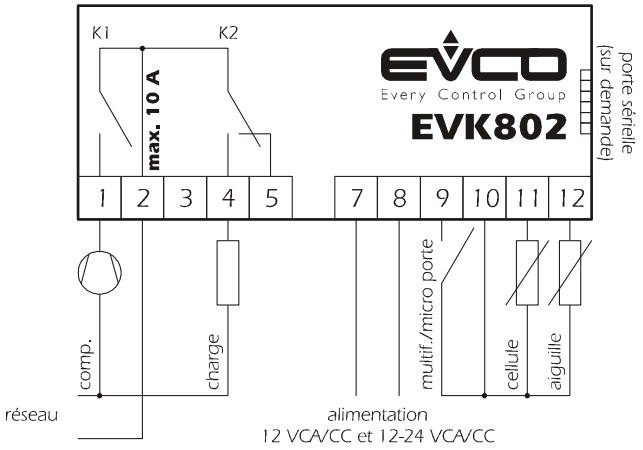

Warnings when wiring and connecting to mains supply:

- do not use electrical or compressed air driven screw drivers for the terminals

- if this system is moved from a cold location to a warmer location, condensation may form on the inside; wait for approximately an hour before powering.
- check system supply voltage, frequency and wattage correspond to the mains electrical supply
- always disconnect the system from the power supply before proceeding with any type of maintenance and or repair work
- do not use this system as a safety device
- for repairs and information concerning this system refer to your local sales outlet

2 USER INTERFACE

2.1 Preliminary instructions

There are two working modes:
- "on" (the system is powered and a cycle is running)
- "stand-by" (the system is powered but a cycle is not running)
- "off" (the system is not powered)

If the power supply is unexpectedly interrupted during a timer controlled chilling cycle, the moment power is restored the chilling cycle continues from the moment it stopped (maximum error margin 10 minutes).
If the power supply is unexpectedly interrupted during a temperature controlled chilling cycle, when power is restored the cycle restarts from the beginning of cycle.
If the power supply is unexpectedly interrupted during storage, when power is restored storage mode continues.
If the power supply is interrupted with the blast chiller in stand-by mode
, when power is restored the chiller returns to stand-by.

2.2 Display

When "on" and during normal functioning, the following information is displayed:
- remaining cycle time for timer controlled blast chilling if blast chilling
- the temperature detected by the needle probe if running a blast chilling cycle
- chiller temperature when running a storage cycle.

With the chiller in "stand-by" during regular functioning, the internal chiller temperature is displayed for ½ a second every 3 seconds.

2.3 Defrosting and evaporator fan

The function managed by relay K2 is subject to parameter u0
- if u0=0 the function managed by relay K2 is defrosting (electrical defrosting; the evaporator fan is not managed)
- if u0=1 the function managed by relay K2 is the evaporator fan (defrosting with compressor off)

- when blast chilling the evaporator fan is managed by parameter F0
- for storage the evaporator fan is managed by parameter F2
- when defrosting the evaporator fan is turned on.

With the chiller in stand-by only manual defrosting is possible; if the function managed by relay K2 is the evaporator fan (parameter u0=1) the evaporator fan is turned on and when dewatering this fan is turned off.
For manual defrosting:

- check that no other cycle is running
- press for 4 seconds

When blast chilling deforesting is never activated.
When running a storage cycle defrosting is activated at set intervals; is possible to activated defrosting in manual mode.

2.4 Compressor and evaporator fan conditions

To display information concerning the compressor:
check that no other cycle is running
• press : the first available tag is displayed:
if "C-1" is displayed, the compressor is on
if "C-0" is displayed, the compressor is off
- if "C-P" is displayed, compressor protection is running (parameters C0, C1, C2 and i7).

To display information concerning evaporator fan:
check that no other cycle is running
• press twice: the first available tag is displayed:
if "F-1" is displayed, the evaporator fan is on
if "F-0" is displayed, the evaporator fan is off
if "F-P" is displayed, fan start up is delayed (parameter F8).
To escape this procedure:
• press until the current chiller mode is displayed (refer to paragraph 2.2), or do not use for 15 seconds.
If the function managed by relay K2 is defrosting (parameter u0 = 0), tags "F-1", "F-0" and "F-P" are not displayed.

3 CYCLES

3.1 Preliminary instructions

Chiller cycles are:
positive temperature timer controlled chilling and storage
negative temperature timer controlled chilling and storage
positive temperature with temperature controlled chilling and storage
negative temperature with temperature controlled chilling and storage

Before running a temperature controlled chilling cycle a test is run to check that the needle probe has been inserted correctly (refer to paragraph 3.6).

To restart utilising the same settings as the last cycle run:
make sure the system is in "stand-by" mode and that no procedure is running and that another cycle has not be selected
• press for 2 seconds: the last tag for the last cycle run is displayed
• press within 60 seconds: cycle time is displayed if running timer controlled chilling cycle (unit of measurement is in minutes) or chilling temperature to reach if running a temperature controlled chilling cycle
• press or within 15 seconds to modify value setting (setting remains active until another cycle is selected or when the value defined by parameters
r1, r2, r3 or r4 is restored)
• press within 15 seconds: cycle will start running.

3.2 Positive temperature timer controlled chilling and storage

To start the cycle:
check that the system is in "stand-by" mode and no other procedure is running
• press to select "PoS" check that the LED is flashing
• press within 60 seconds: blast chilling time will be displayed (the unit of measurement is in minutes)
• press or within 15 seconds to modify value setting (setting remains active until another cycle is selected or when the value defined by parameters
r1)
• press within 15 seconds: cycle will start running.
<u>During blast chilling:</u>
remaining chilling time is displayed
• LED is on
parameter r1 defines chilling time
parameter r7 defines working setpoint
• press several times:
- "PoS" is dipalyed
- displays chiller internal temperature
- escape this procedure or do not use for 15 seconds

After chilling time has been reached:
• the chiller goes into storage mode
• "End" is displayed
• a buzzer is activated and buzzer time is defined by parameter AA
• press a key to turn off the buzzer; press the key again to delete the prompt "End".
<u>During storage:</u>

chiller internal temperature is displayed
• LED and are on
parameter r9 defines working setpoint
• press several times:
"PoS" is displayed
- escape this procedure or do not use for 15 seconds
To suspend the cycle:
• press for 2 seconds:

3.3 Negative temperature timer controlled chilling and storage

To start the cycle:
check that the system is in "stand-by" mode and no other procedure is running
• press to select "nEg" check that the LED is flashing
• press within 60 seconds: blast chilling time will be displayed (the unit of measurement is in minutes)
• press or within 15 seconds to modify value setting (setting remains active until another cycle is selected or when the value defined by parameter
r2 is restored)
• press within 15 seconds: cycle will start running.
If negative temperature blast chilling and storage cycles are not enabled (parameter rb = 0) tag "nEg" is not displayed.
<u>During blast chilling:</u>
remaining chilling time is displayed
• LED is on
parameter r2 defines chilling time
parameter r8 defines working setpoint
• press several times:
- "nEg" is displayed
- displays chiller internal temperature
- escape this procedure or do not use for 15 seconds

After chilling time has been reached:
• the chiller goes into storage mode
• "End" is displayed
• a buzzer is activated and buzzer time is defined by parameter AA

press a key to turn off the buzzer; press the key again to delete the prompt "End".
<u>During storage:</u>
chiller internal temperature is displayed
• LED and are on
parameter rA defines working setpoint
• press several times:

“nEg” is displayed
- escape this procedure or do not use for 15 seconds
To suspend the cycle:
• press for 2 seconds:

3.4 Positive temperature with temperature controlled chilling and storage

To start the cycle:
check that the system is in “stand-by” mode and no other procedure is running
• press to select “PoS” check that the LED is flashing
• press within 60 seconds: end of chilling temperature is displayed
• press or within 15 seconds to modify value setting (setting remains active until another cycle is selected or when the value defined by parameters
r3)
• press within 15 seconds: cycle will start running.
Before running a cycle:
a test is run to check that the needle probe is inserted correctly (refer to paragraph 3.6)
- if the test is Ok the cycle is started
- if the test is negative the cycle is delayed
During blast chilling:
needle probe temperature reading is displayed
• LED is on
parameter r3 defines end of chilling temperature
parameter r5 defines maximum chilling time
parameter r7 defines working setpoint
• press several times:
- remaining chilling time is displayed
- “PoS” is displayed
- displays chiller internal temperature which flashes
- escape this procedure or do not use for 15 seconds
If the temperature detected by the needle probe reaches end of chilling temperature before maximum chilling time has been reached:
the chiller goes into storage mode
“End” is displayed
a buzzer is activated and buzzer time is defined by parameter AA
press a key to turn off the buzzer; press the key again to delete the prompt “End”.
If the temperature detected by the needle probe has not reached end of chilling temperature before maximum chilling time has been reached:
blast chilling will continue
• LED flashes and LED remains on
the buzzer is activated

• press several times:
- to turn off the buzzer
- the extra chilling time elapsed over the maximum blast chilling time is displayed
- displays chiller internal temperature
- “PoS” is displayed
- escape this procedure or do not use for 15 seconds
when the temperature reading detected by the needle probe reaches end of chilling temperature:
- the chiller goes into storage mode
- LED continues to flash and LED continues to remain on
- “End” is displayed
- a buzzer is activated and buzzer time is defined by parameter AA
- - press a key to turn off the buzzer; press the key again to delete the prompt “End”.

<u>During storage:</u>
- chiller internal temperature is displayed
• if chilling results correct, LEDs and remain on; if chilling results to be incorrect, LEDs and are on and LED flashes
parameter r9 defines working setpoint
• press several times:
- “PoS” is displayed
- escape this procedure or do not use for 15 seconds

<u>To suspend the cycle:</u>
• press for 2 seconds:

3.5 Negative temperature with temperature controlled chilling and storage

To start the cycle:
check that the system is in “stand-by” mode and no other procedure is running
• press to select “nEg” check that LED is flashing
• press within 60 seconds: end of chilling temperature is displayed
• press or within 15 seconds to modify value setting (setting remains active until another cycle is selected or when the value defined by parameter
r4 is restored)
• press within 15 seconds: cycle will start running.
If negative temperature blast chilling and storage cycles are not enabled (parameter rb = 0) tag “nEg” is not displayed.

<u>Before running a cycle:</u>

a test is run to check that the needle probe is inserted correctly (refer to paragraph 3.6)
- if the test is Ok the cycle is started
- if the test is negative the cycle is delayed

During blast chilling:
needle probe temperature reading is displayed
• LED is on
parameter r4 defines end of chilling temperature
parameter r6 defines maximum chilling time
parameter r8 defines working setpoint
• press several times:
- remaining chilling time is displayed
"nEg" is displayed
- displays chiller internal temperature which flashes
- escape this procedure or do not use for 15 seconds
If the temperature detected by the needle probe reaches end of chilling temperature before maximum chilling time has been reached:
the chiller goes into storage mode
"End" is displayed
a buzzer is activated and buzzer time is defined by parameter AA
press a key to turn off the buzzer; press the key again to delete the prompt "End".
If the temperature detected by the needle probe has not reached end of chilling temperature before maximum chilling time has been reached:
blast chilling will continue
• LED flashes and LED remains on
the buzzer is activated
• press several times:
- to turn off the buzzer
- the extra chilling time elapsed over the maximum blast chilling time is displayed
- displays chiller internal temperature
"nEg" is displayed
- escape this procedure or do not use for 15 seconds
when the temperature reading detected by the needle probe reaches end of chilling temperature:
- the chiller goes into storage mode
- LED continues to flash and LED continues to remain on
- "End" is displayed
- a buzzer is activated and buzzer time is defined by parameter AA
- press a key to turn off the buzzer; press the key again to delete the prompt "End".
During storage:
- chiller internal temperature is displayed
• if chilling results correct, LEDs and remain on; if chilling results to be incorrect, LEDs and are on and LED flashes
parameter rA defines working setpoint
• press several times:

“nEg” is displayed
- escape this procedure or do not use for 15 seconds
To suspend the cycle:
• press for 2 seconds:

3.6 Test for checking that the needle probe is inserted correctly

Before running a temperature controlled chilling cycle a test is run to check that the needle probe has been inserted correctly.
The test is divided into two steps:
if the first step is OK, the second step is ignored
if the first step results negative, the second step is performed.
The first step results positive when at least for 3 out of 5 times the difference in “the temperature detected by the needle probe - chiller temperature” results greater than the parameter rc (this comparison is run every 10 seconds); if the parameter rc is set at 0, neither the first nor second step of the test are run.
The second step results positive if the difference in “the temperature detected by the needle probe – chiller temperature” is, at least 6 times out of 8, 1 °C / 1 °F greater (in respect to the previous comparison)
(this comparison is run every “rd/8 seconds”).
If the test results positive- OK:
the cycle will start running.
If the test results negative:
the cycle will be delayed.
• LED flashes.
If the power supply is unexpectedly interrupted during testing, when power is restored the test restarts from the beginning.

4 SETTINGS

4.1 Temporary setting of working setpoint during storage

check that storage is running and there are no other procedures running
• press : • LED flashes.
• press or within 15 seconds:
• press or do not use for 15 seconds.
Settings remain active until another cycle is selected or when the value defined by parameter r9 or ra is restored.

4.2 Setting configuration parameters

Parameters are divided into two levels.
To access the first level:
check that the system is in “stand-by” mode and no other procedure is running

• press or for 4 seconds: “PA” is displayed
To access the second level:
access the first level:
• press or to select “PA”
• press :
• press or within 15 seconds to set “-19”
• press or do not use for 15 seconds.
• press or for 4 seconds: “r0” is displayed
To select a parameter:
• press or
To modify a parameter:
• press :
• press or within 15 seconds:
• press or do not use for 15 seconds.
To escape this procedure:
• press and for 4 seconds or do not use for 60 seconds.
Cut off power to the system after modifying parameters.

4.3 Restoring default values for configuration parameters

check that the system is in “stand-by” mode and no other procedure is running
• press or for 4 seconds: “PA” is displayed
• press :
• press or within 15 seconds to set “743”
• press or do not use for 15 seconds.
• press or for 4 seconds: “dEF” is displayed
• press :
• press or within 15 seconds to set “149”
• press or do not use for 15 seconds. “dEF” flashes on the display for 4 seconds after which the system escapes this procedure
• cut off power to the system .

Check that the default values for the parameters are correct and if the probes are type NTC.

5 PROMPTS

5.1 Prompts

LED	MEANING
	LED timer controlled blast chilling • if this LED is on and LED is off, a timer controlled blast chilling cycle is running • if this LED is on and LED is on, storage is running after a timer

	controlled blast chilling cycle has been completed if this LED is flashing, a timer controlled blast chilling and storage cycle has been selected.
	LED temperature controlled blast chilling • if this LED is on and LED is off, a temperature controlled blast chilling cycle is running • if this LED is on and LED is on, storage is running after a temperature controlled blast chilling cycle has been completed if this LED is flashing, a temperature controlled blast chilling and storage cycle has been selected. if this LED comes on for ½ a second every 3 seconds, a needle probe test is being run • if this LED is flashing and LED is on, needle probe testing results negative (parameters rc and rd) the cycle switches to timer controlled blast chilling; refer to paragraph 3.6 • if this LED is flashing and is on, chilling has not been completed and blast chilling will continue. • if this LED is flashing and LEDs and are on, blast chilling has not been completed but the system is now in storage mode
	LED storage if on, the chiller is in storage mode if this LED is flashing, the working setpoint is being modified during storage (refer to paragraph 4.1)
 **°C**	LED alarms if on, an alarm has been activated LED degree Celsius if on, the unit of measurement is in degrees Celsius (parameter P2)
°F	LED degrees Fahrenheit if on, the unit of measurement is in degrees Fahrenheit (parameter P2)
Decimal point	point LED minute if flashing, the unit of measure displayed is in minutes

CODE	MEANING
- d -	- d - defrosting or dewatering is running

6 Alarms

6.1 Alarm prompts

CODE	MEANING
AL	Minimum temperature alarm Remedies: • check chiller internal temperature • refer to parameters A1 and A2 Results : • the system continues to work regularly
AH	Maximum temperature alarm Remedies: • check chiller internal temperature • refer to parameters A3 and A4 Results : • the system continues to work regularly
id	Alarm micro-port input (only when in "stand-by" and if parameter i0 is set at 0 or 1) Remedies: • identify the causes which enabled this input • refer to parameters i0 and i1 Results : • the resulting condition with parameter i0
iA	Alarm compressor protection input (only if parameter i0 is set at 2) Remedies: • identify the causes which enabled this input • refer to parameters i0 and i1 Results : • the compressor stops

Once the causes which have tripped an alarm are identified and eliminated, the system returns to normal and regular functioning.

7 DIAGNOSTIC SYSTEM

7.1 Diagnostic system

CODE	MEANING
	Error in chiller compartment probe Remedies:

Pr1	• access parameter P0 • check that the probe is intact • check the connection system – probe • check chiller internal temperature Results when the error occurs with the system in "stand-by": • if parameter C11 is set at 0, no cycle can be activated • if parameter C11 is set at 1, the needle probe works as the chiller compartment probe and only timer controlled cycles can be activated Results when the error occurs during a timer controlled chilling cycle: • if parameter C11 is set at 0, the cycle running is suspended • if parameter C11 is set at 1, the needle probe works as the chiller compartment probe and blast chilling continues Results when the error occurs during a temperature controlled chilling cycle: • if parameter C11 is set at 0, the cycle running is suspended • if parameter C11 is set at 1, the probe works both as needle probe and chiller compartment probe and blast chilling continues Results when the error occurs during storage: • if parameter C11 is set at 0, the compressor is managed by parameters C4, C5 and C6 • if parameter C11 is set at 1, the needle probe works as the chiller compartment probe and storage continues
Pr2	Error in needle probe Remedies: • proceed as above but referring to needle probe Results when the error occurs with the system in "stand-by": • only timer controlled chilling cycles can be activated Results when the error occurs during a timer controlled chilling cycle: blast chilling will continue Results when the error occurs during a temperature controlled chilling cycle: blast chilling will continue as a timer controlled cycle Results when the error occurs during storage: • storage continues

8 TECHNICAL SPECIFICATIONS

8.1 Technical specifications

Casing: grey coloured and fireproof

Degree of protection of faceplate: IP 65.
Connections: screw terminals, (power supply, inputs and outputs), 6-pole connector (serial port upon request); pull-out terminals (power supply, inputs and outputs) upon request.
Workplace temperature: from 0 to 55°C (10….. 90% humidity without condensation).
Power supply: 230 VCA, 50/60 Hz, 3 VA (approximately); 115 VCA upon request.
Alarm buzzer: incorporated.
Temperature reading inputs: 2 (chiller compartment probe and needle probe) per probe
PTC/NTC.
Digital inputs: 1 (microport / multipurpose) per NO/NC contact (dry contact, 5 V1 mA).
Temperature reading range: from –50°C to 150 °C for PTC probe, -40°C to 105°C for NTC probe.
Resolution: 0.1 °C71 °C/1 °F
Digital outputs: 2 relays
- **compressor relay:** 16 A res. @ 250 VCA (contact NO) for versions 12 VCA/CC and 12-24 VCA/CC; 8 A res. @ 250 VCA otherwise
- **relay defrosting / evaporator fan:** 8 A res. @ 250 VCA (change-over contact).

Maximum allowable current across loads is 10 A.
Serial port: port for communicating with the monitoring system (through a serial interface, via TTL – transistor to transistor logic – with MODBUS communication protocol) or with programming key; available upon request.

9 WORKING SETPOINT AND CONFIGURATION PARAMETERS

9.1 First level configuration parameters

PARAM	MIN.	MAX.	U.M.	DEF.	MAIN REGULATOR
r0	0.1	15.0	°C/°F(1)	2.0	Differential for parameters r7, r8, r9 and rA
r1	1	600	Min.	90	time for positive temperature timer controlled blast chilling
r2	1	600	Min.	240	time for negative temperature timer controlled blast chilling
r3	-99.0	-99.0	°C/°F(1)	3.0	end of chilling temperature for positive temperature chilling (temperature detected by the needle probe)
r4	-99.0	-99.0	°C/°F(1)	-18	end of chilling temperature for

					negative temperature chilling (temperature detected by the needle probe)
r5	1	600	Min.	90	maximum time for positive temperature controlled blast chilling
r6	1	600	Min.	240	maximum time for negative temperature controlled blast chilling
r7	-99.0	-99.0	°C/°F(1)	0.0	working setpoint during positive temperature blast chilling (chiller compartment temperature)
r8	-99.0	-99.0	°C/°F(1)	-40	working setpoint during negative temperature blast chilling (chiller compartment temperature)
r9	-99.0	-99.0	°C/°F(1)	2.0	working setpoint during storage after positive temperature blast chilling (chiller compartment temperature)
rA	-99.0	-99.0	°C/°F(1)	-20.0	working setpoint during storage after negative temperature blast chilling (chiller compartment temperature)

9.2 Second level configuration parameters

PARAM	MIN.	MAX.	U.M.	DEF.	TEMPERATURE READING INPUTS
CA1	-25.0	25.0	°C/°F(1)	0.0	offset chiller compartment probe
CA2	-25.0	25.0	°C/°F(1)	0.0	offset needle probe
P0	0	1	---	0	type of probe 0 = PTC 1 = NTC
P1	0	1	---	1	decimal point degree Celsius (for the reading displayed during normal functioning) 1 = yes

P2	0	1	---	0	unit of measurement temperature (2) 0 = °C 1 = °F
P3	0	1	---	1	needle probe enabled 1 = yes

PARAM	MIN.	MAX.	U.M.	DEF.	MAIN REGULATOR
r0	0.1	15.0	°C/°F(1)	2.0	differential for parameters r7, r8, r9 and rA
r1	1	600	min	90	time for positive temperature timer controlled blast chilling
r2	1	600	min	240	time for negative temperature timer controlled blast chilling
r3	-99.0	99	°C/°F(1)	3.0	end of chilling temperature for positive temperature chilling (temperature detected by the needle probe)
r4	-99.0	99	°C/°F(1)	-18.0	end of chilling temperature for negative temperature chilling (temperature detected by the needle probe)
r5	1	600	min	90	maximum time for positive temperature controlled blast chilling
r6	1	600	min	240	maximum time for negative temperature controlled blast chilling
r7	-99.0	99	°C/°F(1)	0.0	working setpoint during positive temperature blast chilling (chiller compartment temperature)
r8	-99.0	99	°C/°F(1)	-40.0	working setpoint during negative temperature blast chilling (chiller compartment temperature)
r9	-99,0	99	°C/°F(1)	2.0	working setpoint during storage after positive temperature blast chilling (chiller compartment temperature)

rA	-99.0	99	°C/°F(1)	-20.0	working setpoint during storage after negative temperature blast chilling (chiller compartment temperature)
rb	0	1	---	1	enable negative blast chilling cycle and storage 1 = yes
rc	0.0	99	°C/°F(1)	5.0	difference (temperature detected by the needle probe – chiller compartment probe" for the first step when testing the needle probe is inserted correctly (refer to paragraph 3.6) 0= test not run (neither the first nor second step)
rd	1	99	S	60	during the second step of the test to check that the needle probe is inserted correctly (refer to paragraph 3.6)

PARAM	**MIN.**	**MAX.**	**U.M.**	**DEF.**	**COMPRESSOR PROTECTIONS**
C0	0	240	min	0	delay in compressor activation after a cycle has been started; delay in compressor activation after the power supply has been restored.
C1	0	240	Min	5	minimum time between two consecutive compressor start-ups.
C2	0	240	Min	3	minimum duration of compressor shut-down
C3	0	240	S	0	minimum duration of compressor start-up
C4	0	240	Min	10	compressor shut-down time during an error alarm chiller compartment probe when in storage mode; refer to C5 and

					C6 (only if C11 =0)
C5	0	240	-{}-Min	10	compressor start-up time during an error alarm chiller compartment probe when in storage mode; refer to C4 (only if C11 =0)
C6	0.0	240	min	20	compressor start-up time during an error alarm chiller compartment probe when in negative temperature storage mode; refer to C4 (only if C11 =0)
C11	0.0	200.0	°C/°F (1)	90.00	needle probe function during error chiller compartment probe 0 = needle probe IF THE ERROR OCCURS WHEN IN "STAND-BY" – it is not possible to run a cycle IF THE ERROR OCCURS DURING EITHER TIMER OR TEMPERATURE CONTROLLED BLAST CHILLING – the cycle is suspended IF THE ERROR OCCURS DURING STORAGE 1 = both as needle probe and chiller compartment probe IF THE ERROR OCCURS WHEN IN "STAND-BY" – the needle probe functions as chiller compartment probe and only timer controlled cycles can be run IF THE ERROR OCCURS DURING A TIMER CONTROLLED BLAST CHILLING CYCLE – the needle probe functions as the chiller compartment probe and chilling continues

					IF THE ERROR OCCURS DURING A TEMPERATURE CONTROLLED BLAST CHILLING CYCLE – the needle probe functions as both needle probe and chiller compartment probe and the blast chilling cycle continues; we recommend that parameter i0 is set to 2 (COMPRESSOR PROTECTION) IF THE ERROR OCCURS DURING STORAGE – the needle probe functions as the chiller compartment probe and storage continues

PARAM	MIN.	MAX.	U.M.	DEF.	DEFROSTING
d0	0	99	h	8	defrosting interval (3) 0 = interval defrosting is never activated
d3	0	99	min	30	defrosting time 0 = defrosting is never activated
d7	0	15	min	2	dewatering time

PARAM	MIN.	MAX.	U.M.	DEF.	TEMPERATURE ALARMS
A1	0	99.0	°C/°F (1)	10.0	temperature below alarm limit the minimum temperature alarm is activated; refer to A2 (5)
A2	0.0	1	---	1	type of minimum temperature alarm 0 = no alarm 1 = refers to parameters r9 and rA (namely “r9 – A1” and “rA – A1”)
A4	0.0	99.0	°C/°F(1)	10.0	temperature above alarm limit the maximum temperature alarm is activated; refer to A5 (5)

A5	0	1	---	1	type of maximum temperature alarm 0 = no alarm 1 = refers to parameters r9 and rA (namely “r9 + A4” and “rA + A4”)
A6	0	240	min	15	delay in temperature alarm from when chiller goes into storage mode
A7	0	240	min	15	temperature alarm delay
A8	0	240	min	15	delay in maximum temperature alarm after dewatering has terminated (6)
A9	0	240	min	15	delay in maximum temperature alarm from when the microport input is disabled (only if i0=0 or 1) (7)
AA	0	240	s	5	buzzer duration time when chilling has been completed

PARAM	**MIN.**	**MAX.**	**U.M.**	**DEF.**	**EVAPORATOR FAN only if U0 = 1**
F0	0	2	---	2	evaporator fan during blast chilling 0 = off 1 = on 2 = in parallel with compressor
F2	0	2	---	1	evaporator fan during storage 0 = off 1 = on
F8	0	99	min	0	delay in evaporator fan during defrosting from when one of the following digital input functions

PARAM	**MIN.**	**MAX.**	**U.M.**	**DEF.**	**DIGITAL INPUTS**
i0	0	2	---	1	is enabled 0 = INPUT MICROPORT – in this case parameters i1, i2 and i3 are active; when the input is

					enabled the evaporator fan is turned off (maximum for the time i3 or when the input is disabled) (8) 1 = INPUT MICROPORT – in this case parameters i1, i2 and i3 are active; when the input is enabled the compressor is shut-down and the evaporator fan is turned off (maximum for the time i3 or when the input is disabled) (8) (9) 2 = COMPRESSOR PROTECTION – in this case parameters i1 and i7 are active; the compressor is shut-down, code "iA" flashes on the display and the buzzer is activated (until the input is disabled)
i1	0	2	---	2	type of contact for the digital input 0 = NO (input enabled with contact closed) 1 = NO (input enabled with contact opened) 2 = no input
i2	-1	120	min	30	delay in prompt for alarm input microport (only if i0 = 0 or 1) -1 = no alarm prompt
i3	-1	120	min	15	maximum duration caused when the input microport is enabled (only if i0 = 0 or 1) -1 = the resulting condition remains until input is disabled
i7	0	120	min	0	delay in compressor from when the input compressor protection is disabled (only if i0 = 2)

PARAM	MIN.	MAX.	U.M.	DEF.	
u0	0	1	---	1	function managed by relay K2 (refer to paragraph 2.3) 0 = defrosting 1 = evaporator fan

PARAM	MIN.	MAX.	U.M.	DEF.	SERIAL NETWORK (MODBUS)
LA	1	247	---	247	
Lb	0	3	---	2	baud rate 0=2400 baud 1=4800 baud 2=9600 baud 3=19200 baud
LP	0	2	---	2	equality 0= none 1=odd 2=even

PARAM	MIN.	MAX.	U.M.	DEF.	RESERVED
E9	0	1	---	1	reserved

(1) the unit of measurement is managed by parameter P2
(2) set appropriate regulator parameters after modifying parameter P2
(3) the system memorises defrosting intervals every 30 minutes; a modification to parameter d0 comes into effect after the defrosting interval has been completed or from when manual defrosting is activated
(4) temperature alarms are only enabled when the chiller is in storage mode
(5) the parameter differential is 2.0 °C / 4 °F
(6) during defrosting and dewatering temperature alarms are inactive if activated after defrosting has commenced
(7) when the input microport is enabled the maximum temperature alarm is inactive if activated after the input has been enabled
(8) the evaporator fan is turned off as long as defrosting is not running
(9) the compressor and the evaporator fan are shut-down 10 seconds after the input is enabled