ELECTRIC OVEN

USE AND INSTRUCTION MANUAL
MODD. EKF 711 P – EKF 664 P

rev. 0

TECNOEKA S.r.l.
Via Marco Polo, n.11 - 35010 Borgoricco (Padova) Italy
Tel. +39.049.9300344 – +39.049.5791479 Fax 049.5794387
www.tecnoeka.com E-mail: info@tecnoeka.com

TECNOEKA SRL
VIA MARCO POLO, 11 - 35010 BORGORICCO - PADOVA - ITALY
TEL. +39 049 5791479 +39 049 9300344 - FAX +39 049 5794387
E-MAIL: INFO@TECNOEKA.COM - WWW.TECNOEKA.COM - WWW.TECNOEKA.RU
COD. FISC. - P.IVA 00747580280 - REA N° 133205 - CAP. SOC. EURO 119.000,00 I.V.

CE DECLARATION OF CONFORMITY

Annexed document II A, of directive 2006/42/EC

Manufacturer's name	TECNOEKA Srl
Manufacturer's address	Via Marco Polo, 11 - 35010 Borgoricco (PD)
Manager's name of technical file	Minotto Lorenzo
Manager's address of technical file	Via Marco Polo, 11 - 35010 Borgoricco (PD)
Type of product	Electronic oven
Purpose of the product	Cooking food
Model	EKF 711 P – EKF 664 P

TECNOEKA Srl declares that the mentioned above products meet the following safety regulations:
Low voltage directive 2006/95/CE
Electromagnetic compatibility Directive 2004/108/CE.

TECNOEKA Srl declares that the mentioned above products meet the following harmonised standards:
CEI EN 60335-1 ; CEI EN 60335-2-42
CEI EN 55014-1 ; CEI EN 61000-3-2 ; CEI EN 61000-3-3 ; CEI EN 62233

TECNOEKA Srl declares that the mentioned above products meet the following directives:
Machine Directive 2006/42/CE;
Directive on the general safety of products 2001/95/CE;
Directive on the restriction in the use of dangerous substances in electrical and electronic appliances 2011/65/CE;
Directive on waste from electrical and electronic appliances 2002/96/CE (RAEE).

TECNOEKA Srl declares that the mentioned above products meet the
CE 1907/2006 (REACH) Regulation

Borgoricco, 26/02/2015.

Signature of a Representative of the Board of directors
(CRISTINA LORA)

Index

1. Technical service

2. General warnings

3. Technical specifications

4. Instructions for the installer

5. Use instructions (for the user)

6. Residual risks (for the user)

7. How to use the control panel

8. Oven cooking

9. Cleaning

10. Maintenance

11. Technical service

12. Information to the consumers

13. Wiring layout

14. The Warranty

1. Technical service

A technical check-up once or twice a year helps prolong the life of the appliance and guarantees better operation.
Make sure that assistance is carried out solely and exclusively by qualified personnel.
For any spare parts orders or for any information about the appliance, always mention the serial number and model (data indicated on the "technical data" plate at the rear of the oven).

2. General warnings

Very important!: keep this instruction book together with the appliance for future consultation.
These warnings were drafted for your safety and for that of others. Please read them carefully before installing or using the appliance:

- If, on receipt of the goods, the **packaging** is damaged, write the following on the delivery note: "**I REVERSE THE RIGHT TO CONTROL THE GOODS**", specify the damage and get the driver to sign in acceptance; send a claim in writing to the seller within 4 calendar days from the date of receipt. No claim shall be accepted after such period.
- The appliance is intended for professional use and must be utilised by qualified personnel trained to use it.
- Any modification which may be necessary on the electrical system to enable installation of the appliance, must be carried out solely by competent personnel.
- It is dangerous to modify or attempt to modify the characteristics of this appliance.
- Never clean the appliance with direct water jets, because, if any water enters, it could limit the machine's safety .
- Before doing any maintenance or cleaning jobs, disconnect the appliance from the electrical mains and allow it to cool.
- Do not attempt to carry out the periodic controls or any repairs by yourself. Contact the nearest Service Centre and use only original spare parts.

N.B.: Improper or incorrect use and failure to observe the installation instructions shall release the manufacture from all responsibility. In this connection, the directives in the "POSITIONING" paragraph must be strictly observed.

3. Technical specifications

Dimensions of appliance LxDxH (mm)	935x930x825
Weight (Kg)	96,4
Convection heating element (kW)	4 (x2)
Max. absorbed power (kW)	8,4
Power supply voltage (V)	AC 400V 3N (50Hz)
Power cable diameter	5x2,5 mm^2
Type of cable	H07RN-F
Connecting electric cable	Tipo Y
Class	I
Degree of protection against humidity	IPX3

The noise level of the appliance in operation is below 70 dB (A).
The "technical data" plate is positioned on the rear panel of the appliance.

4. Instructions for the installer

The following instructions are aimed at the qualified installer, to ensure that he carries out the installation, adjustment and maintenance operations as correctly as possible and according to current legal regulations. Any operation must be performed with electrical power cut to the appliance. Before using the appliance, carefully remove the special adhesive film protecting the parts in stainless steel. Do not leave any glue residues on the surfaces. If necessary, remove them at once, with an appropriate solvent.

Positioning - Position the appliance perfectly horizontally on a table or similar support (the table or support must be at least 85 cm above the floor). Position it at a distance of not less than 10 cm from the side and rear walls, to enable natural ventilating air to circulate freely around it. The appliance is ventilated through specific openings on the metal walls of the outer housing , and ensures efficiency and long-life. For this reason it is strictly forbidden to obstruct these ventilation openings, even partially or for short periods. **Failure to observe this specific prohibition releases the manufacturer of the appliance from all responsibility and immediately voids any guarantee rights for the said appliance,** because its constructive conformity has been voluntarily compromised. Furthermore, the appliance is not suitable for embedding and for grouped positioning with other identical appliances.

Electrical connection - The appliance must be connected to the electrical mains according to current legal regulations. Before making the connection, make sure of the following:

- the voltage and frequency values of the power supply system match the values on the "technical data" plate affixed on the appliance;
- the limiting valve and the system are able to support the appliance's load (see the "technical data" plate);
- **the power supply system has an adequate earth connection according to current legal regulations;**
- a omnipolar switch with minimum between-contacts aperture of the overvoltage category III (4000 V), sized to the load and conforming to current legal regulations, is fitted between the appliance and the mains in the direct connection to the mains;
- the omnipolar switch used for connection is easy to reach when the appliance is installed;
- **the yellow/green earth wire is not interrupted by the switch;**
- the power supply, when the appliance is operating, must not deviate from the rated voltage value by ±10%.
- make sure that after inserting the power supply cord into the terminal block it does not come into contact with any of the cooking range's hot parts.
- **if the supply cable is damaged then it must be replaced by the manufacturer or by your technical support or by a qualified person to avoid any risk**

Connecting the power cable - To reach the power terminal board remove the left side of the appliance. Loosen the cable-clamp on the back (at the bottom) of the appliance and pass the cable through up to near to the terminal board. Locate the leads against the terminal board so that the earth lead is the last to detach from its terminal in the event of reverse pulling. Connect the 3 **phase** leads to the terminals marked **"1" "2"** and **"3"**, the **neutral** lead to the terminal marked **"4"** or **"5"** and the **earth** lead to the terminal marked ⏚ as shown in the following layout:

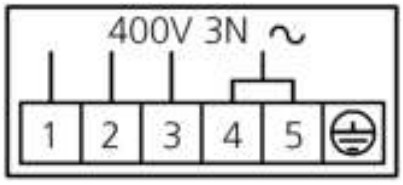

(this electrical connection lay-out is located near the power supply terminal board). Tighten the cable gripper and re-fit the left side-panel of the appliance.
The appliance must be connected to an **equipotential system** whose efficiency must first be checked according to current legal regulations.
This connection must be made between different appliances by using the appropriate terminal marked with the symbol ⏚. The equipotential conductor must have a minimum diameter of 2,5 mm^2 The equipotential terminal is at the rear of the appliance.

Safety thermal breaker - The appliance has a manually reset safety thermal breaker. It protects against excessive dangerous over-temperatures which could be accidentally generated inside the appliance. If the device is tripped, it interrupts electrical power to the appliance and thus prevents it from operating. To access this device, remove the left side-panel of the appliance.

5. Use instructions (for the user)

This appliance is not intended for use by persons (including children) with reduced phycal, sensory or mental capabilities, or lack of experience and knowledge. Unless they have beengiven supervision or instruction concerning use of appliance by a person responsible for their safety. Children should be supervised to ensure that they do not play with the appliance.
For first use, we advise you to let the appliance to run load-free at maximum temperature for about one hour. In this way, any unpleasant smells due to thermal insulation and residual work grease are eliminated. This appliance must be used solely for the purpose for which it was expressly designed, i.e. cooking foods in the oven. Any other use is considered unsuitable.
The appliance can be used: for all oven cooking of deserts, pizzas, meat, fish, vegetables, as well as for gratinating, and for re-conditioning cooled and frozen foods. When placing food in the cooking compartment, leave a space of at least 40 mm between pans in order not to over-obstruct air circulation. Do not use pans with higher than necessary edges: edges are barriers which prevent the circulation of hot air. Warm up the oven before every cooking operation to obtain maximum uniformity. Do not salt foods in the cooking compartment.

6. Residual risks (for the user)

After a cooking operation, open the door cautiously, to avoid a violent outflow of heat which could cause burns. While the oven is in operation, pay attention to the hot zones (marked on the appliance) of its external surfaces. Place the machine on a bench or similar support, at a height of at least 85 cm from the floor. The bench or support must be able to support the weight of the machine and house it correctly. The appliance contains electrical parts and must never be washed with a jet of water or steam. The appliance is electrically connected: before attempting any cleaning operation, cut power to the appliance. To prevent incorrect connection of the appliance, the relevant electrical and water connections are marked by identification plates. If the internal glass panel of the door has to be cleaned, it must be dismantled with the help of a second operator: one operator supports the glass panel, while the other unscrews its securing screws.

7. How to use the control panel

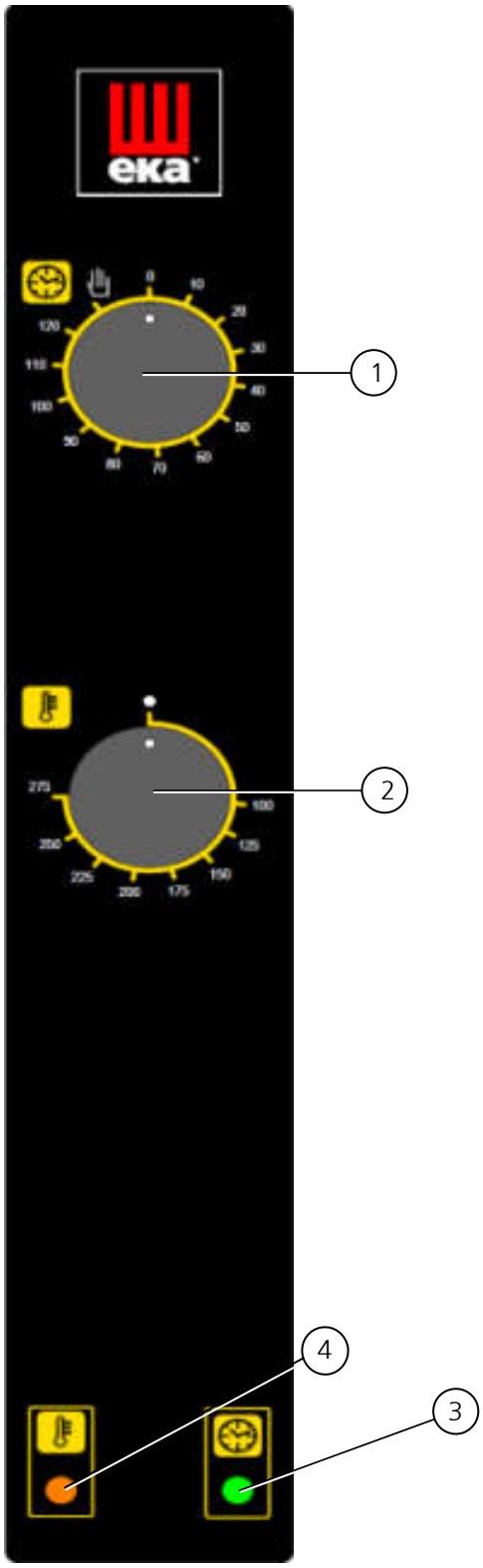

1. "End of cooking" programming knob
2. Control thermostat knob
3. "End of cooking" programmer indicator light
4. Control thermostat indicator light



Fig. 1



Fig. 2

Programming cooking time - To run the oven, turn the programmer knob (Fig. 1) in line with symbol ✋ (continuous operation) or in line with the selected cooking time (up to 120 minutes). In the second case, end of cooking is signalled by the oven switching OFF automatically.
Programming cooking temperature - Turn the knob of the adjustment thermostat (Fig. 2) in line with the temperature selected for cooking.
"End of cooking" programmer indicator light - The programmer green indicator light indicate that the oven is operating and that cooking time is active.
Control thermostat indicator light - The control thermostat orange indicator light goes OFF whenever the programmed temperature is reached inside the cooking compartment. It lights up again when the thermostat is tripped to re-establish this temperature.
Oven internal light - The light is always on when the oven is operating.
To switch off the oven - Turn OFF the knobs of the "end of cooking" programmer and of the thermostat. When you have finished using the oven, cut out electric power.

8. Oven cooking

For cooking, before putting food in, warm up the oven to the required temperature. When the oven reaches the temperature, put the food in and check cooking time. Switch off the oven 5 minutes before the theoretical time in order to recover stored heat.
Convection cooking (dry heat) - Operate the oven and turn the thermo state knob to the desired temperature.
De freezing - Operate the oven and turn the thermo state knob and the humidifier knob in correspondence of position OFF (•).

9. Cleaning (WARNING: Cut power to the appliance before every operation)

General cleaning - Clean the oven when it is cold. Wash enamelled parts with lukewarm water and soap, do not use abrasive products, steel wool, or acids, which could ruin them. To clean the steel parts, do not use products containing chlorine (sodium hypochlorite, hydrochloric acid, etc) even if diluted. Use specific off-the-shelf products or a little hot vinegar. Rinse thoroughly with water and dry with a soft cloth. Clean the glass door of the oven with hot water only, and do not use rough cloths. Do not allow foods (especially acid foods such as salt, vinegar, lemon, etc) to stagnate on the stainless steel parts, because they could deteriorate. Do not wash the appliance with direct jets of water, because if water enters, this could limit the appliance's safety. Do not use corrosive substances (e.g. hydrochloric acid) to clean the oven' s support bench.

Cleaning the oven - It is good practice to clean the oven interior at the end of every day of duty. In this way it will be easier to remove cooking residues, preventing them from burning when the oven is next used. Clean it accurately with hot water and soap or with the appropriate off-the-shelf products.

Cleaning the door - The glass panel of the door facing inwards toward cooking compartment can be cleaned with the same type of degreasing product used to clean the compartment. Otherwise, you can use normal glass cleaning product (non toxic). A common glass detergent can be used also to clean the glass panel of the door facing outward. In all cases, you may just use tepid soapy water. After rinsing, thoroughly dry the glass surface with a soft cloth. If opaque sections form between the two glass panels of the door, they can be eliminated after dismantling the internal glass panel.

Cleaning the fans - The fans must be periodically cleaned with specific anti-lime scale products. All the parts must be carefully cleaned, removing all lime scale deposits. To have access to the fans remove the fan casing after removing the screws that fix it to the cooking chamber. When cleaning is complete, replace the casing and screws.

Cleaning the door seal - For hygiene and good operations, it is good practice to clean the door seal at the end of each day's work. It should be carefully washed with warm soapy water, rinsed and dried with a soft cloth. Any incrustations or food deposits must be carefully removed, without using sharp metal tools which could irreparably damage the seal.

10. Maintenance

General information - A periodic control (at least once a year) of the appliance aids to guarantee long life and correct operations. Any sort of maintenance work on the appliance must be done exclusively by technically qualified operators who have been trained in the maintenance work on this appliance. Before beginning any sort of maintenance work on the appliance, turn the power supply off (at the magnetothermal safety switch upstream from the appliance) and let it cool down. Access is gained to the inside components that could require maintenance work by removing the left side of the appliance.

Changing the lighting lamp in the cooking chamber - The lamp is housed between the two door glasses; to replace it remove the internal glass as described in the paragraph: "Cleaning the door". After removing the internal glass, replace the lamp with another with the same specifications: 12V 35W 300°C (this is a halogen lamp and should not be touched with your bare hands).

Changing the door seal - The door seal has a rigid profile with 3 fixing tabs. The profile must be fitted into the guide on the face of the cooking chamber. The rectangular seal fits perfectly into the frame of the guide and, therefore, the seal profile fits perfectly onto the face of the cooking chamber. To change the seal, remove the old one from the guide by pulling hard at the four corners. Clean any dirt from the guide and introduce the new seal (to make this operation easier, we advise dampening the seal profile with soapy water).

Resetting the thermal breaker safety device - This device is reached by removing the left side of the appliance and can be reset by pressing the red key right down (which is marked by a special adhesive label), which is inside the electric components compartment.

Possible faults

Type of fault	Cause	Corrective action
Control panel completely off (the oven does not work)	- Incorrect electric connections to the mains	- Check the mains connection
	- No mains voltage	- Restore mains voltage
	- Thermal break safety device tripped	- Reset the thermal break safety device
Cooking cycle set: the oven does not work	- Door open or ajar	- Close the door
	- Damaged magnetic sensor	- Contact a qualified technician to repair the sensor
Door closed: steam comes out of the seal	- Seal not fitted correctly	- Check the seal fitting
	- Damaged seal	- Contact a qualified technician to repair the seal
	- Handle prong loosened	- Contact a qualified technician to repair the prong
The oven does not cook evenly	- One of the motors is blocked or turns slowly	- Contact a qualified technician to repair the motor
	- The motors do not go into reverse	- Contact a qualified technician to repair the motor
	- Heating element not powered or is damaged	- Contact a qualified technician to repair the element
Lighting lamp in the cooking chamber does not work	- Damaged lamp	- Change the lamp
	- Damaged lamp feeder	- Contact a qualified technician to repair the feeder
The thermo safety device turns on in continuous	- Device damaged	- Contact a qualified technician to repair the feeder
	- Regulating thermo state damaged	- Contact a qualified technician to repair the feeder

11. Technical service

Before leaving the factory, the appliance was completely regulated and tested by expert specialised personnel to guarantee the best operating results.
All repairs and settings must be performed with utmost care and attention, respecting national safety regulations in force. Always contact your retailer or our nearest Service Centre, giving details of the problem, the appliance model and the serial number (on the rating plate on the rear panel). For any maintenance the user can contact Tecnoeka by calling the telephone numbers on the cover or going to www.tecnoeka.com.

12. Informations to the consumers

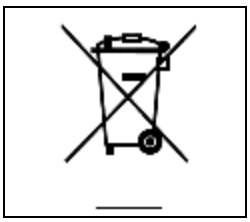

Further to Directive 2002/96/EC, the symbol of the crossed rubbish skip on the appliance means that at the end of its life, the product must be disposed of separately from the other rubbish. The user must hand the appliance to a specialised waste collection centre for electric and electronic equipment.
The separate collection of the rubbish and subsequent treatment, recovery and disposal help to produce other equipment using recycled materials, reducing the negative effects on the environment and public health, which would be caused by incorrect management of the rubbish. Should the user dispose of the product abusively, administrative sanctions would be applied.

13. Wiring layout

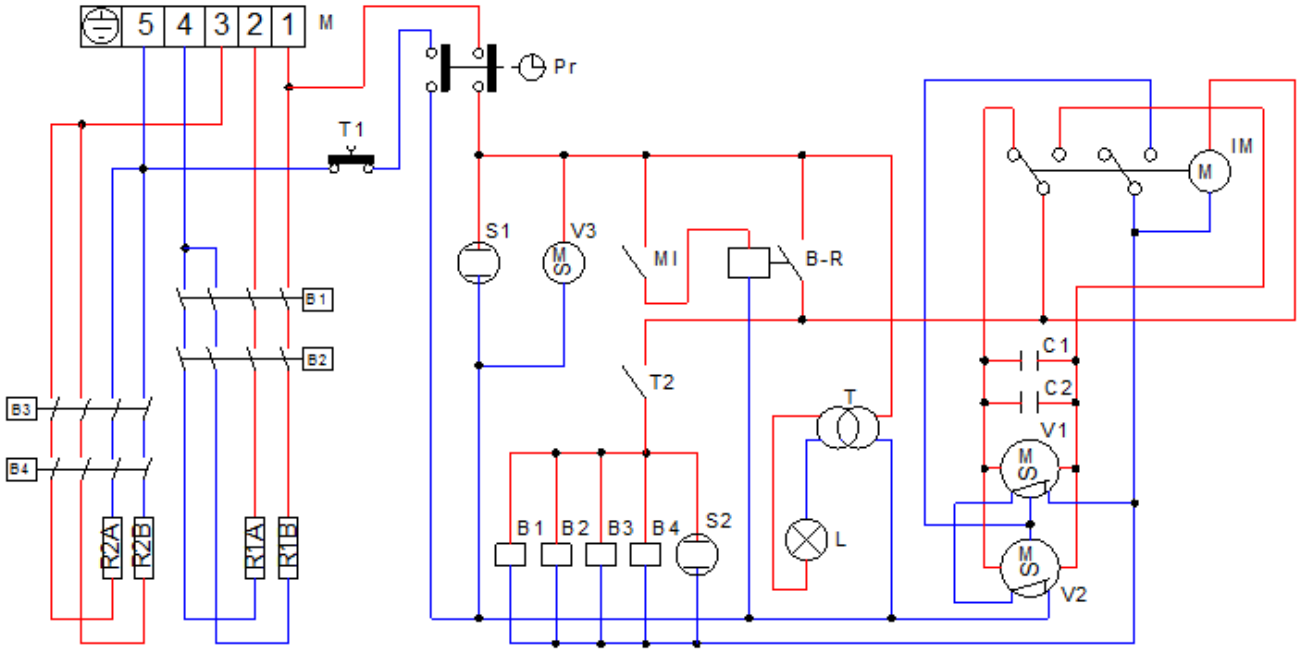

Key

M	Power terminal board	MI	Door microswitch
Pr	"End of cooking" programmer	B1-B2-B3-B4	Contactor coil
T1	Safety thermostat	B-R	Contactor Relais
T2	Oven thermostat	T	Transformer for oven lamp
S1	Programmer indicator light	L	Oven lighting lamp
S2	Thermostat indicator light	V1-V2	Radial motoventilators
IM	Operating direction reversing element	V3	Tangential motorised ventilator
C1-C2	Capacitors	R1-R2	Circular heating elements

14. The Warranty

Your appliance is covered by warranty. The seller will replace or repair (and his decision will be final), free of charge for the customer, only those parts that are defective due to a manufacturing fault on condition that, under penalty of forfeiture:

- for domestic equipment, the customer notifies the fault within two months from the date when he/she discovered it and anyway within 2 years form the date of purchase;
- for professional equipment, the customer notifies the fault within 8 days from the date when he/she discovered it and anyway within 12 months from the date of purchase,

by registered letter with acknowledgement of receipt and enclosing the invoice or receipt proving the purchase.
Apart from the case when the customer cannot produce the invoice or receipt proving the purchase or when the above-mentioned terms are not complied with, the **warranty is expressly excluded** in the following cases:

1) faults or breakage caused by the transport;
2) wrong or incorrect installation of the product (for instance because of insufficient draught of the flue or exhausts) in light of the instructions given in the user's handbook supplied with the product;
3) inadequate or abnormal electrical, hydraulic and/or gas supplies;
4) carelessness, negligence or incompetence in using the product in light of the instructions given in the user's handbook supplied with the product;
5) use of the product for uses different from the one for which it was built or anyway in a manner not compliant with the instructions given in the user's handbook supplied with the product;
6) tampering with the product;
7) adjustments and/or maintenance and/or repairs carried out by unauthorised personnel and/or with non original spare parts;
8) inadequate or careless maintenance of the product in contrast with the user's handbook supplied with the product;
9) damages caused by fire, natural disasters and accident as well as by any cause not attributable to TECNOEKA SRL.

The warranty explicitly excludes: varnished or enamelled parts, knobs, handles, movable or removable plastic parts, bulbs, glass parts, refractories and any accessories.
TECNOEKA SRL cannot be held responsible for any damages, either direct or indirect, caused by the product breaking down or following its non-use.
Any repairs carried out during the warranty do not cause said warranty to be extended or renewed.
Nobody is authorised to modify the terms and conditions of the warranty or to issue new verbal or written warranties.
The warranty is valid only for appliances installed in the European Union.
Any dispute shall be settled by the competent Court in Padua.

Warning for the Buyer:

1. the cooking appliance is designed only for cooking purposes while the heating appliance is designed only for heating domestic environments;
2. TECNOEKA S.r.l. does not install the appliances; the seller shall be responsible for any installation carried out;
3. TECNOEKA S.r.l. cannot be held responsible for any damages, either direct or indirect, to people, pets or property caused by the appliance breaking down or following its non-use.

The Manufacturer cannot be held responsible for any inaccuracies due to misprints or mistakes in copying in this handbook. The Manufacturer reserves the right to modify the products as he deems fit, also in the interest of the user, without affecting the vital characteristics of functionality and safety.