ELECTRONIC OVEN

ORIGINAL OPERATING AND INSTRUCTION MANUAL
MODELS EKF 664 TC – EKF 711 TC – EKF 1064 TC
EKF 1111 TC – EKF 1664 TC – EKF 2011 TC

rev. 4

TECNOEKA S.r.l.
Via Marco Polo, n.11 - 35010 Borgoricco (Padova) Italy
Tel. +39.049.9300344 – +39.049.5791479 Fax +39.049.5794387
www.tecnoeka.com Email: info@tecnoeka.com

Prodotti mirati per Ristorazioni, Pasticcerie, Panetterie e Gastronomie

TECNOEKA Srl
Via Marco Polo, 11
35010 Borgoricco (PD)
Tel. +39 049 5791479 - +39 049 9300344
Fax + 39 049 5794387
www.tecnoeka.com – info@tecnoeka.com

EC DECLARATION OF CONFORMITY

Appendix II A to Directive 2006/42/EC

Manufacturer name	TECNOEKA Srl
Manufacturer address	Via Marco Polo, 11 – 35010 Borgoricco (PD) Italy
Name of person responsible for technical file	Minotto Lorenzo
Address of person responsible for technical file	Via Marco Polo, 11 – 35010 Borgoricco (PD) Italy
Type of product	Electronic oven
Purpose of product	Cooking food
Model	EKF 664 TC – EKF 711 TC – EKF 1064 TC EKF 1111 TC – EKF 1664 TC – EKF 2011 TC

TECNOEKA Srl hereby declares that the above-mentioned products meet all the relevant requirements of the following directives:

Low voltage directive 2006/95/EC
Electromagnetic compatibility directive 2004/108/EC.

TECNOEKA Srl hereby declares that the above-mentioned products meet the requirements of the following harmonized standards:

IEC EN 60335-1; IEC EN 60335-2-42
IEC EN 55014-1; IEC EN 55014-2; IEC EN 61000-3-2; IEC EN 61000-3-3; IEC EN 61000-4-2
IEC EN 61000-4-4; IEC EN 61000-4-5; IEC EN 61000-4-6; IEC EN 61000-4-11; IEC EN 62233

TECNOEKA Srl hereby declares that the above-mentioned products also meet the requirements of the following directives:

Machinery directive 2006/42/EC;
General product safety directive 2001/95/EC;
Restriction of hazardous substances in electrical and electronic equipment (RoHS) directive 2002/95/EC;
Waste electrical and electronic equipment directive 2002/96/EC.

TECNOEKA Srl hereby declares that the above-mentioned products meet the requirements of EC Regulation 1907/2006

Borgoricco, 05/03/2013.

Signature of a Representative of the Board of Directors
(Lora Cristina)

Contents

1 Technical service

2 General information
- 2.1 Rating plate
- 2.2 Technical specifications

3 Instructions for the installer
- 3.1 Storage
- 3.2 Transporting the appliance
- 3.3 Unpacking the appliance
- 3.4 Removing the protective film
- 3.5 Disposing of packaging
- 3.6 Positioning
- 3.7 Electrical connection
- 3.8 Connecting the power cable
- 3.9 Connection to water mains (steam generation circuit)
- 3.10 Water drainage
- 3.11 Thermal overload safety devices
- 3.12 Electronic circuit protection
- 3.13 Disposing of the appliance

4 Instructions for the user
- 4.1 General information
- 4.1.1 Residual risks
- 4.2 Control panel
- 4.3 Touch control mode
- 4.3.1 Switching on/off
- 4.3.2 Manual mode
- 4.3.2.1 General information
- 4.3.2.2 Selecting cooking parameters
- 4.3.2.3 Setting cooking time or core temperature
- 4.3.3 Setting parameters
- 4.3.3.1 Cooking TIME setting (PARAMETER SCREEN)
- 4.3.3.2 TEMPERATURE setting (PARAMETER SCREEN)
- 4.3.3.3 HUMIDITY/STEAM setting (PARAMETER SCREEN)
- 4.3.3.4 "PREHEAT" setting (SUMMARY SCREEN)
- 4.3.3.5 FAN SPEED setting (SUMMARY SCREEN)
- 4.3.4 Selecting cooking steps (SUMMARY SCREEN)
- 4.3.5 Starting/Stopping the cooking cycle
- 4.3.6 Cooking cycle setting

4.3.6.1 Cooking cycle with time and cavity temperature
4.3.6.2 Cooking cycle with core temperature and cavity temperature
4.3.6.3 Cooking cycle with core temperature and Delta T
4.3.7 Program mode
4.3.7.1 Storing programs (recipes)
4.3.7.2 Deleting programs (recipes)
4.3.7.3 "Downloading" programs (recipes) from oven (to "USB drive")
4.3.7.4 "Downloading" all programs (recipes) on the oven (to "USB drive")
4.3.7.5 "Loading" programs (recipes) onto the oven (from "USB drive")
4.3.7.6 "Loading" all programs (recipes) on the "USB drive" onto the oven
4.3.7.7 Using programs stored by the user
4.3.7.8 "NEW RECIPE" option
4.3.7.9 "COPY RECIPE" option
4.3.8. Standard functions
4.3.8.1 "LAST" function
4.3.8.2 "CAVITY COOLING" function
4.3.8.3 "HACCP" function

5 Settings menu

6 Accessories menu

7 Oven-user communication

8 Cleaning
8.1 General information
8.2.1 Manual cleaning of the oven cavity
8.2.2 Automatic cleaning of the oven cavity (optional extra)
8.3 Cleaning the door seal
8.4 Cleaning the door
8.5 Cleaning the housing
8.6 Mothballing

9 Maintenance
9.1 General information
9.2 Replacing the door seal
9.3 Cleaning the fans
9.4 Adjusting the handle
9.5 Troubleshooting
9.6 Possible alarms
9.7 Wiring diagrams

10 Technical service

11 Information for users

12 Warranty

1. Technical service

For scheduled maintenance checks and repair work, contact your nearest Service Centre and use only original spare parts. Failure to comply with this instruction will void your warranty rights.

2. General information

This information has been written for your safety and that of others, so please read it carefully before installing and using the appliance.

This instruction manual must be kept with the appliance for future reference; if it is mislaid, order a replacement copy directly from the manufacturer.

1. If, when the goods are delivered, you find the **packaging** is not intact or is damaged, mark the delivery document with the following words: "**ACCEPTANCE CONDITIONAL ON INSPECTION OF GOODS**", specifying the type of damage, and get the driver to countersign it. Submit a written claim to the seller within 4 calendar days (not working days) from the date of delivery; any claims submitted after this deadline will not be accepted.
2. Read this handbook carefully: it supplies information on safe use, installation and maintenance. The purpose of this manual is to provide operators with information on the requirements and criteria that are essential to ensure their own safety and prolong the oven's operating life. This manual must be read by all personnel authorized to work on the appliance before it is put into operation.
3. Before cleaning or performing maintenance on the appliance, switch off electrical power and shut off the water supply.
4. The appliance is not meant to be used by children and/or people with physical, sensory or mental impairments or who lack experience or the proper knowledge, unless they are supervised by a person responsible for their safety or have instructions on the use of the appliance.

NB: Improper or incorrect use and failure to observe the installation instructions shall release the Manufacturer from all responsibility.

2.1 Rating plate (example)

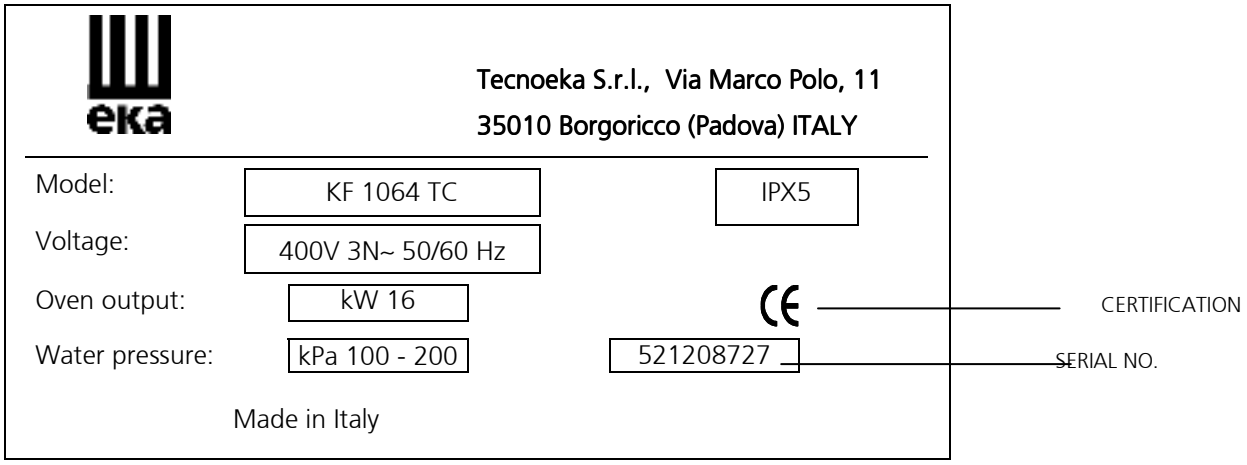

The "rating" plate is located on the side of the appliance.

2.2 Technical specifications

Model		EKF 664 TC EKF 711 TC	EKF 1064 TC EKF 1111 TC	EKF 1664 TC EKF 2011 TC
Overall dimensions:	height (feet included)	81 cm	113 cm	190 cm
	width	93 cm	93 cm	99 cm
	depth	86 cm	86 cm	95 cm
Weight:		109 kg	155 kg	230 kg
Maximum load per pan		4 kg		
Power rating:	Convection heating elements	2 – 10 kW	3 – 15 kW	5 – 30 kW
Maximum power rating:		10.5 kW	16 kW	30 kW
Electrical insulation class:		I		
Housing protection rating:		IPX5		
Water pressure:		100 – 200 kPa		
Supply voltage:		400V 3N~ 50/60 Hz 230V 50/60 Hz	400V 3N~ 50/60 Hz	
Power cord cross-sectional area:		5 x 2.5 mm^2		5 x 10 mm^2
Power cord type:		H07RN-F		
Power cord connection:		Type: Y		

The noise level of the appliance in operation is below 70 dB (A).

3. Instructions for the installer

The following instructions are aimed at qualified installers to ensure they carry out installation, wiring and plumbing work as correctly as possible and in accordance with safety regulations in force in the place where the appliance is installed.
The manufacturer shall not be liable for injury to people or pets or damage to property as a result of incorrect installation. The manufacturer is also not liable for any breakage or fault suffered by the appliance as a result of defective installation.

3.1 Storage

In the event the appliance has been stored in a warehouse where temperatures drop below 0°C (lowest permissible temperature is -5°C), warm it to a temperature of at least +10°C before putting it into operation.

3.2 Transporting the appliance

The appliance should be left in its packaging while being transported to prevent damaging the outside.
You must also allow for the weight of the appliance to prevent it tipping over.

3.3 Unpacking the appliance

Before installing, remove the packaging. Packaging consists in a wooden pallet that the appliance sits on and a cardboard box around it to provide protection. Make sure the appliance has not incurred damage during transit; if it has, advise your dealer and/or carrier straight away.

3.4 Removing the protective film

Before using the appliance, carefully remove the special film protecting stainless steel parts. Do not leave any glue residues on the surfaces. If necessary, remove them at once, using an appropriate non-flammable solvent.

3.5 Disposing of packaging

Dispose of packaging in strict compliance with the relevant regulations in force in the place where the appliance is installed. The various materials making up the packaging (wood-paper-cardboard-nylon-metal staples) must be sorted into like materials and disposed of through relevant collection and recycling centres. Whatever the case, dispose of waste in an environmentally responsible way.

3.6 Positioning

Check the installation site, making sure that there is sufficient room to carry the appliance to the site (check the size of door openings and corridors, if any). The dimensions of the appliance without the pallet are given in Fig. 1. The appliance must be installed in a well ventilated room with permanent vents.

The appliance must be positioned on a table or similar surface so that it is perfectly horizontal. **Never position it on the floor**.

For safety reasons, we recommend using the manufacturer's specially designed stand; otherwise, you will need to take into consideration the weight of the appliance. The maximum work height, referring to the height of the top shelf, must be 1.6 metres off the floor. Once the appliance is installed, stick on the relevant adhesive symbol (provided) at a height of 1.6 metres.

For easier access to the appliance and to encourage air to circulate around it, leave at least 50cm clearance between the left-hand side and the wall (or other appliance) and at least 10cm clearance between the back and the wall and between the right-hand side and the wall (see Fig. 1). It is strictly forbidden to block the forced air vents on the left-hand side panel and on the back, even partially or for short periods. **Failure to observe this specific prohibition shall relieve the manufacturer of the appliance of all liability and immediately void any warranty rights for said appliance,** given that the conformity of its design and construction has been voluntarily compromised.

For the same reason, do not place appliances with heat sources on the left side of the oven; if room temperature on that side becomes excessive, the oven actually turns off automatically as a safety measure.

If the appliance is installed near walls, shelves or suchlike, they must be of a non-flammable variety or insensitive to heat; otherwise, they will need to be protected with a suitable flame-retardant covering.

In this regard, you must comply with current regulations on the prevention of fire hazards.

The appliance is not suitable for recessed mounting.

3.7 Electrical connection

The appliance must be connected to the electrical mains according to current regulations. Before making the connection, make sure of the following:

- the voltage and frequency of the power supply system match the data on the "rating" plate affixed to the side of the appliance;
- the limiting valve and the system are able to take the appliance's load (see the "rating" plate);
- the power supply system has an adequate earth connection according to current regulations;
- an all-pole disconnect switch with a minimum gap between contacts for use in overvoltage category III equipment (4000V) must be fitted between the appliance and the mains in the fixed connection to the mains and must be sized to take the load and comply with current regulations (e.g. thermal-magnetic circuit breaker);
- the all-pole disconnect switch used for connection is easy to reach once the appliance is installed;
- **the yellow/green earth wire must not be disconnected by the switch;**
- The appliance must be connected to an earthing system, which must be duly checked to ensure it is in proper working order according to current code. This connection must be made using the appropriate terminal located on the back, marked with the symbol ⏚. The earth wire must have a cross-sectional area of at least 2.5mm².
- the power supply, when the appliance is operating, must not deviate from the rated voltage value by more than +/-10%;
- make sure that, once the power cord is inserted in the terminal block, it does not come into contact with any part of the appliance that gets hot.
- **if the power cord is damaged, it must be replaced by the manufacturer or an approved technical service centre or other similarly qualified person, so as to avoid any risks.**

Installation and connection drawings

MODELS KF 664 TC – KF 711 TC

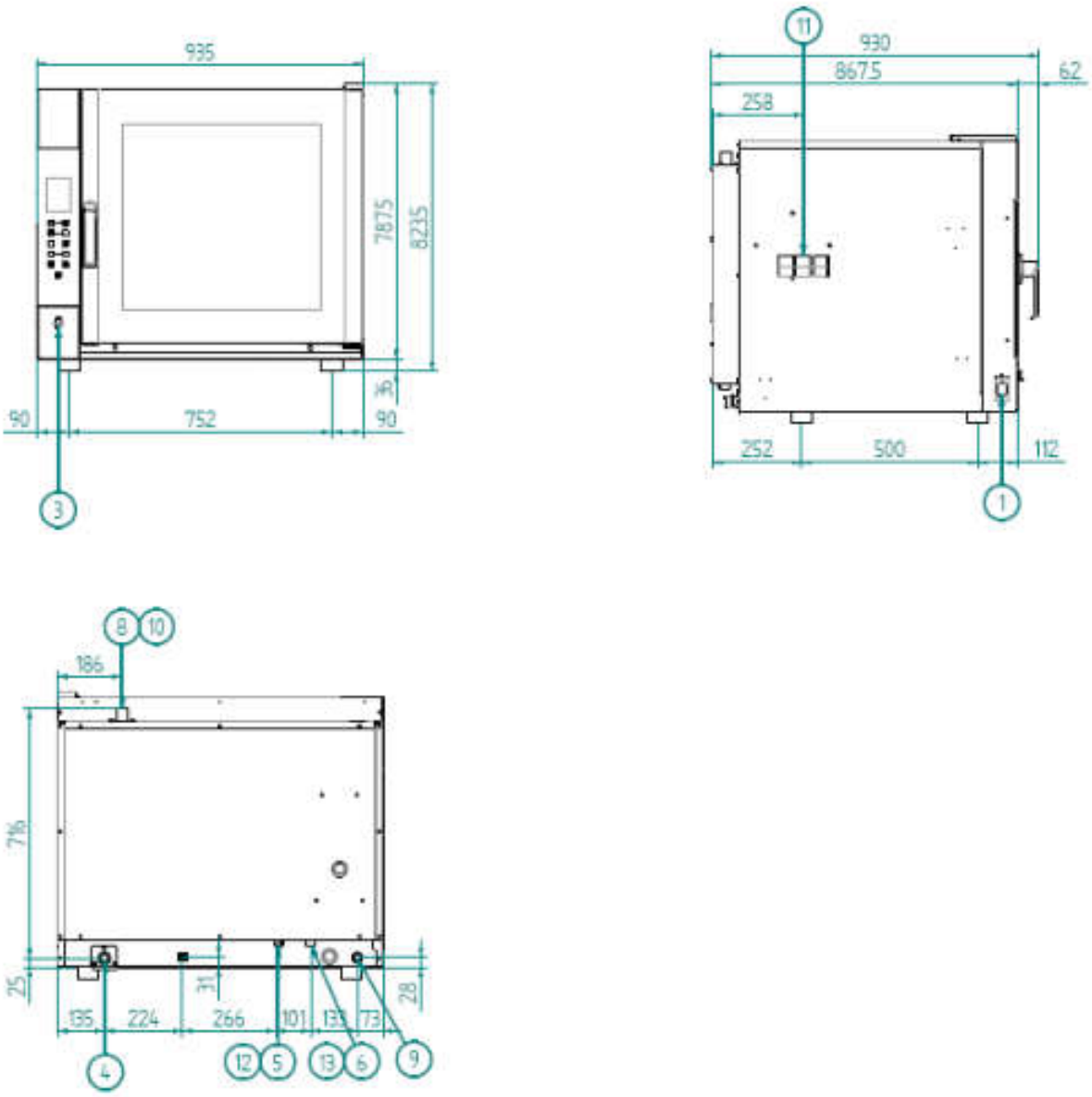

Fig. 1 (Dimensions are given in mm)

1	USB PORT
3	SOCKET TO CONNECT THE SENSOR TO THE CORE
4	WATER OUTLET (DN 30 PIPE)
5	WASHING WATER INLET
6	WATER INLET (THREADED ¾" SOLENOID)
8	STEAM OUTLET
9	CABLE CLAMP (POWER LEAD)
10	WARNING! HOT SURFACE
11	DO NOT BLOCK VENTS
12	ACCESS OF WATER MAX. 200kPa
13	ACCESS OF SOFTENED WATER MAX. 200kPa

Installation and connection drawings

MODELS KF 1064 TC – KF 1111 TC

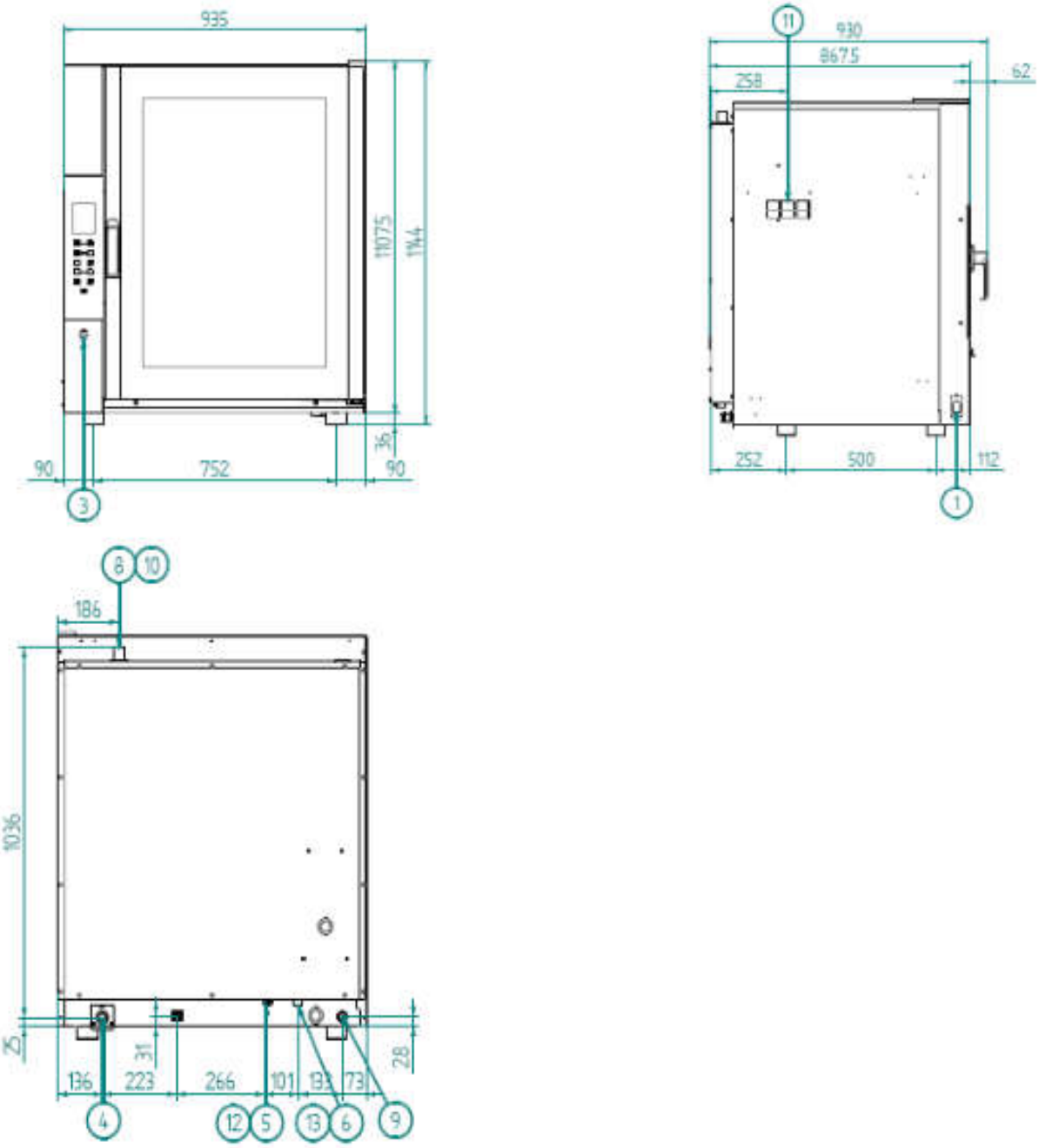

Fig. 1 (Dimensions are given in mm)

1	USB PORT
3	SOCKET TO CONNECT THE SENSOR TO THE CORE
4	WATER OUTLET (DN 30 PIPE)
5	WASHING WATER INLET
6	WATER INLET (THREADED ¾" SOLENOID)
8	STEAM OUTLET
9	CABLE CLAMP (POWER LEAD)
10	WARNING! HOT SURFACE
11	DO NOT BLOCK VENTS
12	ACCESS OF WATER MAX. 200kPa
13	ACCESS OF SOFTENED WATER MAX. 200kPa

Installation and connection drawings

MODELS KF 1664 TC – KF 2011 TC

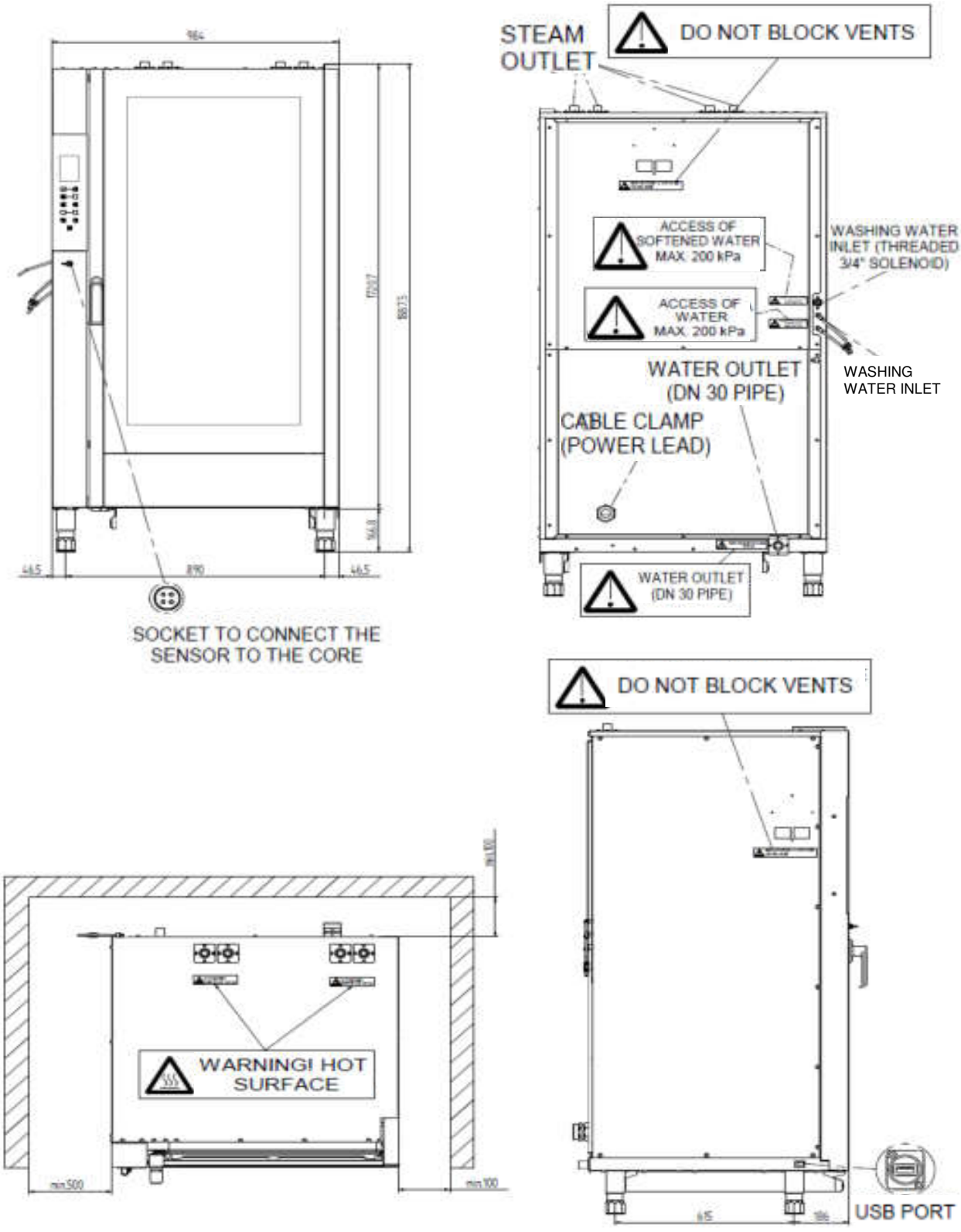

Fig. 1 (Dimensions are given in mm)

3.8 Connecting the power cord (MODELS EKF 664 TC – EKF 711 TC – EKF 1064 TC – EKF 1111 TC)

For access to the terminal block, simply remove the appliance's left side panel. Loosen the cable clamp located on the back of the appliance (at the bottom) (see Fig.1) and feed the cord through until it is close to the terminal block. Prepare the wires for connection to the terminal block so that once they are inserted, the earth wire will be the last to separate from its terminal if the cord is pulled by mistake.
Connect the 3 **line** wires **(L1, L2, L3)** to the terminals marked **"1" (brown wire), "2" (black wire) and "3" (grey wire)**, the **neutral** wire **(blue)** to the terminal marked **"4" or "5"** and the **earth** wire **(yellow/green)** to the terminal marked with the symbol ⏚ according to the following layout:

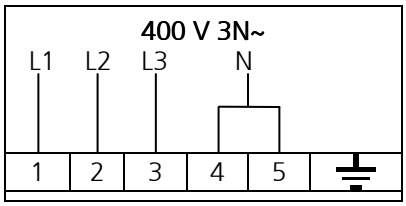

Tighten the cable clamp located on the back of the appliance (at the bottom) and refit the left side panel. The cord must meet the specifications given in the "Technical specifications" table (section 2.2). The appliance must be connected to an earthing system, which must be duly checked to ensure it is in proper working order according to current code.
This connection must be made between different appliances by using the appropriate terminal marked with the symbol ⏚. The earth wire must have a cross-sectional area of at least 2.5mm². The earth terminal is located on the rear of the appliance.

3.8 Connecting the power cord (MODELS EKF 1664 TC – EKF 2011 TC)

For access to the terminal block, simply remove the appliance's back panel. Loosen the cable clamp located on the back of the appliance (at the bottom) (see Fig.1) and feed the cord through until it is close to the terminal block. Prepare the wires for connection to the terminal block so that once they are inserted, the earth wire will be the last to separate from its terminal if the cord is pulled by mistake.
Connect the 3 **line** wires **(L1, L2, L3)** to the terminals marked **"1" (brown wire), "2" (black wire) and "3" (grey wire)**, the **neutral** wire **(blue)** to the terminal marked **"4", "5" and "6"** and the **earth** wire **(yellow/green)** to the terminal marked with the symbol ⏚ according to the following layout:

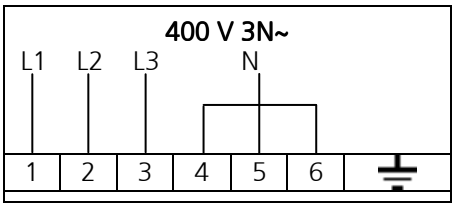

Tighten the cable clamp located on the back of the appliance (at the bottom) and refit the back panel. The cord must meet the specifications given in the "Technical specifications" table (section 2.2). The appliance must be connected to an earthing system, which must be duly checked to ensure it is in proper working order according to current code.
This connection must be made between different appliances by using the appropriate terminal marked with the symbol ⏚. The earth wire must have a cross-sectional area of at least 2.5mm². The earth terminal is located on the rear of the appliance.

3.9 Connection to water mains (steam generation circuit)

The appliance must be fed with **softened drinking water**, with a hardness value in the range from 0.5°fH to 3°fH and at a maximum temperature of 30°C.

Using a water softener is **compulsory** to reduce the formation of limescale in the cooking chamber (oven cavity).

Water pressure must be in the range from 100 to 200 kPa (1.0-2.0 bar). If the mains pressure is higher than 2.0 bar, install a pressure reducer upline from the appliance. If the value is less than 1.0 bar, use a pump to boost pressure.

The appliance comes with a hose (1.5 metres) with 3/4" threaded female fittings and relevant seals. Old seals must not be reused.

Connect the appliance to the water mains by means of the 3/4" threaded solenoid valve on the rear of the appliance (at the bottom) (see Fig.1), fitting a mechanical filter and an on/off valve between the appliance and mains (before you connect the filter, allow a certain quantity of water to flow out in order to flush any waste from the pipe).

NB DAMAGE AS A RESULT OF LIMESCALE OR OTHER CHEMICALS IN THE WATER IS NOT COVERED BY THE WARRANTY

3.10 Water drainage

A drain pipe (see Fig. 1) comes out from the rear of the appliance, to drain the oven cavity. This pipe must be connected up to a pipe made to resist steam temperatures (90°C-100°C) with an internal diameter of 30 mm (DN 30). To prevent choking, it is best to use a rigid pipe and make sure there are no "elbow" bends anywhere along the drain line.

Furthermore, the drain line must slope down (minimum slope 5%) along its full length (the length in question is from the appliance's drain pipe to the drain point and must not exceed 2 metres). The drain line must run into an open floor drain (Fig.2). In addition, there must be a free air gap of at least 25 mm (distance between the drain line coming from the appliance and the funnel on the drain standpipe). Whatever the case, in order to comply with current hygiene standards, the line connected to the appliance's drain pipe must not come into direct contact with the drain point. It is advisable to include a suitable trap in the line connecting the appliance's drain outlet to the grey water waste system, thus stopping the steam coming back out of the drain.

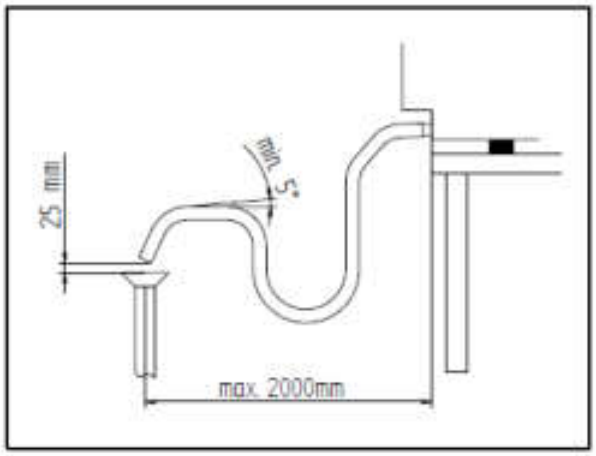

FIG. 2

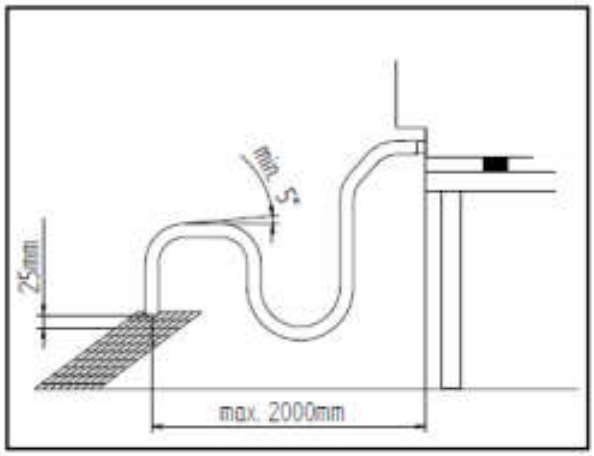

FIG. 3

3.11 Thermal overload safety devices

The appliance has a manually reset safety thermostat to protect against hazardous over-temperatures that could build up accidentally inside the appliance. If tripped, the device cuts off power to the appliance.

3.12 Electronic circuit protection

The electronic circuit housed in the electrical enclosure is fuse protected.

3.13 Disposing of the appliance

The appliance is made from recyclable raw materials and does not contain substances that are toxic or hazardous for people or the environment. Dispose of the appliance, as well as its packaging, in strict compliance with the relevant regulations in force in the place where it is installed. The appliance's various component materials must be sorted into like materials and disposed of through relevant collection and recycling centres. Whatever the case, dispose of waste in an environmentally responsible way.

4. Instructions for the user

4.1 General information

- Use the appliance with a room temperature in the range from +5°C to +25°C.
- The temperature of the appliance's outer surfaces can exceed 60°C so only touch the controls. Burn hazard!
- When using the appliance for the first time, we advise running it without a load for 40/50 minutes at a temperature of 220/230°C. This has the effect of eliminating unpleasant smells that may be given off by the thermal insulation and oil residues left over from the manufacturing process.
- Do not leave the oven unattended during operation.
- This appliance must be used only for the purpose for which it was specifically designed, i.e. for oven cooking food; any other use shall be deemed improper.
- The appliance can be used for baking pastries, baked goods and delicatessen products: both fresh and frozen; for reheating/thawing chilled and frozen foods; and for steaming meats, fish and vegetables.
- Do not use the oven to cook food containing readily flammable substances, such as alcohol-based food, as this could generate spontaneous combustion and hence result in fires and explosions in the oven cavity.
- When placing food in the cavity, leave at least 40 mm between one pan and the next so as not to overly impede air circulation.
- Do not use pans with higher than necessary sides: sides constitute barriers that prevent the circulation of hot air.
- Preheat the oven before each cooking session for maximum performance.
- For ultimate cooking uniformity, distribute the food evenly in each individual pan, taking into account the item's size, layers or thickness.
- Do not salt foods inside the oven cavity.
- To check the progress of the cooking cycle, use the oven cavity's internal lighting: do not open the door unnecessarily as this results in wasted energy and longer cooking times.

WARNING

To stop food boiling over, do not use containers filled with liquids, or with food that liquefies when heated, unless they have more than enough capacity to contain the liquid within.

4.1.1 Residual risks

After a cooking session, open the door carefully to avoid heat rushing out, which could result in scalding.

While the oven is in operation, be careful around the areas of its outer surfaces that get hot (marked on the appliance).

The counter or stand the appliance sits on must be able to take the weight of the unit and accommodate it correctly.

The appliance contains electrical parts and must never be washed with a jet of water or steam.

The appliance is electrically connected: before performing any kind of cleaning on the appliance, cut the power.

To prevent the appliance being hooked up incorrectly, the relevant electrical and water connections are marked by suitable identification plates.

Trolley-mounted model (For MODELS EKF 1664 TC – EKF 2011 TC only)

There is a microswitch located at the base of the oven to check that the lower portion of the oven is closed.

The oven can be turned on only if the trolley is detected inside the oven or, if there is no trolley, if the door closing panel is fastened.

WARNING

When removing the pan trolley from the oven, bear in mind that it can get hot and you will therefore need to wear suitable protective heat-resistant gear to handle it safely.

You must make sure the pan trolley can be moved easily and that there are no obstacles of any kind likely to interfere with the job of moving it in and out of the oven: knocks can cause hot liquids or food to spill out, SCALDING HAZARD!

4.2 Control panel

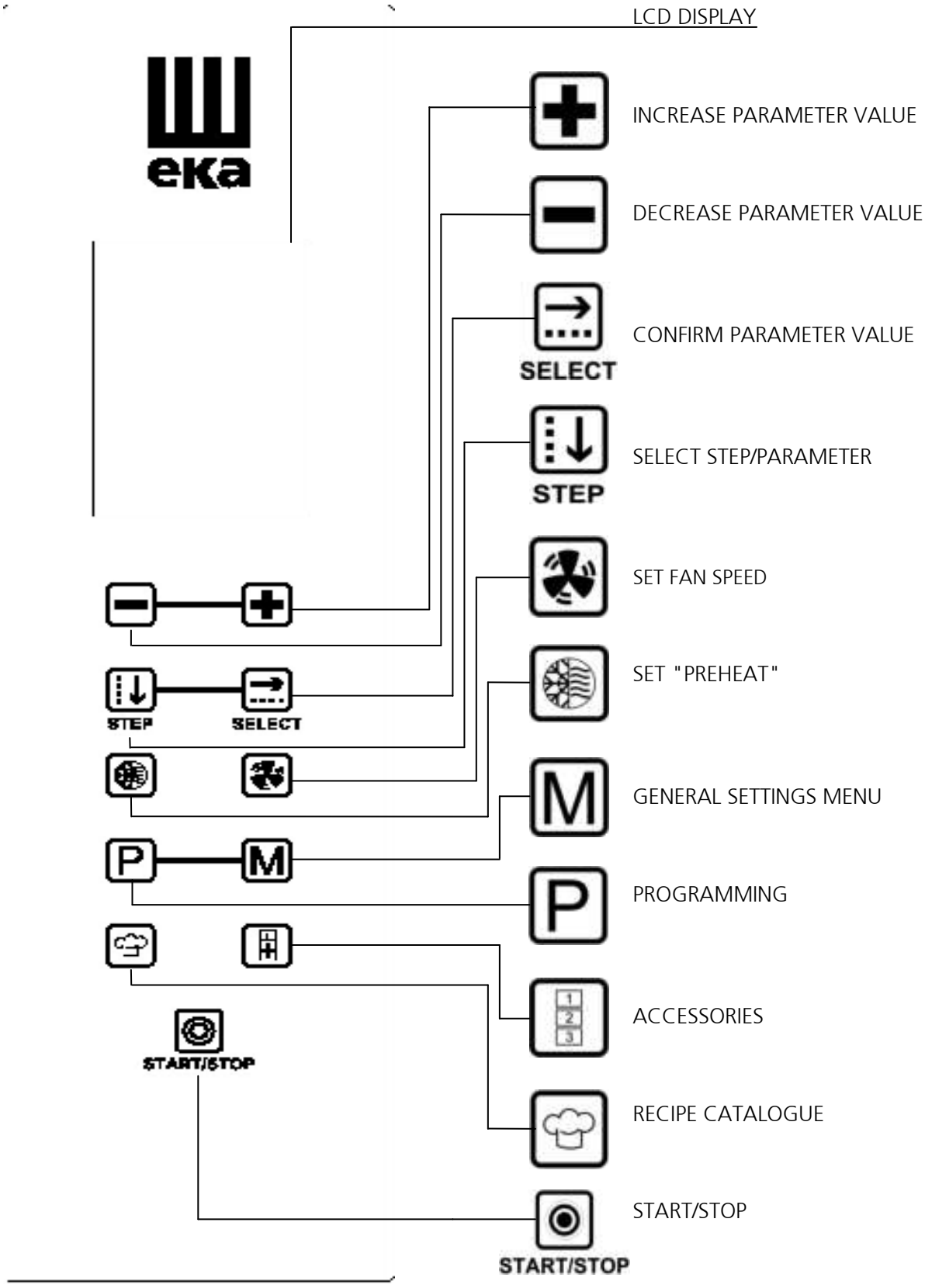

4.3 Touch control mode

The **TOUCH** control is operated by touching the screen-printed keypad with your finger (use fingers only; do not use utensils, such as knives or forks, or objects of any kind).
All the oven's functions are activated by touch control. To make using the control panel even easier, only the keys that can actually be activated are lit.

4.3.1 Switching on/off

Hold your finger on the **"START/STOP"**  key for a few seconds and the **"EKA"** logo will come up on screen with the **DATE/TIME**.

After 5", the screen fades out and the oven automatically switches to cooking cycle programming mode: the **"TIME"**  parameter screen appears.

If no key is activated for 10 minutes, the Touch control switches to STANDBY and only the **"START/STOP"**  key stays lit on the control panel.

To reactivate Touch control, simply hold your finger on the **"START/STOP"**  key for a few seconds. To activate STANDBY mode, hold your finger on the **"START/STOP"**  key for a few seconds.

4.3.2 Manual mode

4.3.2.1 General information

You can program the cooking cycle via the PARAMETER SCREEN (displays the value of each individual parameter of the cooking cycle) or using the SUMMARY SCREEN (displays all cooking cycle parameter values at the same time).

The PARAMETER SCREEN comes up automatically only the first time the cooking cycle is set, after the oven is switched on for the first time. In this case, you must confirm the set parameter values using the **"SELECT"**  key.

On the SUMMARY SCREEN, you also have the option of selecting the parameter to be displayed individually. Choose the parameter to be displayed by using the **"STEP"** key, then touch the **"SELECT"** key and the PARAMETER SCREEN will appear.

On both the SUMMARY SCREEN and PARAMETER SCREEN, the value set is confirmed automatically after 5".

If the SCREEN TURNS RED, it means **WARNING** when the value of a parameter required for the step to be activated has not been set while programming a step of the cooking cycle (⚠ symbol by the number of the step with the missing operating parameter).

If the SCREEN TURNS RED, it means **ALARM** when trouble is encountered while the oven is operating preventing the cooking cycle from continuing (the type of trouble is described and represented by a symbol).

See the relevant section for the various types of alarm.

4.3.2.2 Selecting cooking parameters

For each step (up to 9 steps) of the cooking cycle, the following parameters can be set:

1. Cooking time
2. Cavity temperature
3. Core temperature
4. Delta T
5. Humidity/steam function percentage (%)

To confirm the parameter set and advance to the next setting, touch the **"SELECT"** key.

Airflow speed inside the cooking cavity can be edited (3 available speeds) using the key.

NB *A complete cooking cycle does not necessarily have to include all 9 available steps; consequently, you have the choice of setting only the steps you want without any detrimental effect on the oven's operation.*

4.3.2.3 Setting cooking time or core temperature

Each cooking step is controlled by the cooking time parameter or by the core temperature parameter.

Time and core temperature parameters are mutually exclusive: if the core temperature parameter value is set, the time parameter value is cancelled automatically, even if it was set before.

Warning: *setting cooking times that are too short or core temperatures that are too low compared to the correct values can result in incomplete cooking.*

Setting cooking times that are too long or core temperatures that are too high compared to the correct values can result in excessively dry cooking, with the risk of the surface of the food being burnt.

4.3.3 Setting parameters

4.3.3.1 Cooking TIME setting (PARAMETER SCREEN)

Using the **"STEP"**  key, you can set:

1. TIME
2. PAUSE
3. HOLD

1. TIME

   The parameter can be set in the range from 0h 01' to 9h 59'. When using the cooking cycle in MANUAL mode, you can also set an "INF" (INFINITE) time in STEP 1: the oven will continue to operate until you switch it off.

2. PAUSE

   This option can be set for a time in the range from 0h 01' to 23h 59'.

   Inserting the PAUSE in STEP 1 allows you to introduce a "DELAYED START" to the cooking cycle, which is useful when dealing with products that have to be allowed to prove before being baked.

   Inserting the PAUSE after STEP 1 allows you to limit the "thermal pressure" on the product.

3. HOLD

   This option can be used to hold the oven cavity at a constant temperature of 75°C until you switch the oven off.

   The message **"OFF"** will appear on the PARAMETER SCREEN:

   you can touch the  key to enable this option (the message on the display changes to **"ON"**) and confirm your choice with the **"SELECT"**  key;

   you can touch the  key to disable this option (the message on the display changes back to **"OFF"**) and confirm your choice with the **"SELECT"**  key.

   At the end of the cooking cycle, with this option active, the display will read: **"OVEN IN HOLD MODE"**.

While the cooking cycle is active, the display will read: **"COOKING IN PROGRESS"**.

While the cooking cycle is "PAUSED", the display will read: **"COOKING STARTS IN"** (countdown)

With "COOKING IN PROGRESS": the countdown of the set time appears on the display by the  symbol, while the total time set for the cooking cycle (comprising 1 or more STEPS) appears on the right.

NB *On the PARAMETER SCREEN, the parameter value set can be confirmed straight away by using the* ***"SELECT"***  *key; otherwise, the value will be confirmed automatically after 5".*

4.3.3.2 TEMPERATURE setting (PARAMETER SCREEN)

Using the "STEP" key, you can set:

1. CAVITY TEMPERATURE
2. CORE TEMPERATURE (The core probe is not included but is an optional accessory)
3. DELTA T value (The core probe is not included but is an optional accessory)

1. CAVITY TEMPERATURE

Use keys and to increase or decrease the temperature value (from 30°C to 260°C). Next, confirm your choice with the **"SELECT"** key.

With "COOKING IN PROGRESS": the value of the set temperature appears on the display by the symbol, while the value of the actual temperature detected in the cooking cavity appears by the symbol.

2. CORE TEMPERATURE

Use keys and to increase or decrease the temperature value (from 0°C to 100°C). Next, confirm your choice with the **"SELECT"** key.

With "COOKING IN PROGRESS": the value of the set temperature appears on the display by the symbol, while the value of the actual temperature detected by the core temperature probe appears by the symbol.

When the CAVITY TEMPERATURE parameter and the CORE TEMPERATURE parameter are given on the SUMMARY SCREEN, proceed as follows to go back to set the TIME parameter :

- Use the **"STEP"** key to select the CORE TEMPERATURE parameter .
- Touch the **"SELECT"** key (the PARAMETER SCREEN comes up on the display);

– Use the **"STEP"** key to select the CAVITY TEMPERATURE parameter ;

– Touch the **"SELECT"** key.

Once you have followed these steps, the SUMMARY SCREEN will appear on the display in red (if the PREHEAT function has not been set) to indicate that the TIME parameter ("00.00") is missing.

3. DELTA T VALUE

Use keys and to increase or decrease the temperature value (from 0°C to 100°C).

Next, confirm your choice with the **"SELECT"** key.

With "COOKING IN PROGRESS": the value of the set temperature appears on the display by the symbol, while the value of the actual temperature detected by the core temperature probe appears by the symbol.

The set temperature value appears by the symbol, while the value of the actual temperature detected in the cooking cavity appears by the symbol.

When the CORE TEMPERATURE parameter and the DELTA T parameter are given on the SUMMARY SCREEN, proceed as follows to go back to set the TIME parameter :

– Use the "STEP" key to select the DELTA T parameter ;

– Touch the "SELECT" key (the PARAMETER SCREEN comes up on the display);

– Use the "STEP" key to select the CAVITY TEMPERATURE parameter ;

– Touch the **"SELECT"** key.

Once you have followed these steps, the SUMMARY SCREEN will appear on the display in red (if the PREHEAT function has not been set) to indicate that the TIME parameter ("00.00") is missing.

4.3.3.3 HUMIDITY/STEAM setting (PARAMETER SCREEN)

Use keys ⊞ and ⊟ to increase or decrease the humidity/steam value (from 10% to 100%). Next, confirm your choice with the **"SELECT"** SELECT key.

4.3.3.4 "PREHEAT" setting (SUMMARY SCREEN)

Touch the key and the relevant PARAMETER SCREEN comes up on the display.

Touch the ⊟ key (**"NO"** message) to switch off the function or the ⊞ key (**"YES"** message) to activate it. In both cases, touch the **"SELECT"** SELECT key to confirm your choice; otherwise, the choice will be confirmed automatically after 5".

During the preheating stage, the **"PREHEAT IN PROGRESS"** message appears on the display and no value **(---)** appears by the TIME parameter .

This means that the preheating time is not included in the cooking time.

Once the preheating temperature has been reached (temperature set in cooking cavity increased by 40°C: this temperature is held unless the door is opened), an alarm beeps and the **"PREHEAT OK OPEN DOOR"** message flashes on the display. Open the door, place the product to be cooked inside the oven and close the door again: the cooking cycle starts automatically.

WARNINGS

*The "PREHEAT" function is preset for each cooking cycle (**"YES"** message appears on display by the symbol).*

During pre-heating phase, internal cooking chamber temperature must not to be higher than 260°C for no longer than 10 minutes.

4.3.3.5 FAN SPEED setting (SUMMARY SCREEN)

With a choice of 3 fan speeds for airflow in the cooking cavity, you can cook any kind of product, from the lightest, most delicate food items to those requiring more heat to be circulated.

Touch the key and the relevant PARAMETER SCREEN comes up on the display;

Use the and keys to set the desired speed level:

low speed (■)
medium speed (■■)
high speed (■■■)

Touch the **"SELECT"** SELECT key to confirm your choice; otherwise, the choice will be confirmed automatically after 5".

NB *The default setting for each cooking cycle is high speed (■■■)*

You can still use the key during the cooking cycle to change the fan speed level. If this action is performed during a cooking cycle that has already been programmed, at the end of the cooking cycle the fan speed values will go back to the ones originally set when the program in question was created.

"SEMI-STATIC" MODE

The "semi-static" cooking is a cooking method that allows to activate the motors only when the heating elements are in function.
The fans are activated for some seconds, to distribute the heat generated by the heating elements keeping an even temperature inside the cooking chamber.
In this way the we reproduce the function of the static oven.

To activate the "semi-static" cooking mode proceed as follow (from **SUMMARY SCREEN**):

Push the button and on the display appears **"SET AIR FLOW SPEED".**

Press the button to activate the "semi-static" cooking mode: the letters "**ST OFF**" change to "**ON ST**" indicating the successful activation.

Press **"SELECT"** SELECT button to confirm your choice: the summary screen shows **"ST"** in the direction of the icon that indicates the speed of the motors.

Even during the "semi-static" cooking you can change the fan speed.

Proceed as follows (from **SUMMARY SCREEN**):

Push the button and on the display appears **"SET AIR FLOW SPEED ".**

Press keys and to set the desired speed.

Press "**SELECT**" SELECT button to confirm your choice.

4.3.4 Selecting cooking steps (SUMMARY SCREEN)

Each cooking cycle can comprise up to 9 STEPS (stages). You can select the desired parameters for each step.

To switch from one step to the next, once you have set STEP 1, proceed as follows:

touch the **"STEP"**  key to select STEP 1 (word highlighted against dark square);

touch the  key. The SUMMARY SCREEN appears on the display in red with the message STEP 2 (the red background is there to advise you that the value of the TIME parameter has not been set and hence the step selected cannot be put into effect).

Use the **"STEP"**  key to select the TIME parameter  and then use the  and  keys to set the desired value.

As soon as the TIME parameter has been set, the SUMMARY SCREEN background turns blue to indicate that STEP 2 has become operative.

Complete the setting procedure for all the other desired parameters.

To advance to the next steps (STEP 3, STEP 4…), repeat the procedure described for setting STEP 2.

Once you have finished setting the steps, use the **"START/STOP"**  key to start the cooking cycle.

The SUMMARY SCREEN for STEP 1 of the cooking cycle comes up on the display along with the total number of steps making up the cycle in question. (E.g. 1/5 means this is STEP 1 of a total of 5 set steps).

By the TIME parameter: the countdown of the currently active step is shown on the left, while the total time of all the cooking cycle's steps is shown on the right.

If cooking is being done in "manual" mode, the **"MANUAL"** message appears on the display; if a "programmed" cooking cycle has been chosen, a message with the name of the recipe (program) stored appears.

4.3.5 Starting/stopping the cooking cycle

Once you have set the desired cooking parameters, use the **"START/STOP"** START/STOP key to start the relevant cycle.

To stop the cooking cycle at any time, hold the **"START/STOP"** START/STOP key again for a few seconds.

When a cooking cycle stops (in "manual" mode or in "programmed" mode), an alarm beeps for 30" and, at the same time, the following message will flash on screen: **"END OF COOKING".**

If the ✚ key is touched during this time, the SUMMARY SCREEN for the cooking cycle that has just ended will come back up on the display. The cooking cycle starts again automatically for 1 MINUTE. To extend the cooking time, simply touch the **"STEP"** STEP key and select the TIME parameter ◷; then use the ✚ key to set the desired value.

The 30" "end of cooking" beeping alarm can be switched off at any time by touching the **"STEP"** STEP key or the **"START/STOP"** START/STOP key.

The SUMMARY SCREEN for the cooking cycle that has just ended will come back up on the display.

4.3.6 Cooking cycle setting

4.3.6.1 Cooking cycle with time and cavity temperature

From the "TIME" ◷ PARAMETER SCREEN

Use the ✚ and ━ keys to set the desired value:

TIME ("INF" or in the range from 0h 01' to 9h 59')

Use the **"STEP"** STEP key to set the desired option:

PAUSE (in the range from 0h 01' to 23h 59')

HOLD ("YES" or "NO")

Touch the **"SELECT"** key to confirm the settings.

From the SUMMARY SCREEN

Use the **"STEP"** key to select the TIME parameter and use the and keys to set the desired value. The value is confirmed automatically after 5".

From the "CAVITY TEMPERATURE" PARAMETER SCREEN

Once you have set the TIME parameter value, touch the **"SELECT"** key: the screen appears relating to the 3 different TEMPERATURE parameters (Cavity temperature/Core temperature/Delta T). To make the operator's job easier, the oven comes set with a CAVITY TEMPERATURE of 180°C. To edit the default value, use the and keys. Press the **"SELECT"** key to confirm the setting.

From the SUMMARY SCREEN

Use the **"STEP"** key to select the TEMPERATURE parameter and use the and keys to set the desired value.

The value is confirmed automatically after 5".

From the "HUMIDITY/STEAM %" PARAMETER SCREEN (optional function)

Once you have set the "CAVITY TEMPERATURE" parameter value, touch the **"SELECT"** key: the "HUMIDITY/STEAM %" parameter screen appears.

Use the and keys to set the desired value. Press the **"SELECT"** key to confirm the setting.

From the SUMMARY SCREEN

Use the "STEP" key to select the HUMIDITY/STEAM % parameter and use the and keys to set the desired value. The value is confirmed automatically after 5". Use the "START/STOP" key to start the cooking cycle.

4.3.6.2 Cooking cycle with core temperature and cavity temperature

From the "TIME" PARAMETER SCREEN

If you need to set the CORE TEMPERATURE, there is no need to set the TIME parameter.

Nonetheless, you can still choose the "PAUSE" and "HOLD" options using the "STEP" key.

Press the "SELECT" key to confirm the settings.

From the CAVITY TEMPERATURE PARAMETER SCREEN

Use the and keys to set the desired value.

Use the "STEP" key to select the "CORE TEMPERATURE" parameter and use the and keys to set the desired value. Use the "SELECT" key to confirm the settings.

From the SUMMARY SCREEN

Use the "STEP" key to select the "CAVITY TEMPERATURE" parameter and use the and keys to set the desired value. Touch the "SELECT" key to confirm the setting (the screen with the 3 different temperature parameters appears). Use the "STEP" key to select the "CORE TEMPERATURE" parameter and use the and keys to set the desired value. The value is confirmed automatically after 5".

IMPORTANT

The needle temperature probe (core probe) must be inserted in the centre of the food item, at its thickest point, avoiding contact with bones, if any. Once you have placed the food item in the oven cavity, pull out the temperature probe cable, running it out of the bottom of the cavity, and close the oven door.

The probe must be plugged into the relevant socket located on the control panel (see fig.1).

WARNINGS

Before removing the food item from the oven after cooking with the needle temperature probe (core probe) inserted, carefully remove the probe, which is still hot, from the cooked food item, being careful not to leave it swinging out of the oven cavity: it can cause burns!

If you need to use it again straight away, it is best to let it cool first (this will also avoid the food being damaged by holes made with the probe).

Do not use the needle temperature probe (core probe) in high-temperature cooking (OVER 230°C) to avoid damaging the probe irreparably;

also be careful not to let the probe's cable touch the hot metal surfaces inside the oven cavity.

From the "HUMIDITY/STEAM %"  **PARAMETER SCREEN** (optional function)

Once you have set the "CORE TEMPERATURE" parameter value, touch the **"SELECT"**  key: the "HUMIDITY/STEAM %" parameter screen appears.

Use the  and  keys to set the desired value. Touch the **"SELECT"**  key to confirm the setting.

From the SUMMARY SCREEN

Use the "STEP" key to select the HUMIDITY/STEAM % parameter and use the and keys to set the desired value. The value is confirmed automatically after 5". Use the "START/STOP" key to start the cooking cycle.

4.3.6.3 Cooking cycle with core temperature and Delta T

From the "TIME" PARAMETER SCREEN

If you need to set the CORE TEMPERATURE and DELTA T value, there is no need to set the TIME parameter.

Nonetheless, you can still choose the "PAUSE" and "HOLD" options using the "STEP" key.

Use the "SELECT" key to confirm the settings.

From the "CAVITY TEMPERATURE" PARAMETER SCREEN

If you need to set the CORE TEMPERATURE and DELTA T value, there is no need to set the CAVITY TEMPERATURE parameter.

Use the "STEP" key to select the "CORE TEMPERATURE" parameter and use the and keys to set the desired value. Use the "STEP" key again to confirm the setting and select the "DELTA T" parameter.

Use the and keys to set the desired value. Touch the "SELECT" key to confirm the setting.

From the SUMMARY SCREEN

Use the **"STEP"** key to select the "CAVITY TEMPERATURE" parameter.

Touch the **"SELECT"** key: this calls up the screen with the 3 different temperature parameters.

Use the **"STEP"** key to select the "CORE TEMPERATURE" parameter and use the and keys to set the desired value.

Use the **"STEP"** key again to confirm the setting and select the "DELTA T" parameter ΔT.

Use the and keys to set the desired value.

The value is confirmed automatically after 5".

IMPORTANT

The "DELTA T" parameter allows you to keep the difference in temperature (ΔT) between the inside of the food (temperature measured by the needle temperature probe) and inside of the cooking cavity constant throughout the cooking step. This means that the value of the temperature inside the cooking cavity becomes the sum of the value of the temperature inside the food and a fixed temperature value "ΔT" set by the operator.

In practical terms, you get a slow increase in the cooking cavity temperature, with a constant difference from the temperature inside the food, which – as a result – undergoes a long and gentle cooking process (when cooking meat, this means that the proteins are retained as it avoids the surface tension that is otherwise associated with the crust forming too quickly).

From the "HUMIDITY/STEAM %" PARAMETER SCREEN (optional function)

Once you have set the "DELTA T" parameter value ΔT, touch the **"SELECT"** key: the "HUMIDITY/STEAM %" parameter screen appears. Use the and keys to set the desired value. Touch the **"SELECT"** key to confirm the setting.

From the SUMMARY SCREEN

Use the **"STEP"** key to select the HUMIDITY/STEAM % parameter and use the and keys to set the desired value. The value is confirmed automatically after 5". Use the **"START/STOP"** key to start the cooking cycle.

4.3.7 Program mode

4.3.7.1 Storing programs (recipes)

You can store up to 200 programs/recipes, giving each a **NAME**, which can contain up to 10 letters of the alphabet.

Once you have set the cooking parameters for the program (recipe) you want to store, proceed as follows:

touch the key to call up the "PROGRAMMING MENU" screen.

Touch the **"STEP"** key and select the symbol. Confirm your selection with the **"SELECT"** key: a screen comes up with the letters of the alphabet.

You can use the and keys to move horizontally (to the left/ to the right) and the **"STEP"** key to move vertically (each "touch" moves one space down, while holding your finger on the **"STEP"** key moves you up).

Once you are on the letter you want (highlighted against a dark square), touch the **"SELECT"** key, which will cause the chosen letter to appear at the top of the screen.

If you get a letter of the alphabet wrong while writing the name, move over (symbol against dark square); touching the **"SELECT"** key will then delete the letter.

Once you have written the name of the program (recipe), touch the **"STEP"** key to move over "SAVE" (word highlighted against dark square).

Touching the **"SELECT"**  key will call up the **"RECIPE CATALOGUE"** screen showing 8 different product types:

- STARTERS
- MAINS
- FISH
- GAME
- BREAD
- VEGETABLES
- CAKES/DESSERTS
- ADDITIONAL

Touch the **"STEP"**  key to select the product type (icon with square) to save the recipe to.

Touch the **"SELECT"**  key to confirm.

The summary screen for the cooking cycle with the name just entered will come up on the display automatically.

NB *You can cancel programming at any time: touch the* ***"STEP"***  *key to move over* ***"CANCEL"*** *(word highlighted against dark square) and then touch the* ***"SELECT"***  *key to confirm your choice. The SUMMARY SCREEN for the last cooking cycle set will come back up on the display.*

4.3.7.2 Deleting programs (recipes)

At any time, you can delete a program (recipe) that has been set and stored in the **"CHEF RECIPE CATALOGUE"**.

Touch the key with the  symbol to call up the **"EKA RECIPE CATALOGUE"** screen.

Use the **"STEP"** key to select the word **"CHEF"** (word highlighted against dark square).

Touching the **"SELECT"** key will call up the **"RECIPE CATALOGUE"** screen (8 product type icons). Touch the **"STEP"** key to select the icon of the product (e.g. cake/dessert or starter or vegetables) the recipe (program) to be deleted is stored in.

Touch the **"SELECT"** key to select the RECIPE CATALOGUE with the NAME of the recipe to be deleted. Touch the **"STEP"** key to select the recipe to be deleted. Touch the **"SELECT"** key to confirm your choice. Touch the P key to call up the **"PROGRAMMING MENU"** screen. Touch the **"STEP"** key to select the ☒ symbol (**"DELETE"** symbol) and confirm your choice with the **"SELECT"** key.

The screen reads: **"GO AHEAD WITH DELETION?".**

Touch the **"SELECT"** key to confirm your choice.

The recipe is deleted. (The **"TIME"** parameter screen will come up on the display enabling you to start entering a new recipe).

4.3.7.3 "Downloading" programs (recipes) from oven (to "USB drive")

You can use the oven's "USB port" to download programs (recipes) stored in the "CHEF RECIPE CATALOGUE" to the "USB drive".

Insert the "USB drive" in the oven's port. Touch the key with the symbol to call up the **"EKA/CHEF RECIPE CATALOGUE"** screen. Use the **"STEP"** key to select the word **"CHEF"** (word highlighted against dark square). Touching the **"SELECT"** key will call up the **"RECIPE CATALOGUE"** screen (8 product type icons). Use the **"STEP"** key to select the icon

of the product (e.g. cake/dessert or starter or vegetables) the recipe (program) to be "downloaded" is stored in. Touch the **"SELECT"** key to select the RECIPE CATALOGUE with the name of the recipe to be "downloaded". Use the **"STEP"** key to select the recipe (name) to be "downloaded". Touch the **"SELECT"** key to confirm your choice (this calls up the summary screen for the cooking cycle relating to the selected recipe).

Touch the P key to call up the **"PROGRAMMING MENU"** screen.

Touch the **"STEP"** key to select the symbol.

Touch the **"SELECT"** key to confirm your choice: the recipe is "loaded" onto the "USB drive". The **"RECIPE CATALOGUE"** screen (8 product type icons) comes up again: to "load" other recipes (onto the "USB drive"), repeat the procedure followed for the first recipe.

4.3.7.4 "Downloading" all programs (recipes) on the oven (to "USB drive")

You can use the oven's "USB port" to download all recipes contained in the **"CHEF RECIPE CATALOGUE"** all in one go.

Touch the M key to call up the general settings menu screen.

Keep tapping the **"STEP"** key until you select the icon.

Touch the **"SELECT"** key to call up the screen with the letters of the alphabet.
Enter the "**CHEF** password" (see section **4.3.7.1** for instructions on how to select the letters).

Use the **"STEP"** key to move over "SAVE" (word highlighted against dark square).

Touch the **"SELECT"** key: a screen appears indicating the recipe transfer is in progress.
Once done, all recipes on the oven will also be found on the "USB drive".

Warning
During transfer, recipes with the SAME NAME as the new recipes being transferred from the oven will be "overwritten" on the "USB drive".

NB
Each operation must be performed within 5", after which the cooking cycle summary screen will appear automatically.

4.3.7.5 "Loading" programs (recipes) onto the oven (from "USB drive")

You can use the oven's "USB port" to "load" programs (recipes) stored on the "USB drive" into the "**CHEF RECIPE CATALOGUE**". Insert the "USB drive" in the oven's port. Touch the P key to call up the **"PROGRAMMING MENU"** screen.

Touch the **"STEP"** STEP key to select the symbol. Touch the **"SELECT"** SELECT key to confirm your choice: the RECIPE CATALOGUE screen comes up with the name of the recipes contained on the "USB drive".

Use the **"STEP"** STEP key to select the recipe (name) to be "loaded" into the "CHEF RECIPE CATALOGUE". Touch the **"SELECT"** SELECT key to confirm your choice: the recipe (name) is stored in the RECIPE CATALOGUE for the relevant product type (e.g. Lasagne = STARTERS, Trout = FISH, Potatoes = VEGETABLES etc.). The RECIPE CATALOGUE screen comes up again with the name of the recipes contained on the "USB drive": to "load" other recipes (into the "CHEF RECIPE CATALOGUE"), repeat the procedure followed for the first recipe.

NB
Each operation must be performed within 5", after which the cooking cycle summary screen will appear automatically.

4.3.7.6 "Loading" all programs (recipes) on the "USB drive" onto the oven

You can use the oven's "USB port" to "load" all programs (recipes) stored on the "USB drive" into the "**CHEF RECIPE CATALOGUE**" in one go.

Insert the "USB drive" in the relevant port.

Touch the P key to enter the programming menu. Keep tapping the **"STEP"** STEP key until you select the icon. Touch the **"SELECT"** SELECT key to confirm your choice.

Touch the **"STEP"** key just once to select all the recipes.

Touch the **"SELECT"** key to commence the recipe transfer.
During the recipe transfer, the display will read "OPERATION IN PROGRESS" and will show the number of recipes still remaining before transfer is complete.

Warning
During transfer, recipes with the SAME NAME as the new recipes being transferred from the "USB drive" will be "overwritten" in the ***"CHEF RECIPE CATALOGUE"***

4.3.7.7 Using programs stored by the user

To use a program (recipe) stored by the user:

Touch the key with the symbol to call up the **"EKA RECIPE CATALOGUE"** screen. Use the **"STEP"** key to select the word **"CHEF"** (the "CHEF RECIPE CATALOGUE" screen comes up).

Touch the **"SELECT"** key: the "RECIPE CATALOGUE" screen (product type icons) comes up.

Touch the **"STEP"** key to select the type of product to which the name of the recipe to be used belongs. Touch the **"SELECT"** key to confirm the product type. The **"RECIPE CATALOGUE RECIPE SELECTION"** screen appears.

Use the **"STEP"** key to select the name of the recipe to be used. Touch the **"SELECT"** key to confirm your choice. The summary screen for the cooking cycle with the recipe name will come up on the display. Use the **"START/STOP"** key to start the cooking cycle.

NB *- The values of the parameters defining a stored program (recipe) can be edited either before starting the cooking cycle or while the cooking cycle is in progress.*

- Nonetheless, the oven's memory will retain the original values.

If no program (recipe) is stored, the "RECIPE CATALOGUE RECIPE SELECTION" screen will show the message: ***"NO FILES"****.*

4.3.7.8 "NEW RECIPE" option

To store a NEW RECIPE, touch the P key: the **"PROGRAMMING MENU"** screen appears.

Touch the **"STEP"** STEP key to select the  icon. Touch the **"SELECT"** SELECT key to confirm your choice.

The TIME parameter screen appears: set the values of the various cooking parameters for the new recipe (see section 4.3.6). Store the new recipe (see section 4.3.7.1).

4.3.7.9 "COPY RECIPE" option

To COPY a RECIPE, the recipe (to be copied) must be present on the SUMMARY SCREEN.

Touch the P key: the **"PROGRAMMING MENU"** screen appears.

Touch the **"STEP"** STEP key to select the  icon.

Touch the **"SELECT"** SELECT key to confirm your choice. A screen comes up with the letters of the alphabet: enter the new name of the recipe and then store it in the RECIPE CATALOGUE (see section 4.3.7.1).

4.3.8 Standard functions

4.3.8.1 "LAST" function

Allows you to select the last cooking cycle that has finished: whether it was run in "manual" mode or programmed mode.

Touching the key calls up the **"EKA RECIPE CATALOGUE"** screen.

Use the **"STEP"** STEP key to select **"LAST"** (word highlighted against dark square). Touching the **"SELECT"** SELECT key calls up the summary screen for the last cooking cycle run, which you can then start by pressing the **"START/STOP"** START/STOP key.

4.3.8.2 "CAVITY COOLING" function

This function allows you to cool the cooking cavity quickly after finishing a cooking cycle.

Open the oven door (the screen will turn red).

When you touch the key, the **"COOLING"** screen will appear showing you the value of the temperature inside the cooking cavity in real time while the function is running.

The "cooling" function can be switched off at any time using the **"START/STOP"** START/STOP key; alternatively, it will end automatically once the temperature inside the cooking chamber drops to 45°C.

In both cases, once the function has finished, the warning screen against a red background appears on the display with the message "door open".

Closing the door calls up the summary screen for the cooking cycle that has just ended and you can now set a new cycle: use the **"STEP"** STEP key to select the parameters to be edited and then use the and keys to set the relevant values for each: open the door and place the product to be cooked inside the oven. To start the cooking cycle, close the door again and press the **"START/STOP"** START/STOP key.

To set a new cooking cycle with the door open, simply press the **"SELECT"** SELECT key; this calls up the summary screen for the cooking cycle that has just ended.

Within 5", use the **"STEP"** STEP key to select the parameters to be edited and then use the and keys to select the relevant values. Once you have placed the product to be cooked in the oven, you can start the cooking cycle by closing the door and pressing the **"START/STOP"** START/STOP key.

4.3.8.3 "HACCP" function

The purpose of the "HACCP" function is to record the operating data of the cooking sessions performed, monitoring their progress constantly.
The "HACCP" data are recorded on a "USB drive", which must be connected to the relevant "USB port" on the oven. The USB key is not included but is an optional accessory

ACTIVATING THE "HACCP" FUNCTION

To activate the "HACCP" function, proceed as follows:

- insert the "USB drive" in the relevant "USB port" on the oven.
- set the cooking cycle (manual or programmed)
- touch the P key to call up the "PROGRAMMING MENU" screen.
- keep tapping the **"STEP"** STEP key until you select the "HACCP" option
- touch the **"SELECT"** SELECT key to confirm your choice: the "HACCP" function is activated

Use the **"START/STOP"** START/STOP key to start the cooking cycle.

Once the cooking cycle has ended, the "HACCP" function switches off automatically.

VIEWING "HACCP" DATA (ON A PC)

To view the parameters of a completed cooking cycle on a PC:

- hold your finger on the **"START/STOP"** START/STOP key for a few seconds and switch off the oven
- remove the "USB drive" from the oven and insert it in the PC's "USB port"
- open the desired "file" contained on the "USB drive"

NB *All data relating to cooking sessions performed on the same day are contained in the same "HACCP" file.*
Once another "HACCP" file has been created for a later day, the previous "HACCP" file is renamed automatically, highlighting the date the cooking sessions took place.

The key below is given to help you interpret the "HACCP" data:

KEY

C1	START OF COOKING
C2	COOKING FINISHED SUCCESSFULLY
C3	COOKING STOPPED WITH START/STOP KEY OR AS A RESULT OF AN ALARM
AL1	ALARM: DOOR OPEN
AL2	ALARM: CORE PROBE FAULT DURING COOKING
AL3	ALARM: TEMPERATURE SENSOR IS FAULTY
AL4	ALARM: MOTOR
AL5	ALARM: SAFETY THERMOSTAT
AL9	ALARM: HEATING ELEMENTS ARE NOT CONNECTED
R	RECIPE NAME
R: MAN	RECIPE SET MANUALLY
F0	TYPE OF MANUAL RECIPE
F1	STARTERS
F2	MAINS
F3	FISH
F4	GAME
F5	BREAD
F6	VEGETABLES
F7	CAKES/DESSERTS
F8	ADDITIONAL
T1	TEMPERATURE DETECTED IN COOKING CAVITY
T2	TEMPERATURE DETECTED BY CORE PROBE
D1	DOOR WAS OPENED DURING COOKING
D2	DOOR WAS CLOSED DURING COOKING

POSSIBLE "HACCP" FUNCTION ERRORS

Type of error	Cause of error	Corrective action
Er. 1 CAN'T SAVE "HACCP"	- The "USB drive" has been removed	- Insert the "USB drive" to save data for next cooking session
Er. 2 CAN'T SAVE "HACCP"	- The "USB drive" has been removed and inserted	
Er. 3 CAN'T SAVE "HACCP"	- The "USB drive" must be formatted in the correct format	- Format the "USB drive" in FAT format to be able to save data for next cooking session

5 . SETTINGS MENU

This function allows you to view the various available settings.

Touching the M key calls up the **"SETTINGS"** screen.

Use the **"STEP"** STEP key to select the desired setting.

Touch the **"SELECT"** SELECT key to confirm the desired setting:

- DATE/TIME
- BUZZER
- INFO
- °C / °F
- SELECT LANGUAGE *(English pre-set)*
- EDIT FUNCTIONAL PARAMETERS (for "EKA" engineer only)

- DATE/TIME

Touch the **"STEP"** STEP key to select the following in the order given: **day/month/year/hour and minutes**.

Use the + and − keys to set the desired values.

Use the **"SELECT"** SELECT key to confirm the settings.

BUZZER

Touch the **"SELECT"** SELECT key to switch off the buzzer or switch it back on.

INFO

Touch the **"SELECT"** key to view the firmware versions of the circuit boards fitted on the oven.

°C / °F

Touch the **"SELECT"** key to toggle the unit of measure for the temperature between °C and °F.

SELECT LANGUAGE *(English pre-set)*

Touch the **"SELECT"** key: the **"LANGUAGES"** screen appears.

Use the **"STEP"** key to select the desired language. Touch the **"SELECT"** key to confirm your choice.

Each operation must be performed within 5", after which the cooking cycle summary screen will appear automatically.

6 . ACCESSORIES MENU

Touching the key calls up the ACCESSORIES SCREEN showing accessories compatible with the oven.

Touch the **"STEP"** key to select the name (type) of accessory to be activated. Touch the **"SELECT"** key to confirm your choice.

If no selection is made within 20", the cooking cycle summary screen will appear automatically.

7 . OVEN-USER COMMUNICATION

The oven has a USB port (fig.1) via which you can:

- "Load"/"Download" cooking programs

- Edit operating parameters

- Store data required for the "HACCP" system

Touching the P key calls up the screen showing the available functions.

Use the **"STEP"** STEP key to select the desired function. Touch the **"SELECT"** SELECT key to confirm your choice.

8. Cleaning

8.1 General information

Before you start cleaning the appliance, cut power (using the thermal-magnetic circuit breaker) and shut off the water supply. Allow it to cool completely.

The appliance must be cleaned at regular intervals, possibly daily, to ensure peak operation and extend its service life. The appliance also has electrical components inside the housing and hence, for obvious safety reasons, excessive use of water is not recommend for cleaning. Whatever the case, **it is strictly prohibited to hose it down with jets of water or steam, especially pointing them at the vents made in the metal surfaces of its housing** (with the chance of water or steam getting inside, which is hazardous and may damage electrical components).

If you are using cleaners (degreasing detergents) designed specifically for cleaning stainless steel, make sure they do not contain corrosive acidic substances (they should have a zero chlorine content, even if they are going to be diluted) or abrasive substances. Follow the directions and warnings given by the manufacturer of the cleaning product carefully and take the precaution of wearing suitable rubber gloves.

Do not, under any circumstances, use steel wool, scourers or scrapers, which can damage treated surfaces.

In addition, do not leave food containing acidic substances (lemon juice, vinegar, salt, etc.) lying on steel surfaces for any period of time as they can result in corrosive damage.

8.2.1 Manual cleaning of the oven cavity

For the sake of hygiene, it is good practice to clean the oven cavity at the end of each cooking cycle; otherwise, we advise cleaning it at least at the end of each day the oven is used.

To make cleaning easier, remove the side racks by unscrewing the 4 fastening screws (hold the screw's special knurled ring between your thumb and forefinger and turn it anticlockwise) and proceed as follows:

- spray a specific stainless steel degreasing cleaner on the inside walls, on the fan guard (do not spray through the grille onto the actual fans) and on the glass on the inside of the door;
- leave the product on for approx. 20 minutes with the door closed;
- switch the oven on, setting the temperature to 70-80°C;
- run a cycle with steam on the maximum setting (100%) for approx. 15 minutes;

- once the cycle ends, switch off the oven, allow the oven cavity to cool and rinse it thoroughly (use the shower head, where provided);
- dry using a soft cloth or running a heating cycle, setting the temperature to 150-160°C for approx. 10 minutes (where necessary, repeat the cycle).

The side racks must be cleaned separately and then refitted.
Once you have finished cleaning, leave the oven door ajar.

8.2.2 Automatic cleaning of the oven cavity (optional extra)

The "KWT" washing system, where installed, is designed to clean the oven cavity automatically.
The "KWT" kit (optional extra) can also be retrofitted on compatible oven models.
The "KWT" washing system has the following program options:

1. L1 – Short wash
2. L2 – Medium wash
3. L3 – Long wash
4. P – Peristaltic pump cleaner and rinse agent preload
5. R – Oven cavity rinse and dry without using chemical products.

NB We advise selecting the "P" program when using the "KWT" washing system for the first time. This will effectively remove air present in the peristaltic pumps and in the cleaner and rinse agent lines, thus ensuring that the system works correctly.

Warnings: do not open the door while washing is in progress as this could allow the chemical substances used for cleaning to escape along with hot fumes. Corrosion and scalding hazard!

If the screen turns red, indicating that the temperature in the oven cavity is over 100°C, washing cannot be switched on. You can go back to the summary screen by touching the "SELECT"  *key.*

8.3 Cleaning the door seal

For the sake of hygiene and proper operation, it is good practice to clean the door seal at the end of each day the oven is used. It must be washed thoroughly with lukewarm soapy water. It must be rinsed and dried with a soft cloth. Any baked-on splatter or food debris must be removed very gently, without the aid of sharp metal utensils, which could damage the seal irreparably.

8.4 Cleaning the door

The door's internal glass panel on the oven cavity side can be cleaned using the same type of degreasing product used to clean the cavity manually; otherwise, you can use a normal (non-toxic) glass cleaner. A common glass cleaner can also be used to clean the glass panel on the

outside of the door. In both cases, you can simply use lukewarm soapy water. After rinsing, dry the glass surface thoroughly with a soft cloth.
If misting occurs between the door's two glass panels, this can be eliminated by removing the internal glass panel.
To do this, unscrew the 2 screws securing the glass panel on the handle side (hold the screw's special knurled ring between your thumb and forefinger and turn it anticlockwise).
Once you have removed the dirt between the two glass panels, refit the internal glass panel, following the same procedure in reverse.

8.5 Cleaning the housing

The exterior steel surfaces must be cleaned with a cloth soaked with lukewarm soapy water or water mixed with a little vinegar. Rinse surfaces well and dry them with a soft cloth.

If you want to use specific commercially available products, they must meet the cleaning requirements specified in the "General information" section (section 4.1).

It is worth remembering that corrosive acidic substances (such as hydrochloric acid) must not be used to clean the counter the appliance sits on or the floor anywhere in the appliance's vicinity either since even the vapours they give off can eat into and damage the steel housing and damage the electrical components inside the appliance irreparably.

8.6 Mothballing

If the appliance is not going to be used for a long period of time, it is good practice to disconnect it from the electricity supply (use the thermal-magnetic circuit breaker installed upline from the appliance in question) and from the water supply. We advise cleaning the interior (oven cavity) and exterior thoroughly, being particularly careful to remove any salt left on the steel surfaces, which can cause corrosion.

It is also advisable to protect the appliance with an oil-based spray (such as Vaseline oil), which forms an effective protective film when sprayed onto steel surfaces.

Lastly, place an appropriate cover over the appliance to keep dust off.

9. Maintenance

9.1 General information

Getting the appliance checked at regular intervals (at least once a year) helps extend the life of the appliance and keep it working properly.
Any maintenance work on the appliance must be carried out only by personnel with suitable technical qualifications duly trained in the procedures to be performed.
Before performing any maintenance work on the appliance, it must be disconnected from the electricity supply (by means of the thermal-magnetic circuit breaker installed upline from the appliance) and allowed to cool.
The components that may require maintenance can all be reached by removing the appliance's left side panel and back panel.

9.2 Replacing the door seal

The door seal has a rigid edge with 4 clips holding it in place. This edge must be inserted in the relevant guide found on the oven cavity side.
To replace the seal, simply pull the old one out of the guide (pull firmly near the 4 corners). Remove any foreign matter from the guide and clip the new seal in place (to make it easier to fit, we suggest moistening the seal's edge with soapy water).

9.3 Cleaning the fans

Fans must be cleaned at regular intervals with appropriate limescale products. All parts of the fans must be cleaned carefully, removing any limescale.
To gain access to the fans, simply remove the fan guard after first unscrewing the screws fastening it to the oven cavity. Once you have finished cleaning, refit the guard by following the same procedure in reverse.

9.4 Adjusting the handle

If the door handle is not closing properly, check and, where necessary, adjust the position of the "catch" as follows:

1. With the oven door open, loosen the "catch" fastening screws.
2. Move the "catch" vertically and fasten it so that, when the door is closed, it fits into the handle – in the completely open position (horizontal) – without scraping.
3. Following adjustment, the handle should be in the vertical position with the door closed (the tip of the "catch" should be perfectly horizontal).

9.5 Troubleshooting

Type of fault	Cause of fault	Corrective action
Control panel completely dark (oven not working)	- Incorrect connection to mains power supply	- Check mains power supply connection
	- Mains power not on	- Restore mains power
	- Safety thermal breaker tripped	- Call in a qualified engineer
	- Fuse protecting the circuit board (with microprocessor) has blown	- Call in a qualified engineer
Cooking cycle set and "START" key activated: oven not working	- Door open or ajar	- Close the door properly
	- Magnetic sensor damaged	- Call in a qualified engineer
Steam cycle activated: no steam is generated in the oven cavity	- Incorrect connection to the water mains	- Check water mains connection
	- ON/OFF valve closed	- Check valve
	- Water inlet filter clogged	- Clean filter
	- Water inlet solenoid valve damaged	- Call in a qualified engineer
Door closed: steam escaping out of seal	- Seal not fitted properly	- Check how seal has been fitted
	- Seal damaged	- Call in a qualified engineer
	- Handle "catch" loose	- Call in a qualified engineer
Oven not cooking evenly	- One of the motors is jamming or running at slow speed	- Call in a qualified engineer
	- Motors fail to reverse	- Call in a qualified engineer

9.6 Possible alarms

Type of alarm	Cause of alarm	Effect	Corrective action
	- Break in connection between oven cavity probe and circuit board/microprocessor. - Oven cavity probe damaged.	- Oven stopped	- Call in a qualified engineer
	- Break in connection between core probe and circuit board/microprocessor. - Needle core temperature probe damaged.	- A cooking cycle cannot be activated where it involves setting the "core temperature" parameter	- Call in a qualified engineer
	- Motor overheating (motor's thermal breaker tripped).	- Oven stopped	- Call in a qualified engineer
	- Safety thermostat tripped	- Oven stopped	- Call in a qualified engineer
Temperature > 100°C	- Oven cavity temperature is over 100°C	- Automatic wash cycle cannot be activated	- Cool the oven cavity: open the door and touch the  key to switch on automatic cooling.
 BLACKOUT (during cooking cycle)	- Outage	- Oven turns off	- Press **"SELECT"**  to restart the oven

the alarm  can only occur when using the core probe (optional)

9.7 Wiring diagrams

MODELS EKF 664 TC – EKF 711 TC

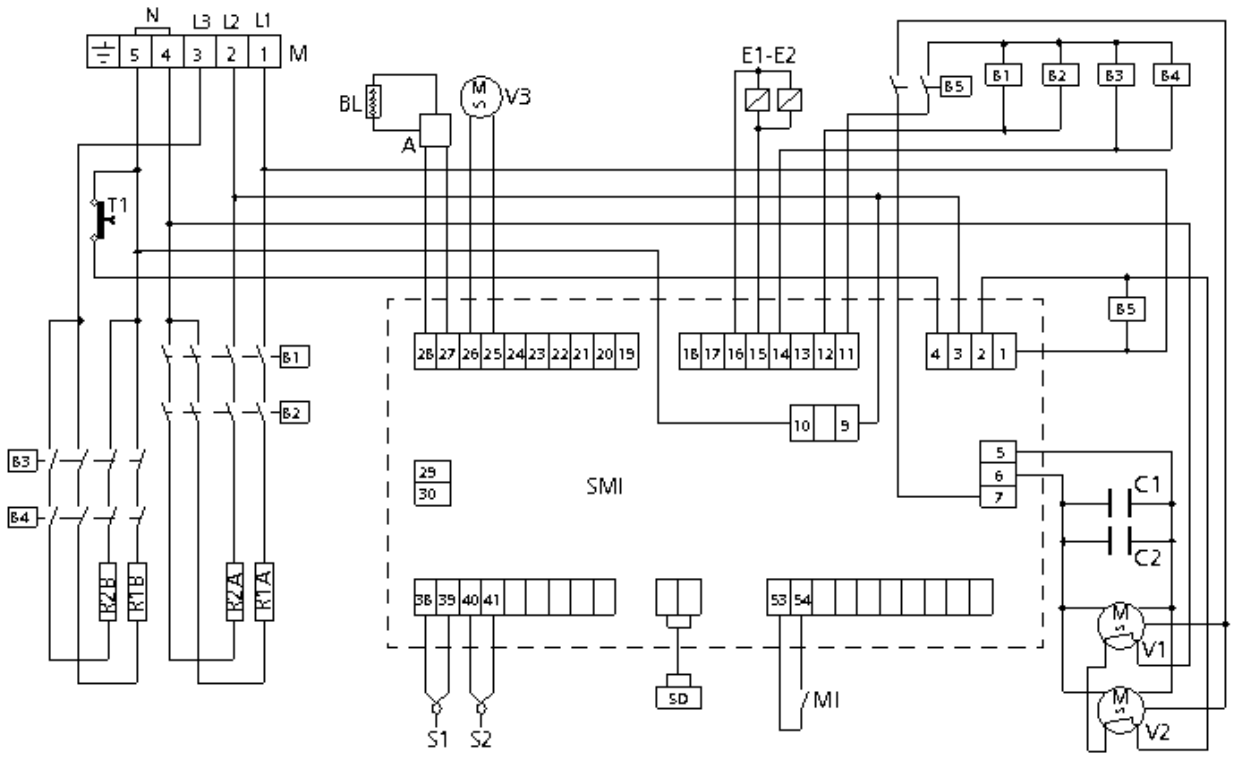

Key

M	Power supply terminal block	A	LED bar power supply
B1-B2-B3-B4	Contactor coils	BL	LED bar
B5	Relay coil	MI	Door microswitch
R1-R2(A-B)	Circular heating elements	E1	Water solenoid valve
T1	Safety thermostat	S1	Oven cavity probe
C1-C2	Capacitors	S2	Food "core" probe
V1-V2	Radial motor-driven fans	SMI	Microprocessor board
V3	Motor-driven cooling fans	SD	Display board

MODELS EKF 1064 TC – EKF 1111 TC

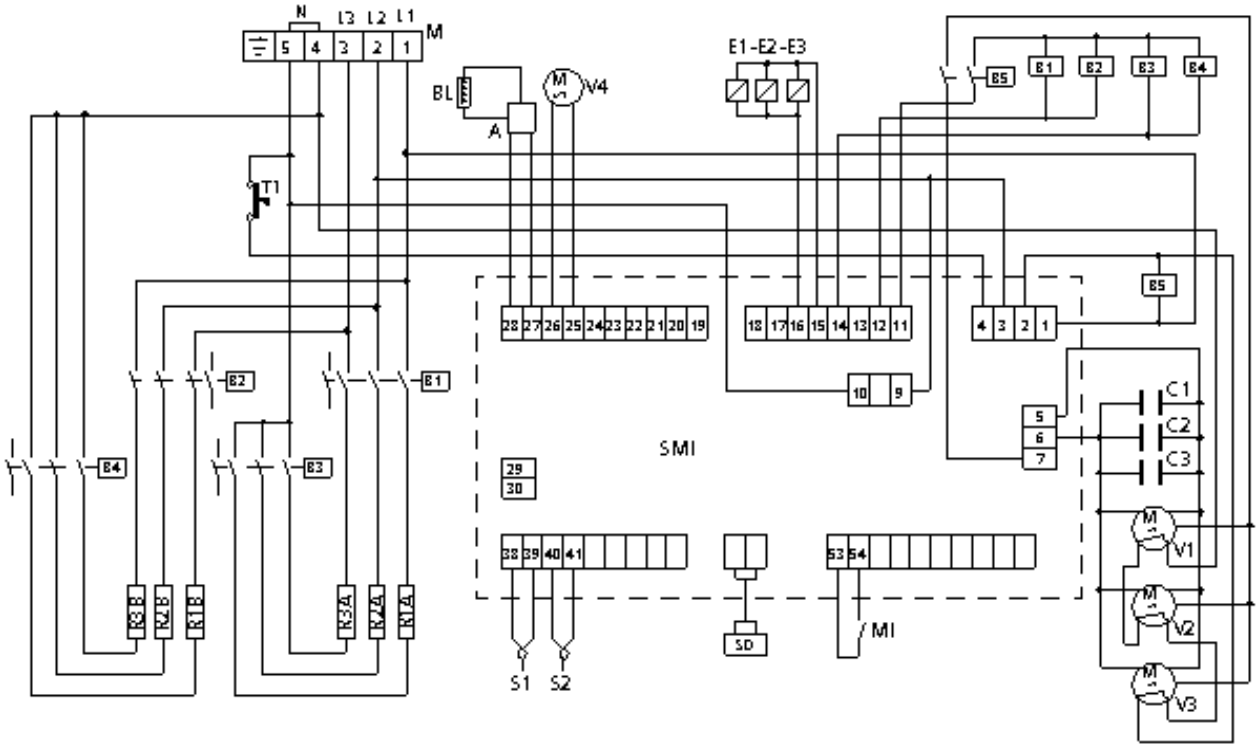

Key

M	Power supply terminal block	A	LED bar power supply
B1-B2-B3-B4	Contactor coils	BL	LED bar
B5	Relay coil	MI	Door microswitch
R1-R2-R3	Circular heating elements	E1-E2-E3	Water solenoid valves
T1	Safety thermostat	S1	Oven cavity probe
C1-C2-C3	Capacitors	S2	Food "core" probe
V1-V2-V3	Radial motor-driven fans	SMI	Microprocessor board
V4	Motor-driven cooling fans	SD	Display board

MODELS EKF 1664 TC – EKF 2011 TC

Power diagram

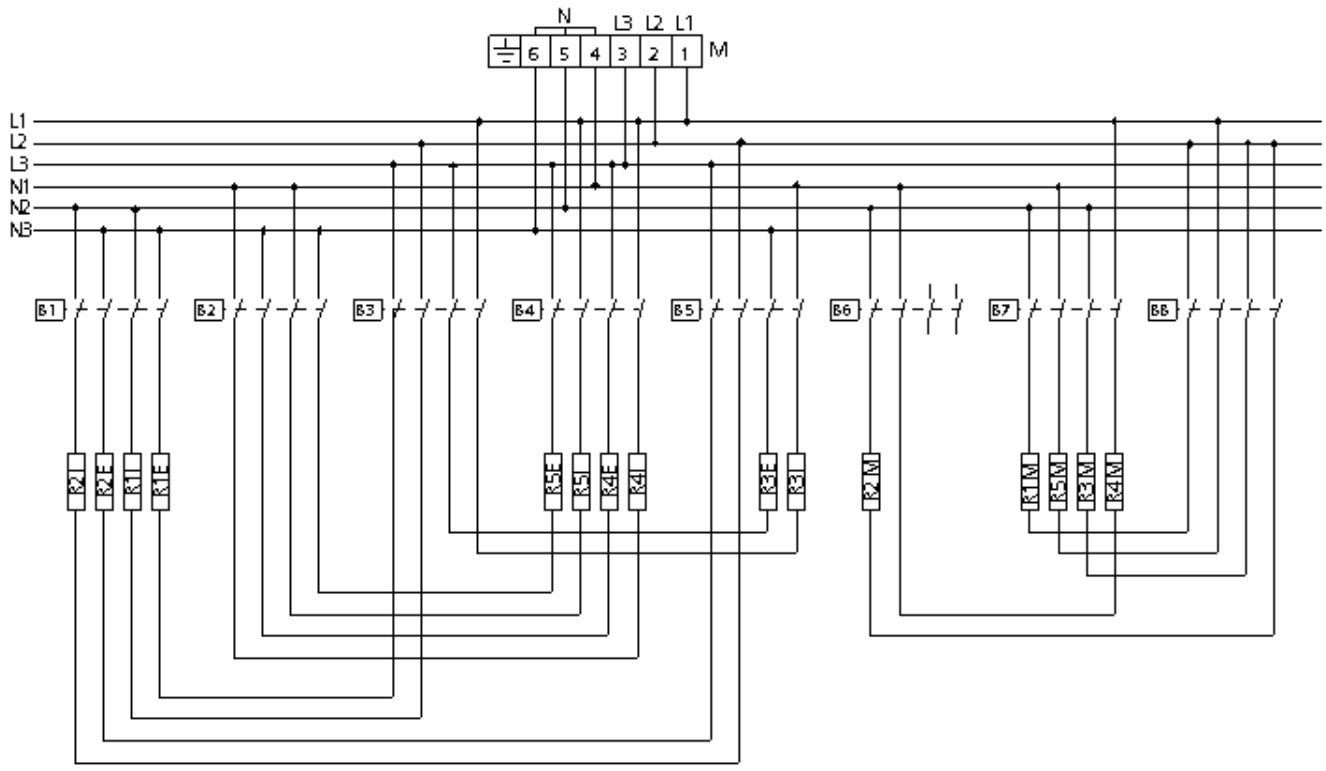

Key

M	Power supply terminal block
L1	Line 1 terminal
L2	Line 2 terminal
L3	Line 3 terminal
N1	Neutral 1 terminal
N2	Neutral 2 terminal
N3	Neutral 3 terminal
B1-B2-B3-B4-B5-B6-B7-B8	Contactor coils
R1-R2-R3-R4-R5	Circular heating elements

MODELS EKF 1664 TC – EKF 2011 TC

Control diagram

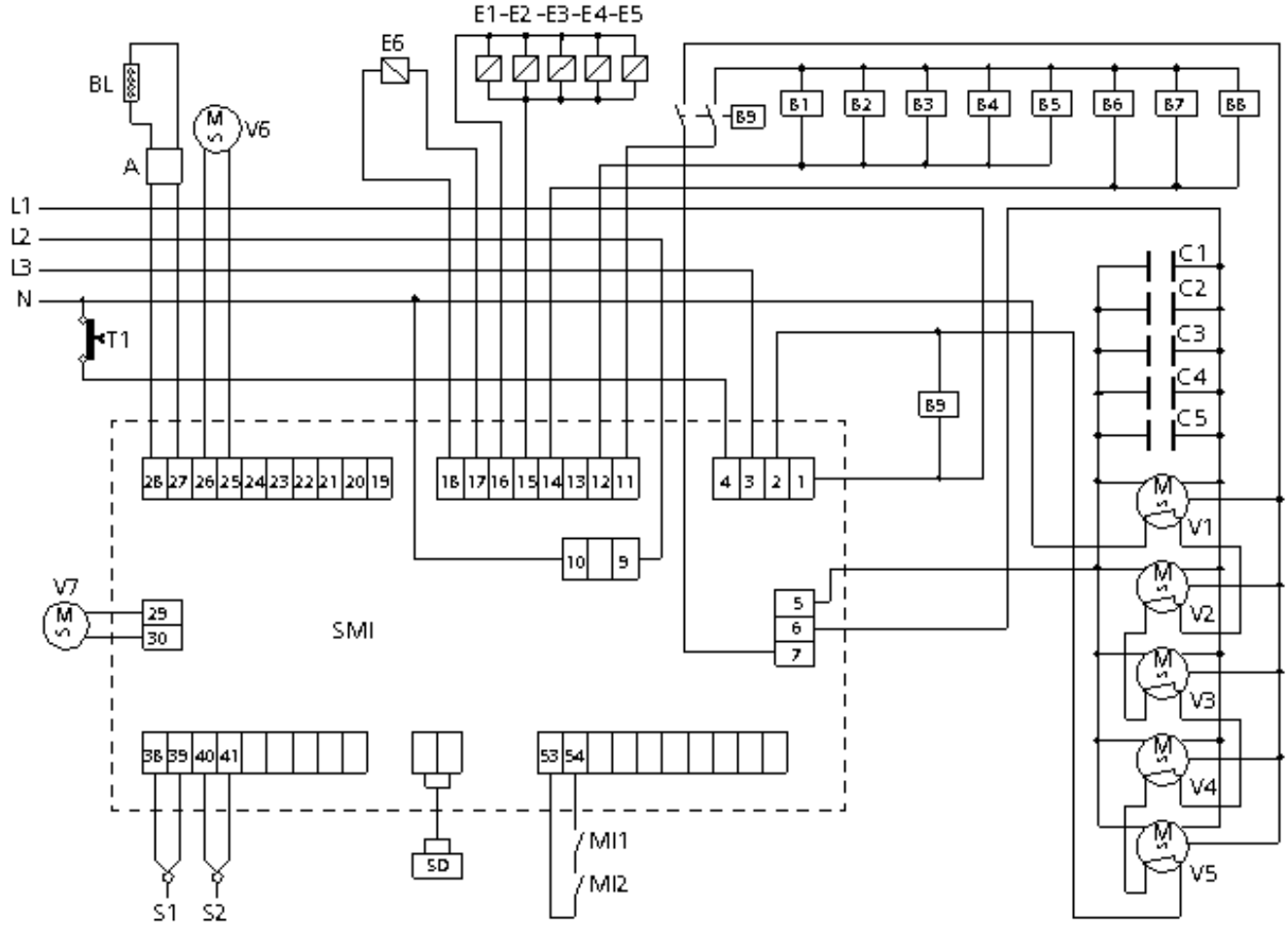

Key

M	Power supply terminal block
L1	Line 1 terminal
L2	Line 2 terminal
L3	Line 3 terminal
N	Neutral terminal
B1-B2-B3-B4-B5-B6-B7-B8	Contactor coils
R1-R2-R3-R4-R5	Circular heating elements
E1-E2-E3-E4-E5	Water solenoid valves
C1-C2-C3-C4-C5	Capacitors
V1-V2-V3-V4-V5	Radial motor-driven fans
B9	Relay coil
V6-V7	Motor-driven cooling fans
A	LED bar power supply
BL	LED bar
T1	Safety thermostat
MI	Door microswitch
S1	Oven cavity probe
S2	Food "core" probe
SMI	Microprocessor board
SD	Display board

10. Technical service

Before leaving the factory, this appliance was tested and adjusted by expert, specialized personnel for best operating results. Any repairs or adjustments that may be necessary must be performed with the utmost care and attention, using original spare parts only.

That is why you should always contact the Dealer who made the sale or our nearest Service Centre, specifying the type of trouble and the model of your appliance. The parts required to adapt the appliance to a different type of gas are supplied as standard with the appliance and therefore are provided at the time of sale or on delivery.

If you require service, you can contact Tecnoeka by calling the numbers given on the cover or by checking out the website www.tecnoeka.com.

11. Information for users

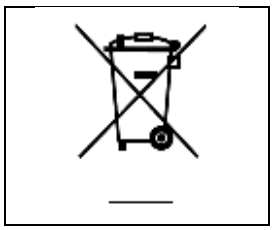

In accordance with Directive 2002/96/EC, the crossed-out wheelie bin symbol featured on the equipment indicates that the product must be collected separately from other waste at the end of its service life. Consequently, at the end of the appliance's life, the user is required to take it to a suitable separate collection facility handling electronic and electrical waste

Separating waste and having it collected for subsequent processing, reuse and disposal encourages the production of equipment with recycled materials and limits negative effects on the environment and health that can come from improper waste handling.

Unlawful disposal of the product by the user shall result in the application of fines as laid down in relevant legislation (in Italy, this is article 50 and following of legislative decree (D.Lgs.) 22/1977).

12. Warranty

Your new appliance is covered by a warranty. The seller undertakes to repair or replace – in his sole discretion – free of charge to you, only those parts of the seller's products that prove to be affected by a defect that was there at the time of sale, provided you meet the following requirements (or the warranty shall not be applicable):

- for appliances for domestic use, you must report the defect within 2 months from the date it was discovered; whatever the case, defects must be reported within 2 years of the purchase date;
- for appliances for professional use, you must report the defect within 8 days from the date it was discovered; whatever the case, defects must be reported within 12 months of the purchase date;

by registered letter with advice of delivery, attaching a copy of the invoice or tax receipt proving the date of purchase.

You **will not be covered by the warranty** in the event you are unable to produce the invoice or tax receipt proving the date of purchase, or if the above-mentioned deadlines are not met, or in any of the following cases:

1) faults or breakages occur during transport or handling;
2) the product is installed incorrectly (for instance, the flues or drains to which the product is connected prove insufficient) based on the instructions given in the operating manual that comes attached to the product;
3) the electricity, water and/or gas supplies do not meet requirements or are not working properly;
4) the product is used carelessly, negligently or incompetently based on the instructions given in the relevant operating manual;
5) the product is used for any purpose other than that for which it was designed or in any way that is not in compliance with the instructions given in the relevant operating manual;
6) the product is tampered with;
7) adjustment and/or maintenance and/or repair work is carried out on the product by unauthorized personnel and/or using non-original spare parts;
8) product maintenance is insufficient or negligent and not in line with the maintenance instructions laid down in the operating manual;
9) damage was caused by fires, natural events or other accidental events, or by any cause that cannot be attributed to TECNOEKA SRL.

In addition, the warranty does not cover: painted or enamelled parts, knobs, handles, moving or removable plastic parts, lamps, glass parts, firebricks and all accessories, if any.

TECNOEKA SRL is not responsible for direct or indirect injury or damage caused by the product being faulty or resulting from the product being unable to be used.

Repairs performed under warranty shall not result in the warranty in question being extended or renewed

Nobody is authorized to change the terms and conditions of the warranty or to issue other reports or writings in connection with it.

The warranty is valid only for appliances installed within the EU.

For the settlement of any dispute, the sole court of competent jurisdiction shall be the court of Padua (Italy).

Warnings for the purchaser:

1. the cooking appliance is designed solely for food use, whereas the heating appliance is designed solely for heating domestic interiors;
2. TECNOEKA S.r.l. does not handle product installations; in the event installation is carried out by the seller, the seller alone is responsible;
3. TECNOEKA S.r.l. is not responsible for direct or indirect injury to people or pets or damage to property caused by the product being faulty or resulting from the product being unable to be used.

The Manufacturer is not responsible for any inaccuracies, due to printing or transcription errors, contained herein. The Manufacturer reserves the right to make any changes to its products it deems necessary or useful, or even in the users' interests, without compromising the essential operating and safety characteristics.