MOUNTING :

IMPORTANT:
WARNING: THE BOILER MUST BE MOUNTED ON A SOLID CONCRETE WALL BY A QUALIFIED FITTER. MARCO DOES NOT ACCEPT RESPONSIBILITY FOR THE SAFETY OF ANY MACHINE NOT INSTALLED ON A SOLID CONCRETE WALL.

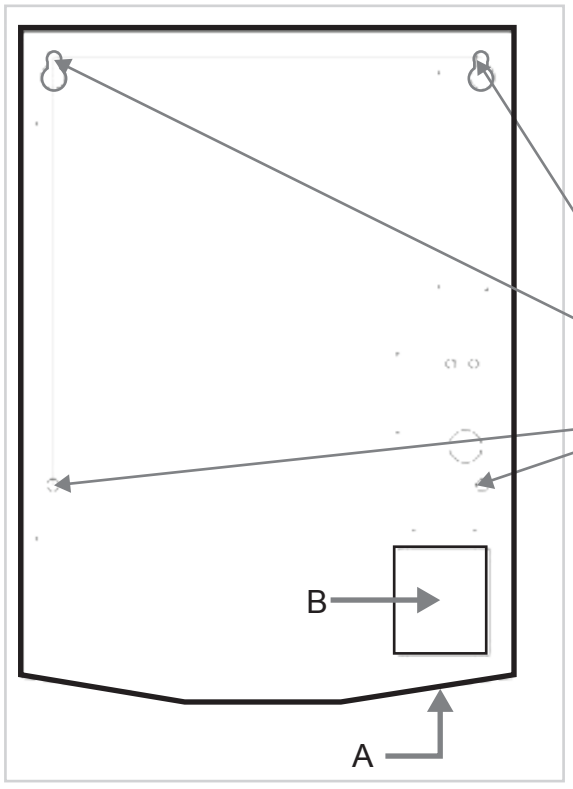

• Insert anchor plugs into the drilled wall. (See mounting footprint on reverse)
• Remove side panels (two screws on the top of the machine)
• Plumb machine to mains using either option:

Option 1: Plumbing from bottom.
Remove the cover plate at the base of the machine.
Feed the inlet hose through the square hole at the base of the machine. (See point A on figure above)
Attach the non-angled hose end to the solenoid.

Option 2: Plumbing from rear.
Feed the inlet hose through the rectangular hole at the rear of the machine. (See point B on figure above)
Attach the angled hose end to the solenoid.

• Ensure the overflow hose lies outside of the machine.
• Bolt the machine securely to the wall using bolts.
• Replace the side panels and secure in place.

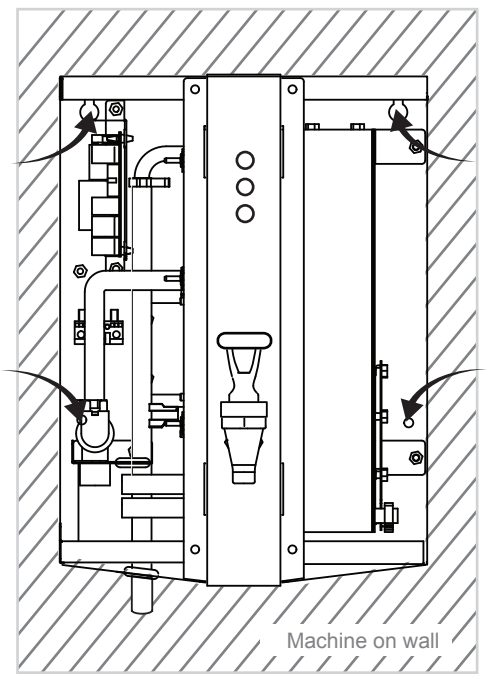
Machine on wall

ACCESS TO INTERNAL COMPONENTS:

Any maintenance work on any Ecoboiler product should ONLY be conducted by a trained service engineer.

Removal
1.Disconnect the machine from the electrical supply
2.Allow to cool sufficiently.
3.The removable side panels are fixed at the top of the machine.
4. Removewith a Philips head screwdriver.
5.Remove the panels in an upward and outward motion.

Reassembly
To re-attach the front panels, complete the removal actions in steps 4 & 5 in reverse order.

SAFETY:

•This appliance must be earthed.

•Risk of flooding. The hose supplied with this unit is non-toxic food quality tested to 190psi. However, a hose is not a permanent connection. It is, therefore, advisable to switch off boiler and close the stopcock valve when boiler is not in use, e.g. overnight, weekends etc.

•Risk of scalding. Beware of accidentally operating the water draw off tap.

•The utmost care has been taken in the manufacture and testing of this unit. Failure to install, maintain and / or operate this boiler according to the manufacturer's instructions may result in conditions that can cause injury or damage to property. If in any doubt about the serviceability of the boiler always contact the manufacturer or your own supplier for advice.

•This appliance is not intended for use by persons (including children) with reduced physical, sensory, or mental capabilities, or lack of experience and knowledge, unless they have been given supervision or instruction concerning use of the appliance by a person responsible for their safety.

•Children should be supervised to ensure that they do not play with the appliance

•In the event any wires are damaged, such wires can only be replaced by experts or professional after service staff from the manufacturer, after service department or similar function departments

•The appliance must be securely fitted to a suitable wall.

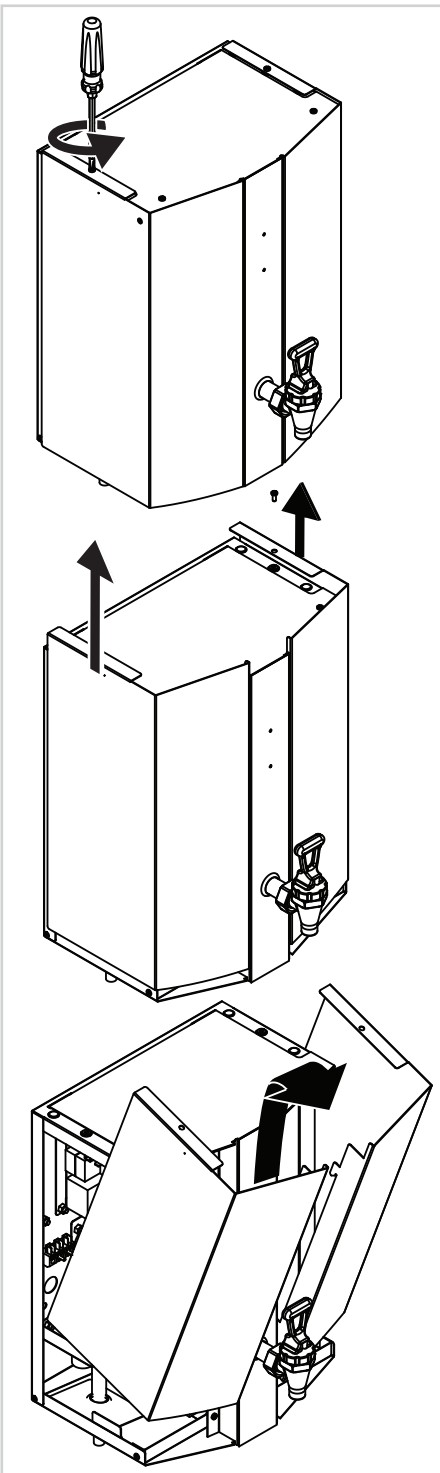

INSTALLATION DETAILS:

Electrical installation:

•Electrical specification: 2.4kW-230V-50Hz
•Suitable fusing for a 2.4-3 KW circuit.
•Ensure the machine is fully earthed.

Plumbing installation procedure:

Note: Marco recommend that this machine be positioned over a counter with a drainage facility. Marco cannot be held responsible for any flood damages.

- Mains water pressure required (limits): 5-50psi (35-345kPa)
- Fit a stop Valve on a cold water line and attach a 3/4" BSP male fitting, (E.g. 3/4" x 1/2" 311 or washing machine type stop valve).
- Connect the hose to the inlet valve of the boiler (again 3/4" BSP). The orientation of the tail piece will vary depending on whether machine is plumbed at the rear or at the underside.
- Connect the other end of the inlet hose to the stop valve fitting. Make sure that the pre-attached sealing washer is fitted.
- If the overflow tubing is pumped it must be pumped with a tundish device. If the overflow tubing it not pumped the overflow tube should stick out of the base of the machine.
- Turn on water and check for leaks.
- Turn on the water to flush any impurities, dust etc from the inlet hose and water pipe. Allow several litres through.

Operating boiler for the first time:

- Check that all installation procedures have been carried out.
- Ensure water valve is on and there is power to the appliance.
- The "Ready/Status" light will cycle two red flashes while the machine is filling to the safe level.
- After this amount of water has heated to about 96ºC the boiler will draw more water in until the temperature drops by 1 or 2 degrees. The boiler will then heat again.This heat fill cycle continues until the boiler is full.
- Whilst the machine is above the safe level and filling, the "Ready/Status" light will remain blank.
- The "Ready/Status" light will glow green when the machine is both full and up to normal operating temperature.
- The boiler is now ready for use.



POWER BUTTON

READY/ STATUS INDICATOR

ECO MODE BUTTON

NOTE: Because the boiler is electronically controlled no priming is necessary. The element cannot switch on until a safe level of water is reached.

ECO Mode Operation:

•All ECO Boilers use high grade insulation and it is applied to give a significant energy usage improvement over a standard water boiler.
•The ECO Boiler incorporates a ½ tank 'ECO mode' function.
•To enable the 'ECO Mode' press the button located below the 'Ready' indicator so that the leaf symbol illuminates green.
•This mode saves energy by minimising the energy wasted during machine down-time.
•NOTE: The ECO mode is most effective in installations where the machine has a regular 'off' period.
•To achieve the most benefit from the energy saving 'ECO Mode' on your ECO boiler unit the following method should be employed:

Towards the end of the boilers operating period for a given day, switch the machine to ECO Mode.
Whilst maintaining water at 96oC, the machine tank will slowly drop to half full, where it will remain.
At the end of the machines operating period it should be turned 'off'.
During the 'off' period as there is less water in the tank there will be less energy lost to the surrounding environment resulting in an energy saving.

To disable simply press the 'ECO Mode' button again so that the leaf symbol is not illuminated

TROUBLESHOOTING:

The Ready/Status light signals various errors or problems. A cycle of red flashes indicates an error. The number of flashes in a cycle corresponds to the symptom in the table below: Status/Diagnostic light guide:

No of flashes	Symptom	Action required
2	Water level below elements. Normal when machine first fills.	Check water pressure , if this is OK then call service agent.
3	Temperature sensor failure (o/c)	Call service agent
4	Water not heating	Call service agent
5	Temperature sensor failure (s/c)	Call service agent
6	Machine not filling	Check water pressure, if OK then call service agent.

CLEANING:

The exterior of these machines may be cleaned with a damp cloth and a light detergent. Do not use abrasive cloths or creams, as this will spoil the finish of the machine. Do not use a water jet or spray.
NB: Beware of accidentally operating the draw off tap or push button when cleaning the front of the machine.

LIMESCALE:

In common with all water boiler manufacturers, service calls resulting from limescale are not covered by warranty. Fitting a scale reducer is recommended, especially in hard water areas. This can reduce the build-up of scale but may not stop it altogether. The frequency that descaling is required depends on the local water supply; hard water areas need more attention. Descaling of the machine should ideally be carried out by qualified service personnel.

Ecoboiler Wallmount Footprint on reverse.

MARCO is an ISO9001:2000 Registered Company

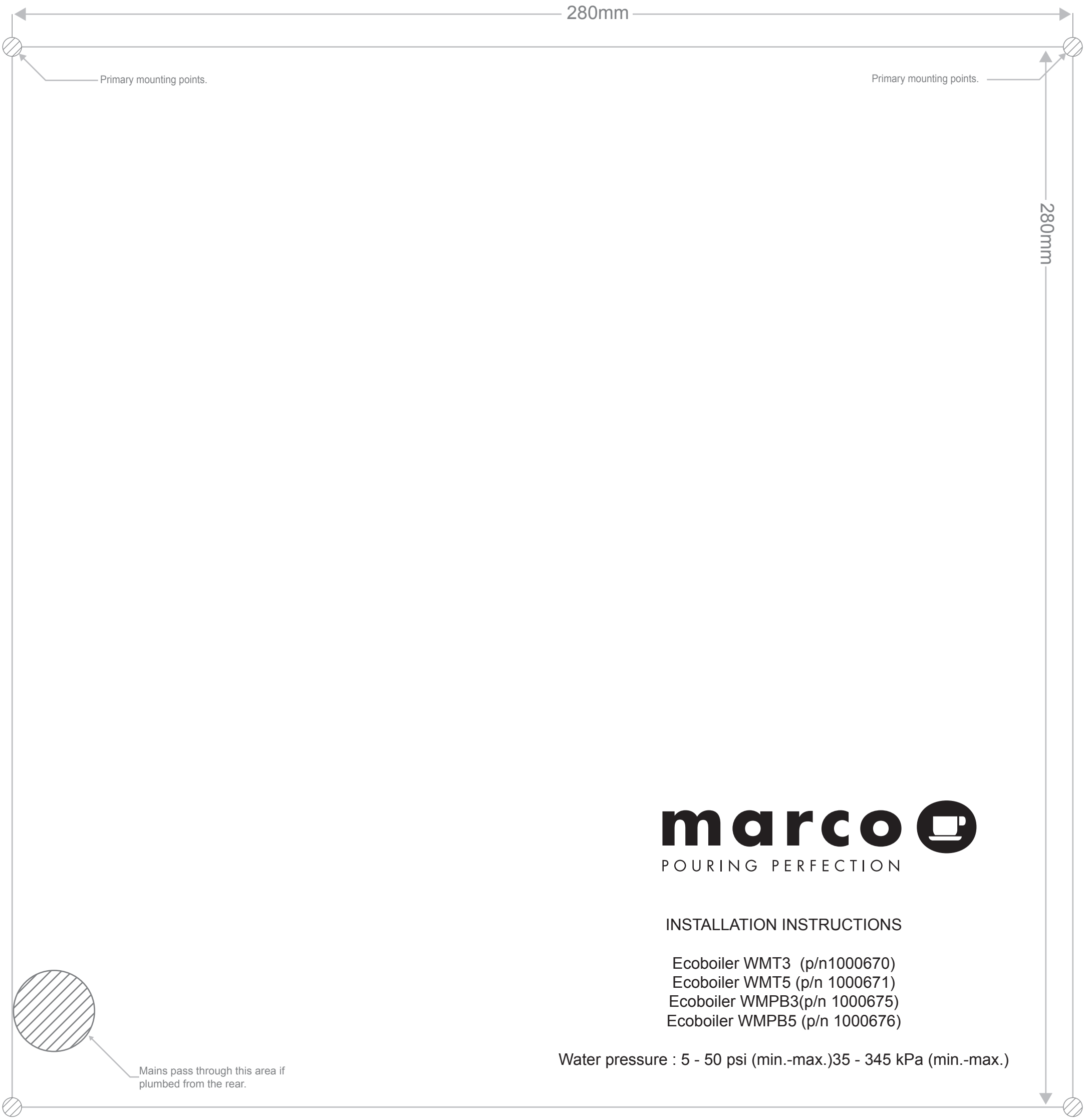

marco
POURING PERFECTION

INSTALLATION INSTRUCTIONS

Ecoboiler WMT3 (p/n1000670)
Ecoboiler WMT5 (p/n 1000671)
Ecoboiler WMPB3(p/n 1000675)
Ecoboiler WMPB5 (p/n 1000676)

Water pressure : 5 - 50 psi (min.-max.)35 - 345 kPa (min.-max.)

Ecoboiler Wallmount
Footprint
1:1



Marco Beverage Systems Limited. 63d Heather Road, Sandyford Industrial Estate, Dublin 18.	Marco Beverage Systems Limited. Shire House, Strixton Manor, Strixton, Wellingborough, Northants, NN29 7PA
Ireland Tel: +353 (0)1 295 2674 Ireland Fax: +353 (0)1 295 3715 email: sales@marco.ie www.marco.ie	UK Tel: +44 (0)2072 744 577 UK Fax: +44 (0)2079 788 141 email: sales@marco-bev.co.uk www.marco-bev.co.uk