marco

JET9 TWIN

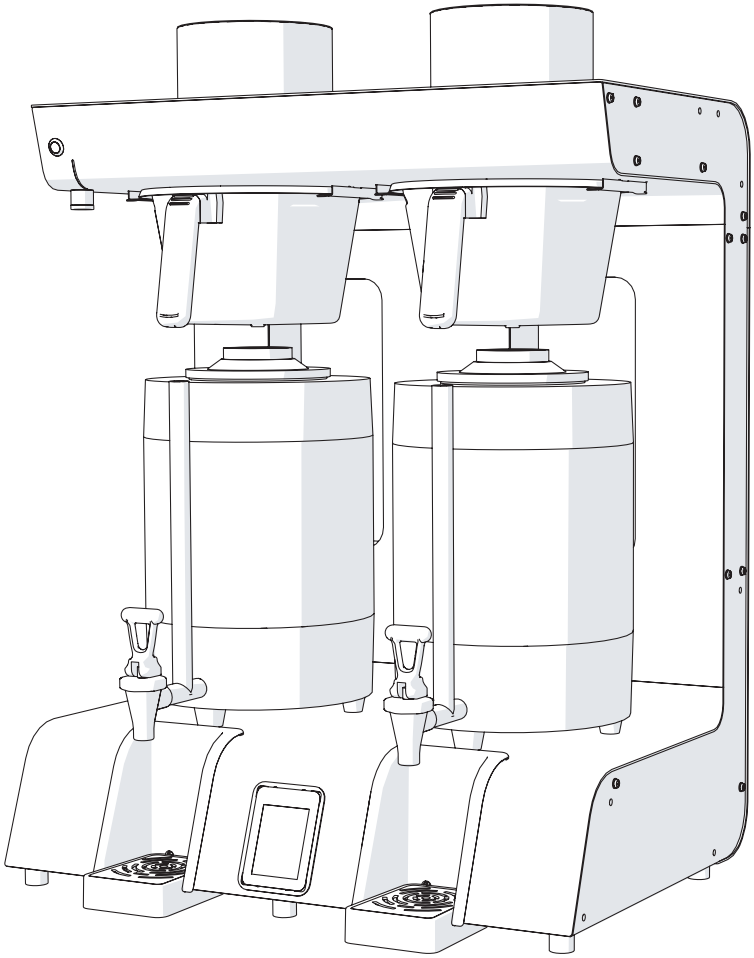

1900097

CONTENT PAGE

INFORMATION 3

INSTALLATION 6

BREWER 6

GRINDER 7

BREWER SETUP 11

BREWING 12

MANUAL MODE 12

DILUTION 14

GRINDER MODE 15

PACKS MODE 17

CLEANING 19

KEY


READ OPERATORS MANUAL


BREWING


DAMP CLOTH


GRINDING


WAIT


WEIGH


RINSE


DISPOSE

INTRODUCTION

The information provided in this manual is intended to assist in the installation and maintenance of the JET 6 Twin Coffee Brewer & FCG 6 grinder. Please read the instructions carefully to prevent accidents and ensure an efficient installation.

This manual is not a substitute for any safety instructions or technical data affixed to the machine or its packaging. All information in this manual is current at the time of publication and is subject to change without notice.

The company accepts no responsibility for any damage or injury caused by incorrect or unreasonable installation and operation.

RATING PLATE



A. Model Number and name.
B. Product serial code (mmyyxxxxxx)
C. Rated Voltage.
D. Rated Power.
E. Contact details.
F. WEEE Logo
This logo indicates that the product must not be disposed of as household waste. To help prevent possible harm to human health and/or the environment, the product must be disposed of in an approved and environmentally safe recycling process. For further information on how to dispose of this product correctly, contact product supplier, or the local authority responsible for waste disposal in your area.
G. Regulatory standard logo
This equipment has been designed and tested to comply with all applicable regulatory standards set by international, independent and government authorities.

SAFETY INSTRUCTIONS

- Installation, maintenance and use should only be carried out by authorised personnel.
- Installation should be in accordance with applicable regulations of the country of installation.
- This appliance is not intended for use by persons (including children) with reduced physical, sensory or mental capabilities, or lack of experience and knowledge, unless they have been given supervision or instruction concerning use of the appliance by a person responsible for their safety.
- Children should be supervised to ensure that they do not play with the appliance.
- Position on a flat, stable surface.
- **DO NOT**
  - Touch hot surfaces.
  - Immerse the appliance in water.
  - Leave appliance unattended during operation.
  - Remove filter basket during use.
  - Use outdoors.
- Disconnect from power supply when appliance is not in use
- Repairs and service should only be carried out by a service technician.
  - Appliance must be fully disconnected from mains power before removing any panels.
  - If the power cord is damaged, it must be replaced by the manufacture, its service technicians or similarity qualified persons to avoid hazard.
- Before any attempt is made to move or service the brewer ensure it is unplugged, and drained and allowed to fully cool.
- The ambient temperatures this unit should operate within are 5ºC - 35ºC.
- This appliance should not be installed in a tightly enclosed area (such as a cupboard). Air should be able to freely circulate around it.
- The appliance is not suitable for installation in an area where a water jet could be used.

The appliance is designed for use as described in the instructions. Failure to install, maintain and/or operate this brewer according to the manufacturer's instructions may result in conditions that can cause injury or damage to property. If in any doubt about the serviceability of the brewer always contact the manufacturer or your own supplier for advice.

PLUMBING

Permissible mains inlet water pressure:
Minimum 20kPa / 0.02MPa / 0.2bar / 2.9psi
Maximum 1000kPa / 1MPa / 10bar / 145psi
The inlet water must be potable and free of contaminants.
Inlet water should be 5-30°C, pH 6.5-8.5, maximum chlorine content of 100 mg per litre, total hardness of 60-180ppm. Do not connect the machine to pure reverse osmosis water or other aggressive types of water. Ensure that the equipment is installed according to local plumbing & water regulations.

Installation procedure:

• Fit a stop valve and suitable fitting on a cold water line (e.g. 3/4" x 1/2" 311 or washing machine type stop valve).
• The boiler requires a suitable food grade inlet hose with 3/4" BSP female elbow fitting which will attach to the underside of the machine.
• Make sure that the pre-attached sealing washer is fitted on both ends.
• Turn on the water to flush any impurities, dust etc. from the inlet hose and water pipe. Allow several gallons through.
• Connect right-angled tailpiece of the hose to the inlet valve of the boiler (again 3/4" BSP). Make sure the sealing washer is fitted here again.
• Turn on water and check for leaks.

NOTE: Using a non-food grade hose (e.g. a washing machine hose) will usually result in off-tastes & smells in the water, and can possibly be toxic.

LIMESCALE

In common with all water boiler manufacturers, service calls resulting from lime scale are not covered by warranty. Fitting a scale reducer is recommended, especially in hard water areas. This can reduce the build-up of scale but may not stop it altogether. The frequency that descaling is required depends on the local water supply; hard water areas need more attention. Machines typically need descaling every 3-6 months. Descaling of the machine requires removal of panels and must only be carried out by qualified service personnel who must read the full warnings contained in this manual, and must contact the manufacturer for detailed descaling instructions. Aggressive descaling agents can damage the stainless steel tank. Citric acid based descaling agents are recommended, the tank must be fully flushed through at least twice to remove all residues.

It is recommended to de-scale the machine every 3 months in hard water areas and every 6 months in soft water areas. Descaling should be carried out by a service agent. It is also recommended to clean the urn after each days brewing using a proprietary urn-cleansing compound.

CLEANING

The exterior of these machines may be cleaned with a damp cloth and a light detergent. Do not use abrasive cloths or creams, as this will spoil the finish of the machine. Do not use a water jet or spray. Beware of accidentally operating the draw off tap when cleaning the front of the machine.

ACCESSORIES

The following accessories can be used with the brewer.
- Grinder p/n.1000890
- Urn p/n.1700169
- Filter Paper p/n.8000151

Electrical Installation Procedure	
1000650# - 5.6kW/230V ac	This device must be connected to a suitable 30A single phase power supply. This should be done by a qualified electrician. If the device is installed by fixed wiring means the addition of an isolation device is required in close proximity to the equipment. If the device is intended to be powered via an industrial plug the plug/socket outlet should be easily accessible. Fixed wiring insulation must be protected by the insulating sleeving having the appropriate temperature rating.
This appliance must be earthed	

TROUBLESHOOTING

Fault	Probable Cause	Action
Blank Screen	The unit is not switched on	Check the unit is plugged in correctly and switched on
	Plug or lead are damaged	Call a qualified service technician
	Power supply	Check power supply
	Internal wiring fault	Call a qualified service technician
Brewer not “Ready”	Water not connected	Connect water to the rear of the machine.
	Element failure	Call a qualified service technician
Grinder not working	The unit is not connected to the brewer	Check the unit is plugged into the brewer.
The coffee is too weak	Not enough ground coffee has been used	Increase the amount of coffee
	Coffee grind is too coarse	Reduce the coarseness of the grind
The coffee is too strong	Too much ground coffee has been used	Reduce the amount of coffee
	Coffee grind is too fine	Increase the coarseness of the grind
	Not enough water has been used	Increase the amount of water
The basket is overflowing	Coffee grind is too fine	Increase the coarseness of the grind
	Too much ground coffee has been used	Reduce the amount of coffee
Probes Error	Build-up of scale on the probes	Check probe wiring. Check probes. Descale the tank.
Thermistor Error	The thermistor response is out of temperature range	Check the thermistor is connected & in the thermistor pocket. Change the thermistor.
Heater Error	The machine is not registering water heating up	Check if the thermistor is in its pocket & then check the heating element.
Overfill Error	Tank is filled with too much water	Check level probe for scale build up. Descale the tank.


1

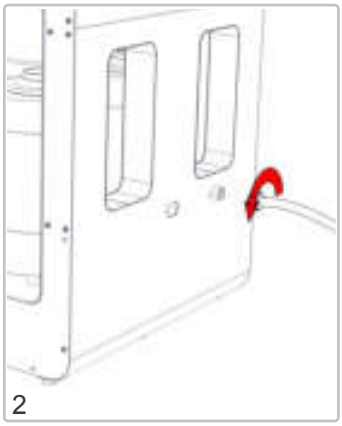
2

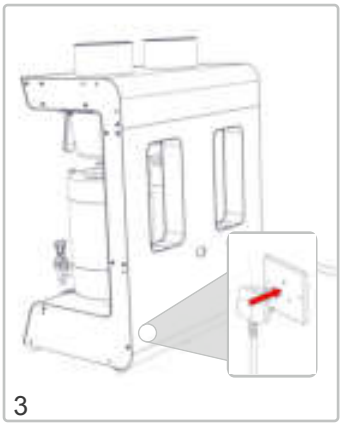
3


O
I
4

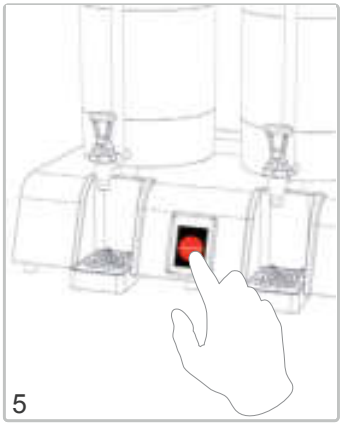
5

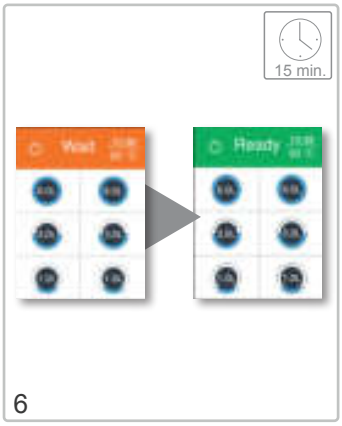
15 min.
Wait
Ready
6


1

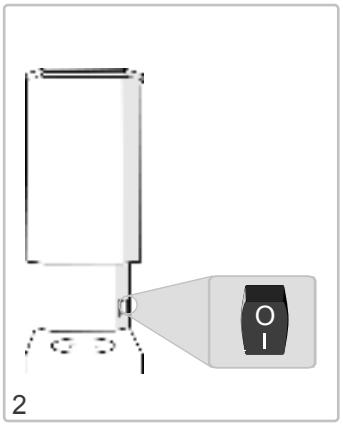
2

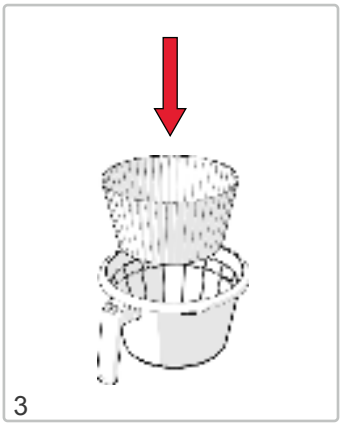
3


4

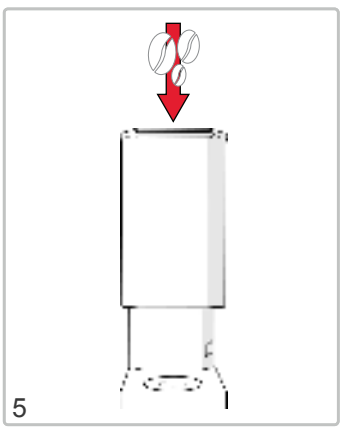
5

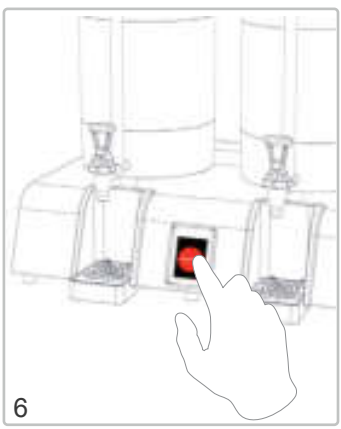
6

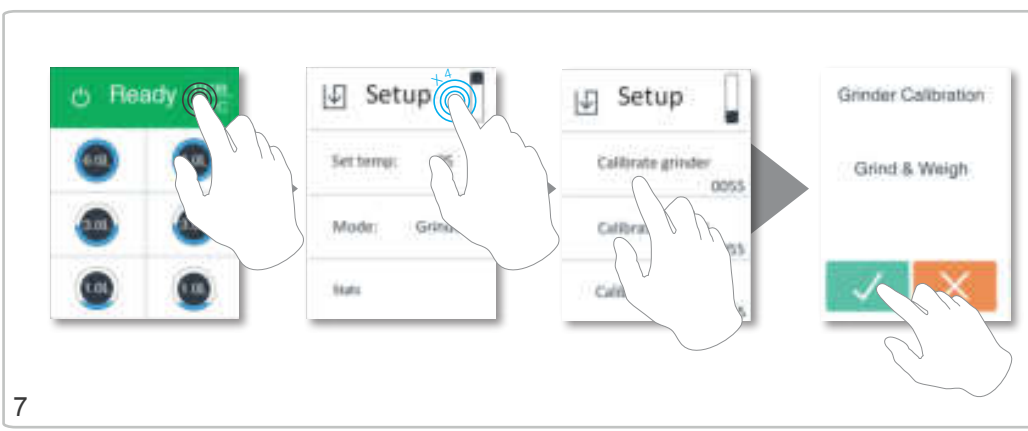
Ready
Setup
Set temp:
Mode:
Setup
Calibrate grinder
Grinder Calibration
Grind & Weigh
7

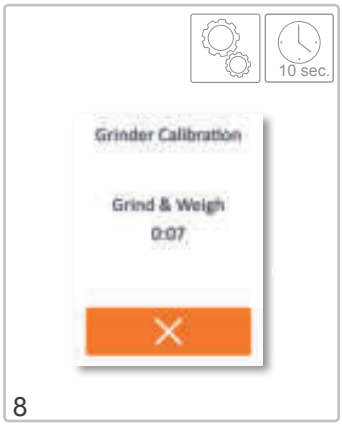
10 sec.
Grinder Calibration
Grind & Weigh
0:07
8


9


10

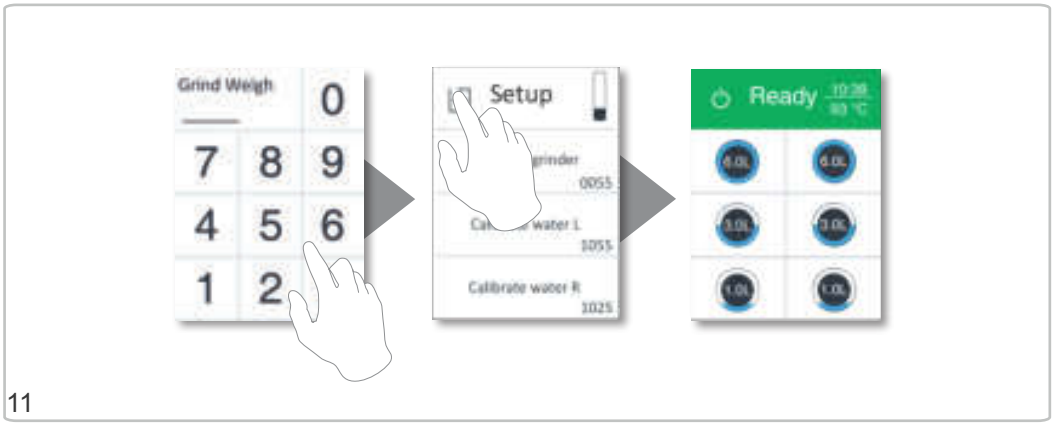
Grind Weigh
0
7
8
9
4
5
6
1
2
Setup
Calibrate water R
1025
Ready
11

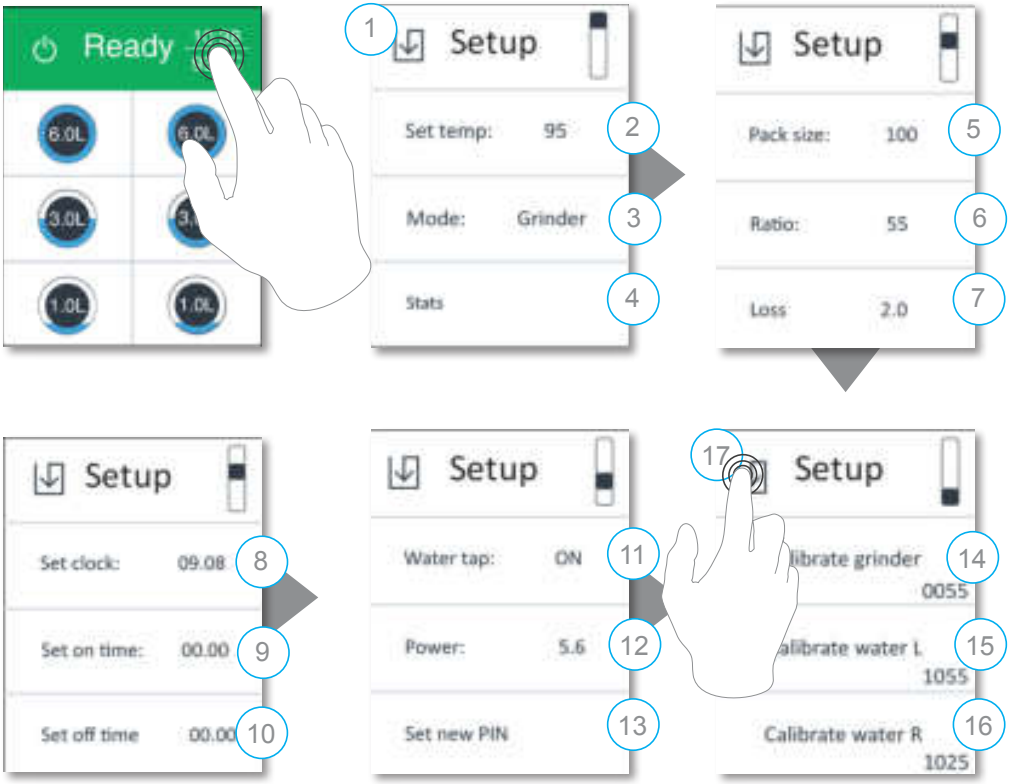
Ready
8.0L
6.0L
3.0L
1.0L
1
Setup
Set temp: 95
2
Mode: Grinder
3
Stats
4
Setup
Pack size: 100
5
Ratio: 55
6
Loss 2.0
7
Setup
Set clock: 09.08
8
Set on time: 00.00
9
Set off time 00.00
10
Setup
Water tap: ON
11
Power: 5.6
12
Set new PIN
13
17
Setup
ibrate grinder
14
0055
alibrate water L
15
1055
Calibrate water R
16
1025

1	Scroll though setup screens
2	Set brewing temperature
3	Set mode of operation (GRINDER / PACKS / MANUAL) **Manual mode** - This mode allows the user to set the desired amount of coffee needed. (See page X for setup). **Grinder mode** - This mode pairs brewer with the FCG6 grinder (See page X). **Packs mode** - This mode allows you to set custom pre-ground coffee pack sizes for use with the brewer (See page X for settings).
4	Shows the machine's estimated amount of usage of coffee, energy & water.
5	Set coffee pack size in grams (PACKS mode only)
6	Set coffee to water ratio. Grams per litre (GRINDER / PACKS modes only)
7	Set loss factor (how many grams of water is retained per gram of coffee)
8	Set real-time clock (24h)
9	Set machine turn-on time (24h)
10	Set machine turn-off time (24h) - Note setting on and off time for the same value disables the timer.
11	Turn the water tap on or off.
12	Set the power of the machine
13	Set new PIN number for the machine
14	Calibrate the grinder, this should be done every time grinder settings or coffee type is changed.
15	Calibrate the left side water output
16	Calibrate the right side water output
17	Exit to the main screen

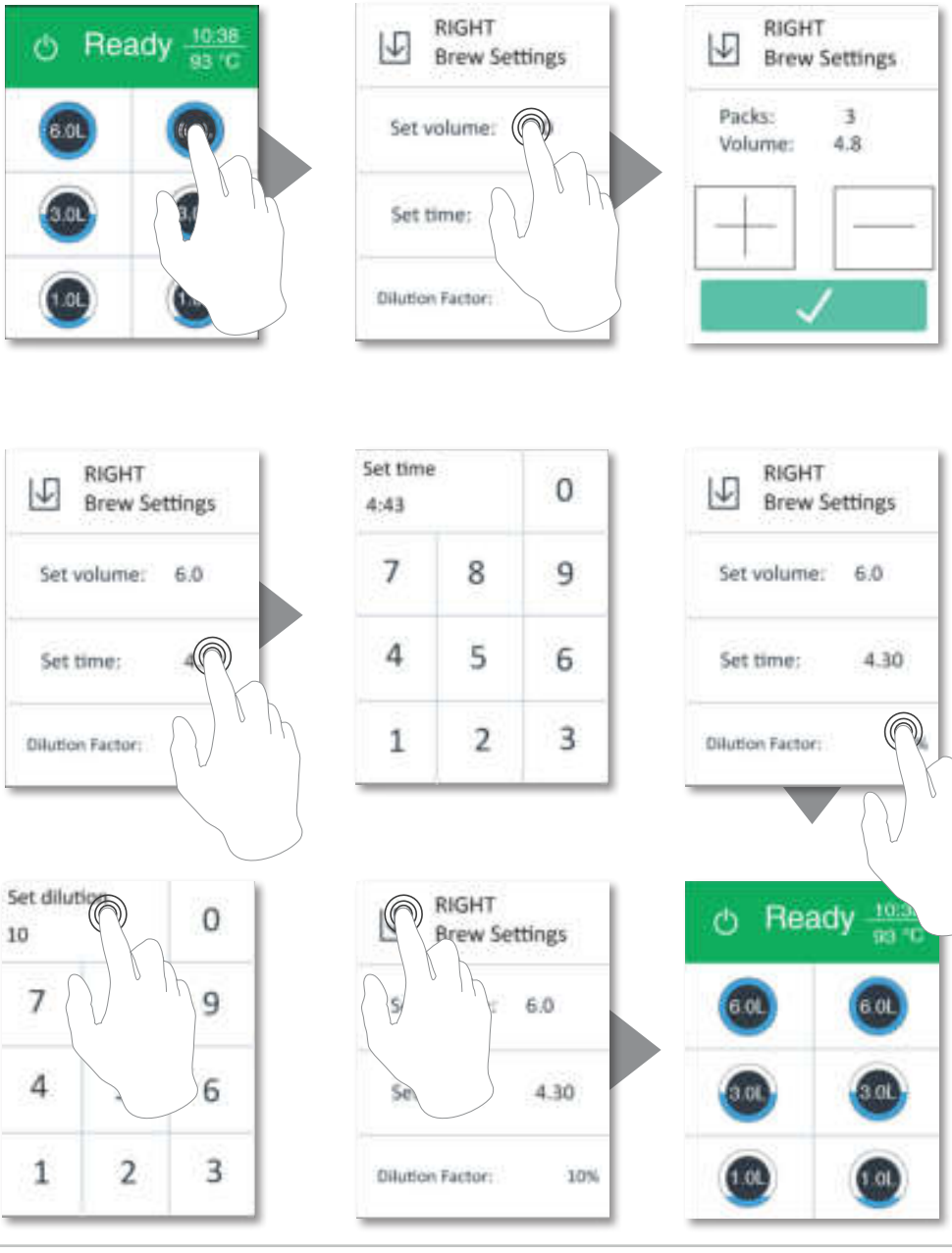
Ready
10:38
93 °C
6.0L
3.0L
1.0L
RIGHT
Brew Settings
Set volume:
Set time:
Dilution Factor:
Packs: 3
Volume: 4.8
RIGHT
Brew Settings
Set volume: 6.0
Set time:
Dilution Factor:
Set time
4:43
0
7
8
9
4
5
6
1
2
3
RIGHT
Brew Settings
Set volume: 6.0
Set time: 4.30
Dilution Factor:
Set dilution
10
0
7
9
4
6
1
2
3
RIGHT
Brew Settings
6.0
4.30
Dilution Factor: 10%
Ready
6.0L
6.0L
3.0L
3.0L
1.0L
1.0L

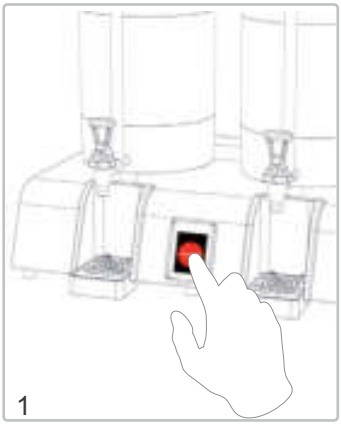
1

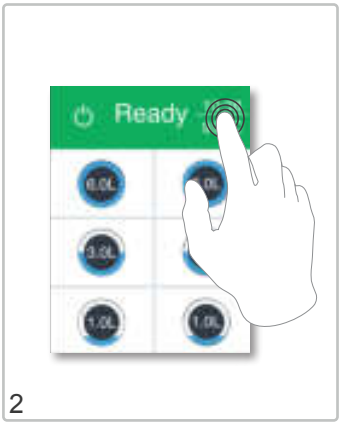
Ready
2

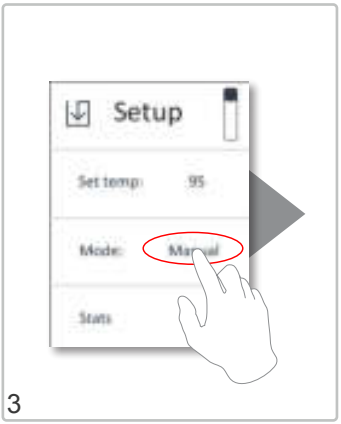
Setup
Set temp:
95
Mode:
Stats
3

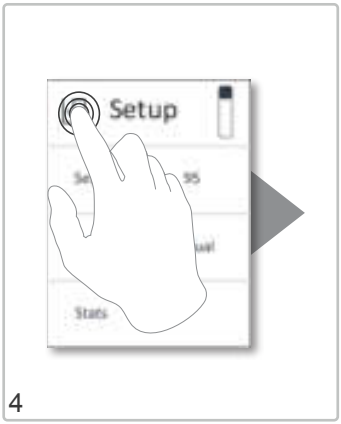
Setup
Stats
4

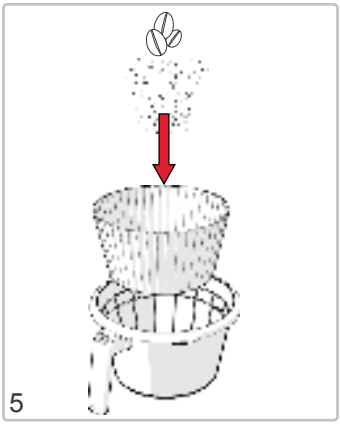
5


6

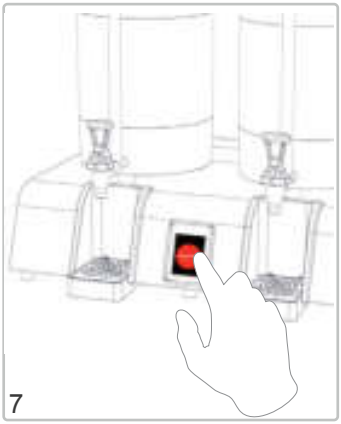
7


Ready
8

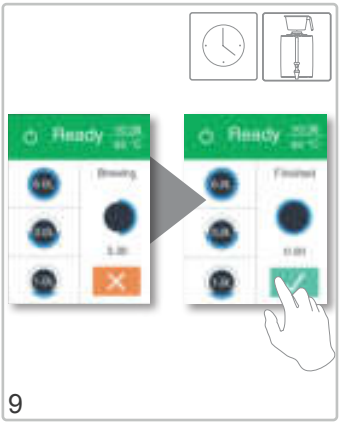
Ready
Ready
9



10

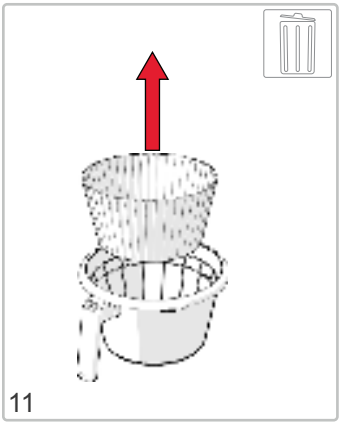

11



12

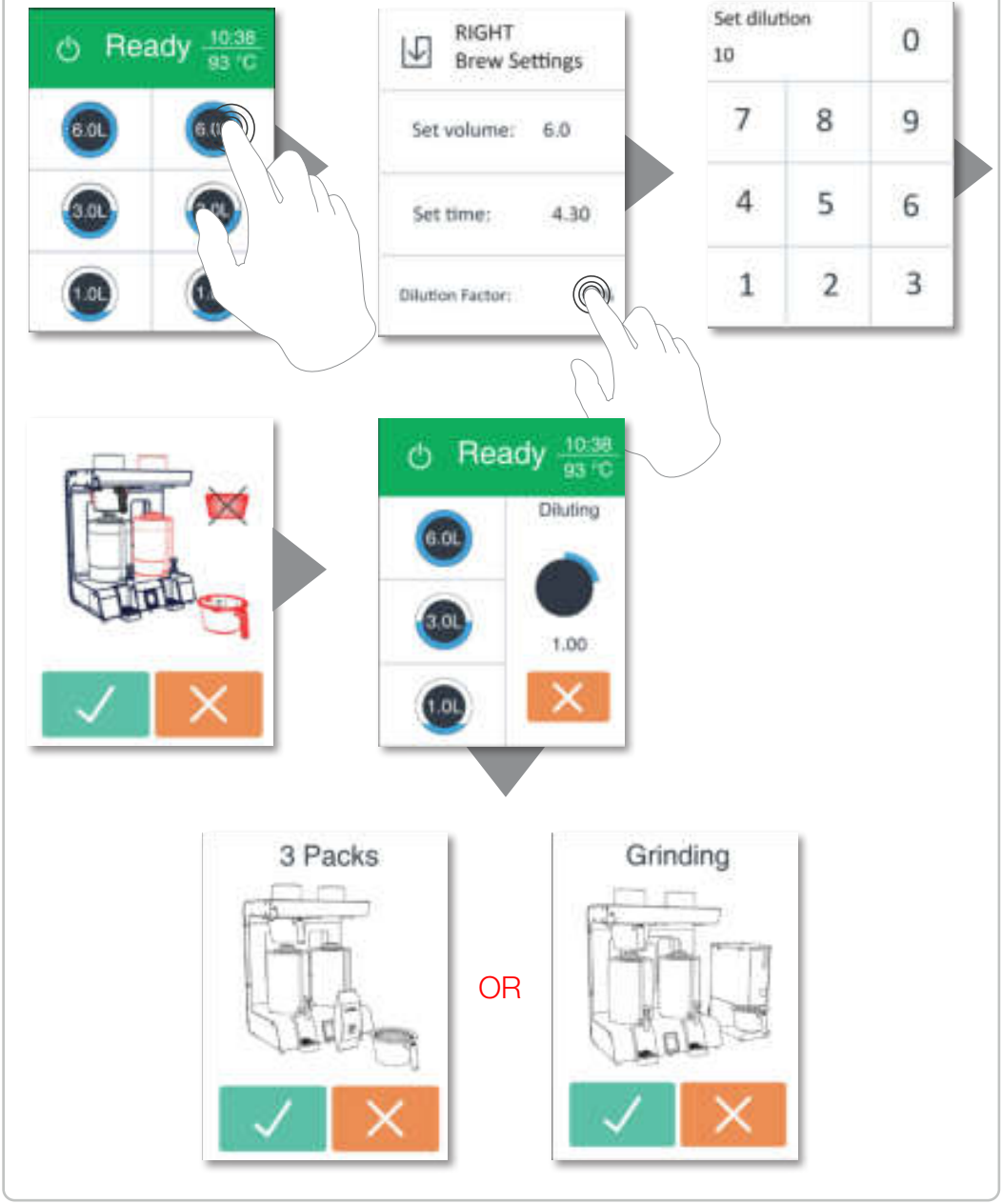
Ready
10:38
93 °C
6.0L
3.0L
1.0L
RIGHT
Brew Settings
Set volume: 6.0
Set time: 4.30
Dilution Factor:
Set dilution
10
0
7
8
9
4
5
6
1
2
3
Ready
10:38
93 °C
Diluting
6.0L
3.0L
1.0L
1.00
3 Packs
OR
Grinding

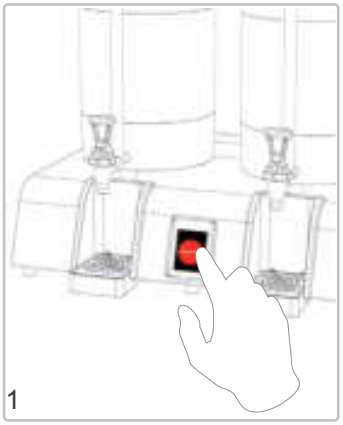
1

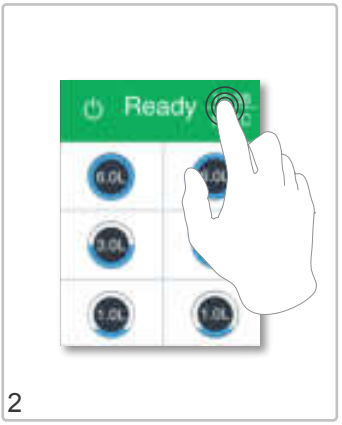
Ready
2


Setup
Set temp:
95
Mode:
Stats
3

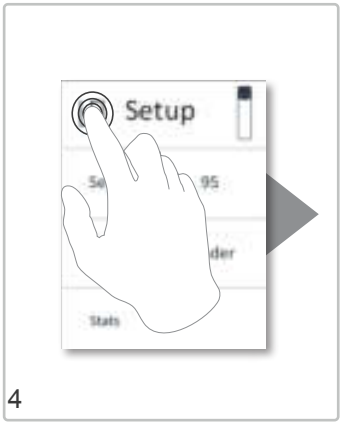
Setup
Stats
4

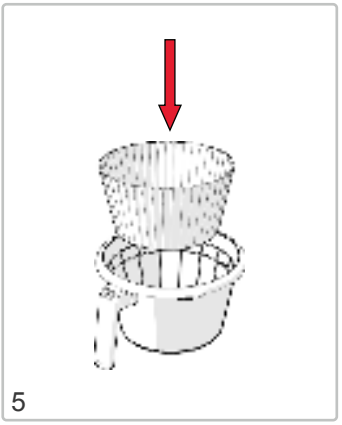
5


6

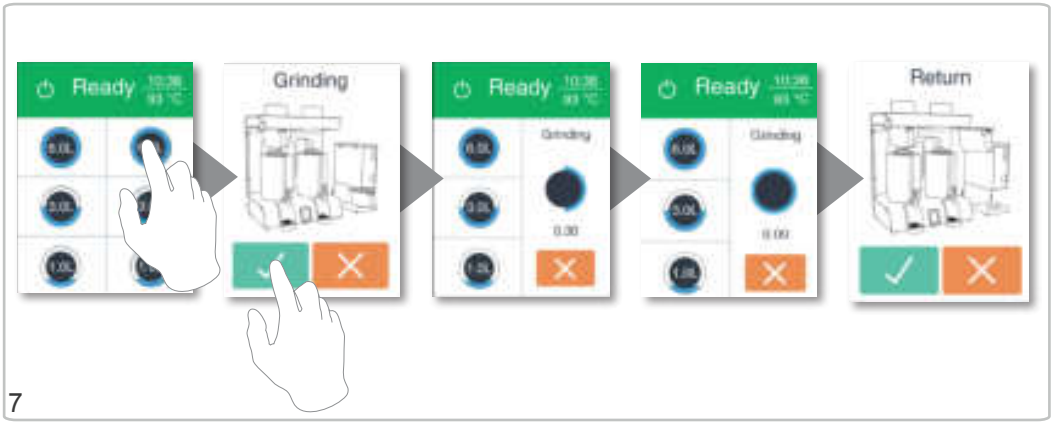
Ready
Grinding
Ready
Ready
Return
7


10

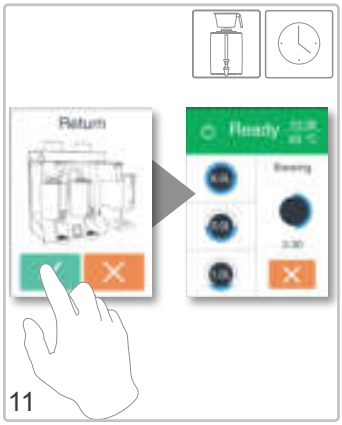

11

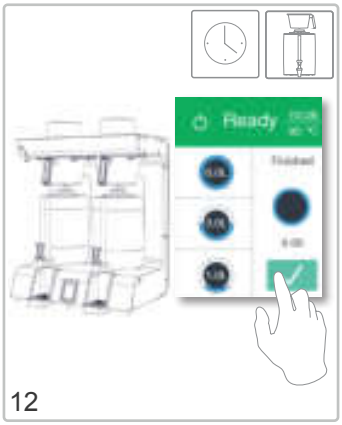

12


13

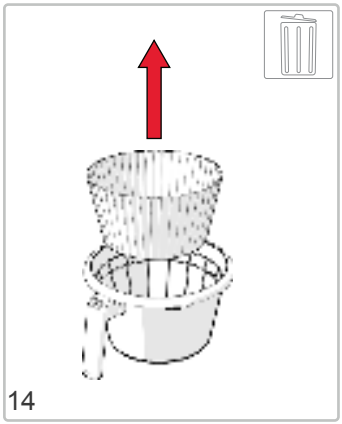
14


15

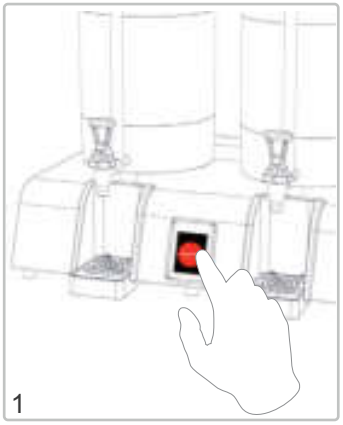
1

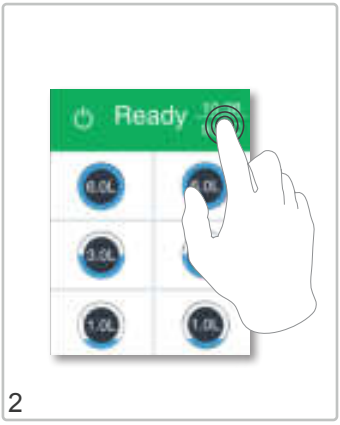
Ready
2

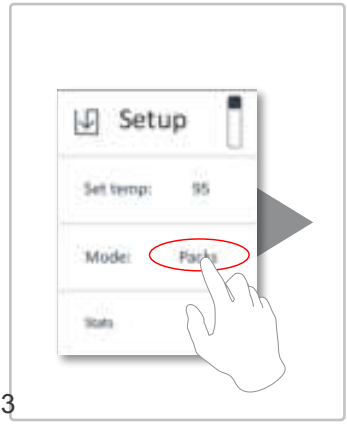
Setup
Set temp:
95
Mode:
Stats
3

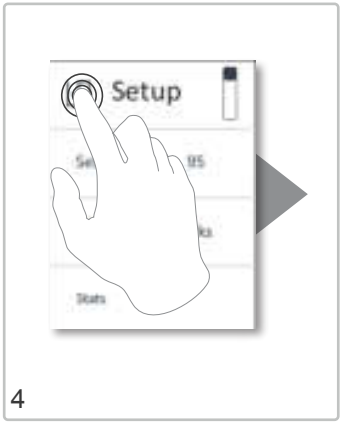
Setup
Stats
4


Ready
3 Packs
5


6


7

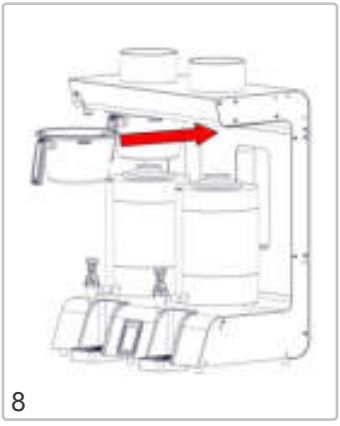
8

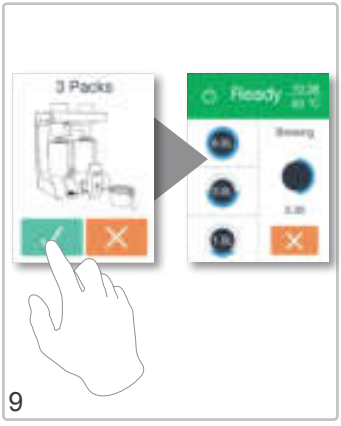
3 Packs
Ready
9



10

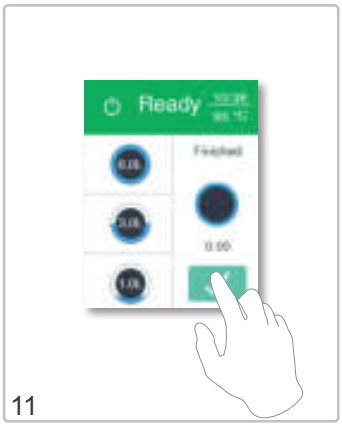

11



12

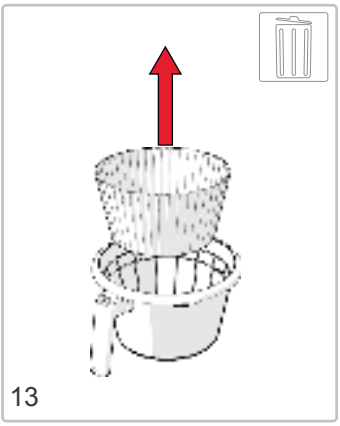

13



14

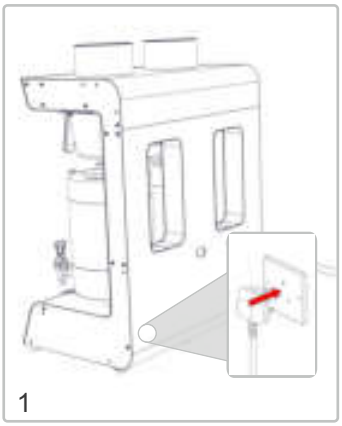
1


2

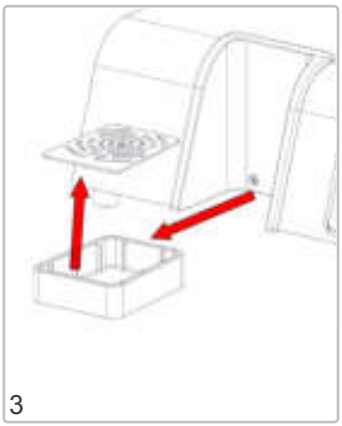
3


4

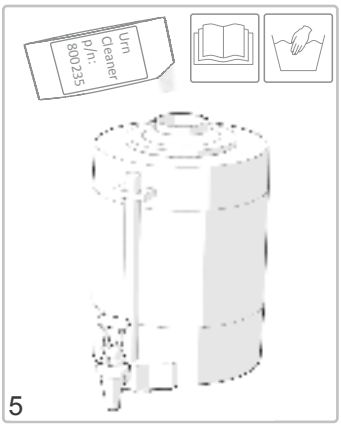

5

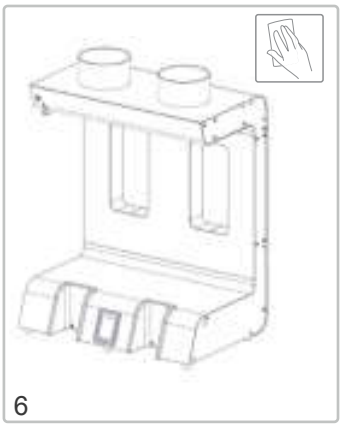
6


7