Vitamix



BARBOSS® ADVANCE®

The Ultimate Blender for Every Beverage Programme

Whether preparing blended drinks, simple syrups or purées for cocktail bases, the BarBoss Advance is an essential tool for adding or expanding a beverage programme.

Smart Product Design

- 6 optimised programmes and automatic shut-off means you can turn it on, walk away, and achieve consistent results
- Pulse control quickly refreshes drinks for efficiency
- Advance® container creates faster, smoother pouring and has a longer blade life resulting in time and cost savings along with improved customer experience
- Advanced motor is designed to resist overheating when blending extra-thick ingredients resulting in cooler operation and enhanced reliability during peak hours of operation





Create signature drinks

Product Specifications

BarBoss® Advance®

Item Number:	10197
Motor:	≈2 peak output horsepower motor
Electrical:	220 - 240 V, 50/60 Hz, 1000 - 1200 W
Pack:	Includes BarBoss Advance with 0.9 L high-impact, clear/stackable Advance® container, complete with Advance blade assembly and lid, and red base.
Net Weight:	5.5 kg (6.8 kg with box)
Dimensions:	44.9 x 20.3 x 22.9 cm (H x W x D)

Warranty: Please contact your authorised Vitamix distributor for warranty information.

10197

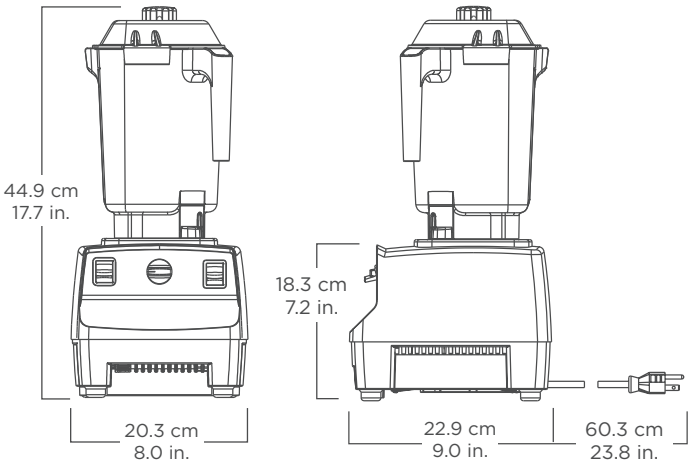

Where applicable:

Also Available

Additional containers, complete with blade assembly and lid.

Item Number:	15981:	Advance container 0.9 L
	15506:	standard container 1.4 L
	15640:	compact container 0.9 L

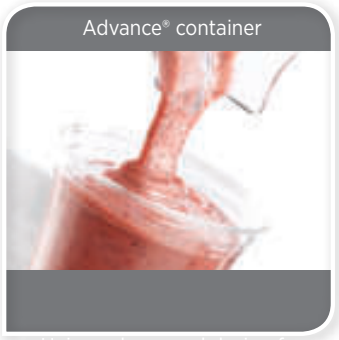

Unique shape and design for

Contact Information

U.S.A.:
Phone: 800.437.4654
Fax: 440.235.9670
Email: commercial@vitamix.com

Outside of U.S.A.:
Phone: +1.440.782.2450
Fax: +1.440.782.2220
Email: international@vitamix.com

vitamix.com

For more information, contact your local foodservice distributor.

©2015 Vita-Mix® Corporation 8/15 AUS/NZ