SPARE PARTS BOOK

OSCAR MOOD

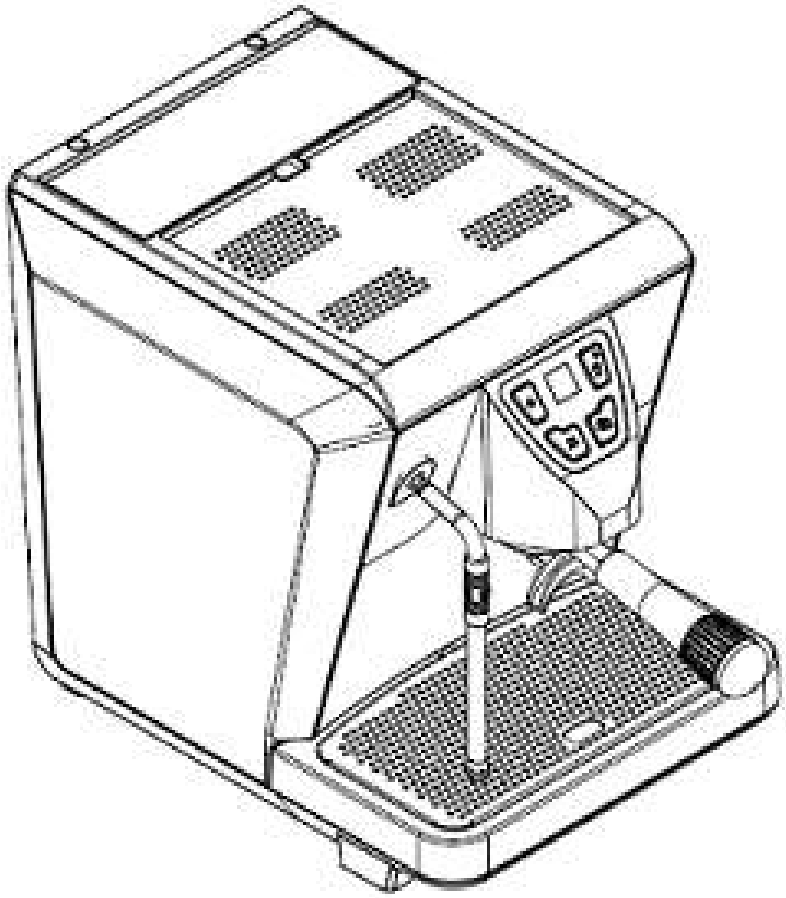

OSCAR MOOD

05/08/2022

nuova SIMONELLI®

The coffee machines you can trust.

nuova SIMONELLI®
The coffee machines you can trust.

T. 01 **CABINET PARTS**
COMPONENTI CARENA

T.02 **POURING GROUP PARTS**
COMP. GRUPPO EROGAZIONE

T.03 **FRAME PARTS**
COMPONENTI TELAIO

T.04 **HYDR. GROUP+STEAM WAND**
GRUPPO IDR.+LANCIA VAPORE

T.05 **PARTS SILENT PACK**
COMPONENTI SILENT PACK

T.06 **BOILER GROUP PARTS**
COMP. GRUPPO CALDAIA

T.07 **ELECTRIC AND ELECTRONIC PARTS**
COMP. ELETTRICI ED ELETTR.

» LEGEND :

THE CODES WRITTEN IN BOLD REFER TO THE COMPONENTS EMPLOYED CURRENTLY.

THE CODES USED BEFORE ARE WRITTEN IN CORSIVE WITH INDICATED, ON THE SIDE, THE END OF VALIDITY DATE.

EXAMPLE:
03001531 - 01/09/2007
03001531

COMPONENTI CARENA

CABINET PARTS

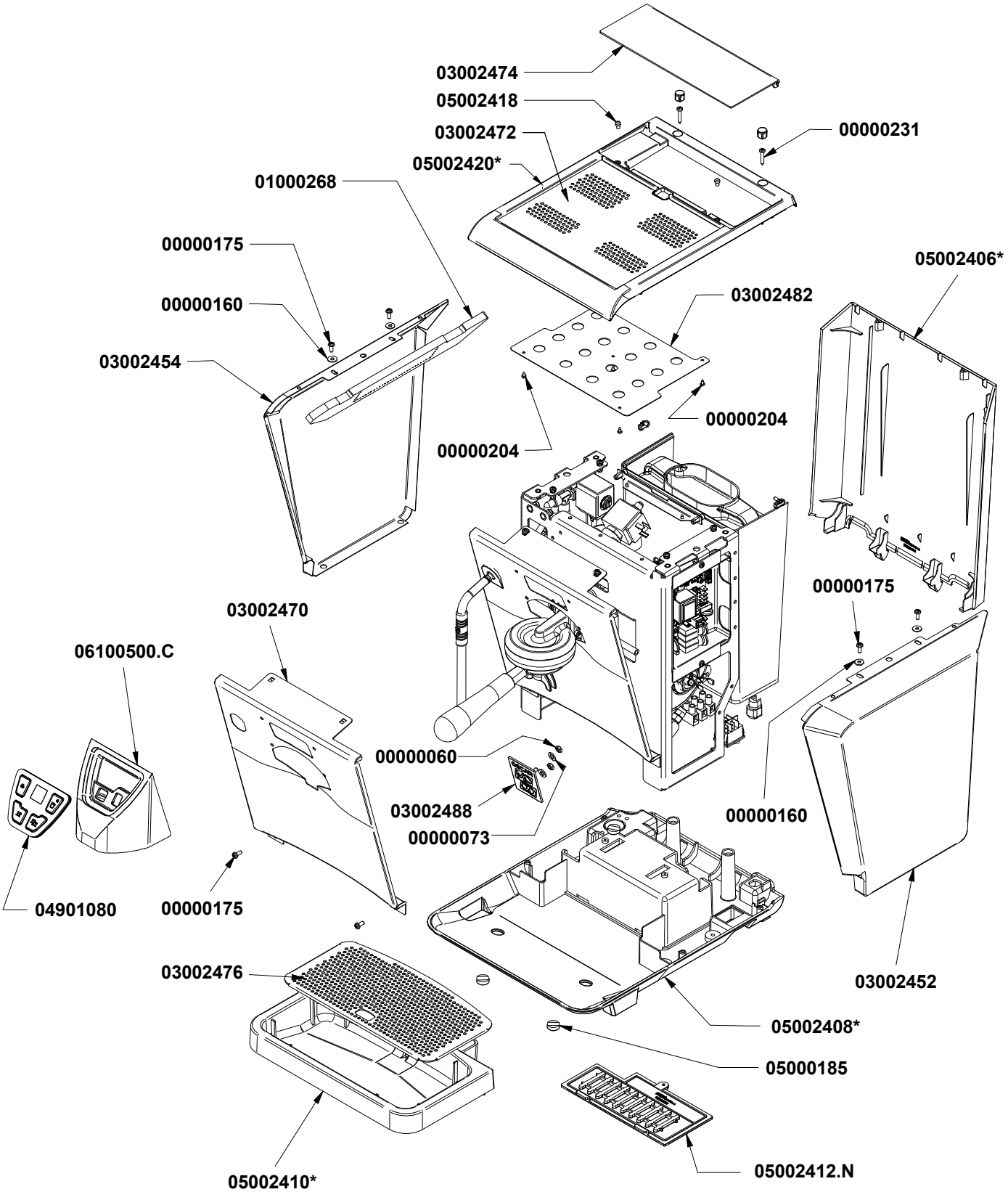

*Specify color
Specificare colore

T. 01

COMPONENTI CARENA

CABINET PARTS

COD.	DESCRIPTION	DESCRIZIONE	VAL.
00000060	GALV MEDIUM NUT AQ M3	DADO AQ M3 MEDIO ZINCATO	
00000073	S/S WASHER D.8x4x1 UNI6592	RONDELLA INOX 8x4x1 UNI6592	
00000160	S/S WASHER D4X12 UNI 6593	RONDELLA INOX D4x12x1 UNI 6593	
00000175	S/S CROSS HEAD CAP SCREW M4X10	VITE INOX M4x10 TC TCR	
00000204	S/S SELF-TAPPING SCREW 2,9x6,5 TC-TCR DIN7981	VITE AUTOF INOX 2,9x6,5 TC TCRDIN7981	
00000231	S/S SELF-TAPPING SCREW 3,9x19	VITE AUTOF INOX 3,9x19 TC /TCR	
01000268	FRAME INSULATION KIT OSCAR II	KIT ISOLANTE CARENA OSCAR II	
03002452	RIGHT SIDE PANEL OSCAR II	CARENA FIANCO DX OSCAR II	
03002454	LEFT SIDE PANEL OSCAR II	CARENA FIANCO SX OSCAR II	
03002470	FRONT PANEL OSCAR MOOD	CARENA FRONTALE OSCAR MOOD	
03002472	CUP HOLDER PLATE OSCAR MOOD	PIATTO PORTATAZZE OSCAR MOOD	
03002474	TANK COVER OSCAR MOOD	COPERCHIO TANICA OSCAR MOOD	
03002476	WORKTOP SURFACE OSCAR MOOD	RETINA PIANO LAV. OSCAR MOOD	
03002482	PROTECTION CUPWARMER OSCAR MOOD	PROTEZ. P.SCALDATAZZE OSCAR MOOD	
03002488	FRONT LOGO OSCAR MOOD	LOGO FRONTALE OSCAR MOOD	
04901080	DISPENSING BOARD OSCAR MOOD	SCHEDA EROGAZIONE OSCAR MOOD	
05000185	FOOT OSCAR	PIEDINO OSCAR	
05002406.NOV	BACKSIDE FRAME MOOD PAINTED MATT BLACK	CARENA RETRO OSCAR MOOD NERO OPACO VERNIC.	
05002406.PSV	BACKSIDE FRAME MOOD PAINTED PISTACHIO	CARENA RETRO OSCAR MOOD PISTACCHIO VERNIC.	
05002406.RV	BACKSIDE FRAME MOOD PAINTED RED	CARENA RETRO OSCAR MOOD ROSSO VERNIC.	
05002406.TRV	BACKSIDE FRAME MOOD PAINTED DOVE GREY	CARENA RETRO OSCAR MOOD TORTORA VERNIC.	
05002408.NOV	INFERIOR FRAME MOOD PAINTED MATT BLACK	CARENA INFERIORE OSCAR MOOD NERO OPACO VERNIC	
05002408.PSV	INFERIOR FRAME MOOD PAINTED PISTACHIO	CARENA INFERIORE OSCAR MOOD PISTACCHIO VERNIC.	
05002408.RV	INFERIOR FRAME MOOD PAINTED RED	CARENA INFERIORE OSCAR MOOD ROSSO VERNIC.	
05002408.TRV	INFERIOR FRAME MOOD DOVE GREY	CARENA INFERIORE OSCAR MOOD TORTORA VERNIC.	
05002410.NOV	DRIP TRAY MOOD PAINTED MATT BLACK	VASCHETTA RACC.ACQUA OSCAR MOOD NERO OPACO V	
05002410.PSV	DRIP TRAY MOOD PAINTED PISTACHIO	VASCHETTA RACC.ACQUA OSCAR MOOD PISTACCHIO VE	
05002410.RV	DRIP TRAY MOOD PAINTED RED	VASCHETTA RACC.ACQUA OSCAR MOOD ROSSO VERNIC	
05002410.TRV	DRIP TRAY MOOD PAINTED DOVE GREY	VASCHETTA RACC.ACQUA OSCAR MOOD TORTORA VERN	
05002412.N	BASE CLOSURE OSCAR II BLACK	CHIUSURA FONDO OSCAR II NERO	
05002420.NOV	SUPERIOR FRAME MOOD MATT BLACK	CARENA SUPERIORE OSCAR MOOD NERO OPACO VERN.	
05002420.PSV	SUPERIOR FRAME MOOD PAINTED GUACAMOLE	CARENA SUPERIORE OSCAR MOOD PISTACCHIO VERN.	
05002420.RV	SUPERIOR FRAME MOOD PAINTED RED	CARENA SUPERIORE OSCAR MOOD ROSSO VERN.	
05002420.TRV	SUPERIOR FRAME MOOD PAINTED TAUPE	CARENA SUPERIORE OSCAR MOOD TORTORA VERN.	
05002422.NOV	PANEL SCREW CAP PAINTED MATT BLACK	TAPPO VITE CARENA SUP. OSCAR MOOD NERO OPACO V	
05002422.PSV	PANEL SCREW CAP PAINTED GUACAMOLE	TAPPO VITE CARENA SUP. OSCAR MOOD PISTACCHIO VE	
05002422.RV	PANEL SCREW CAP PAINTED RED	TAPPO VITE CARENA SUP. OSCAR MOOD ROSSO VERN.	
05002422.TRV	PANEL SCREW CAP PAINTED TAUPE	TAPPO VITE CARENA SUP. OSCAR MOOD TORTORA VERN	
06100500.C	CHROME OSCAR MOOD GROUP COVER	COPRIGRUPPO OSCAR MOOD CROMATO	

COMP. GRUPPO EROGAZIONE

POURING GROUP PARTS

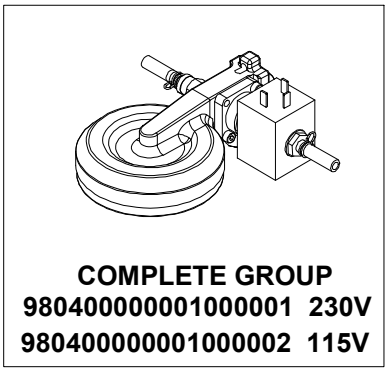

COMPLETE GROUP
980400000001000001 230V
980400000001000002 115V

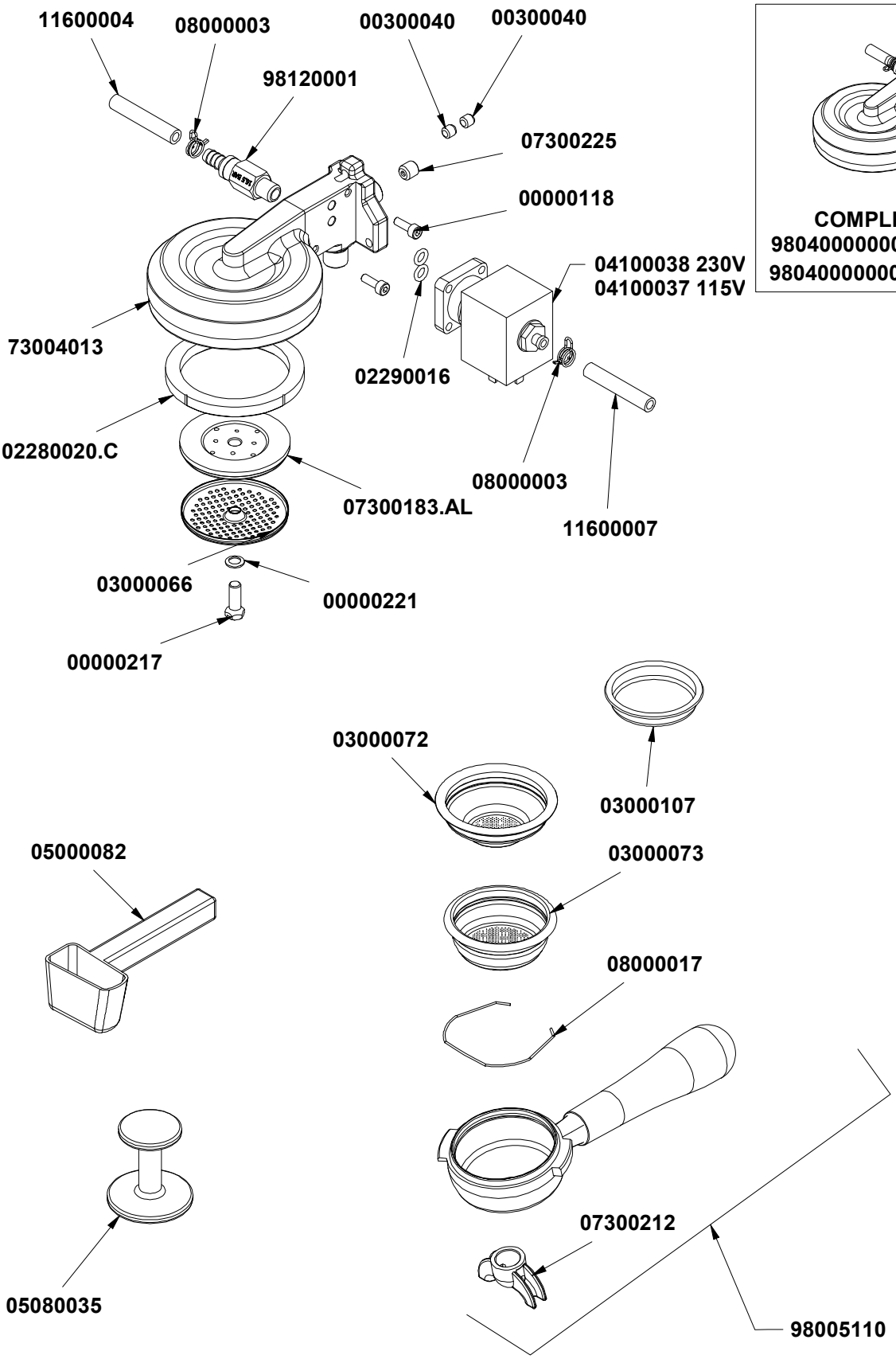

COMP. GRUPPO EROGAZIONE

POURING GROUP PARTS

COD.	DESCRIPTION	DESCRIZIONE	VAL.
00000118	S/SHEX SOCKET CAP SCREW M4x12 5931	VITE INOX M4x12 TCEI 5931	
00000217	S/S SCREW TE CH9 + TC LT=20 FOR SHOWER	VITE INOX M6 LT=20 TE CH9 + TCx DOCCIA	
R00000217	KIT-S/S SCREW TE CH9 + TC LT=20 FOR SHOWER - 10Pc:	KIT-VITE INOX M6 LT=20 + TCx DOCCIA - 10Pz	
00000221	S/S SECURITY FLAT WASHER INOX M6 CONICAL	RONDELLA DI SICUREZZA INOX M6 SCHNORR CONICA	
00300040	S/S FH GRUB SCREW M6x6	GRANO INOX M6x6 PUNTA PIANA	
02280020.C	GROUP GASKET 72X57X6.8 TYPE C 72/75 ShA	GUARNIZ. SOTTOCOPPA 72X57X6.8 TIPO C 72/75 ShA	
R02280020.C	KIT-GROUP GASKET 72X57X6.8 ShA - 15Pcs	KIT-GUARNIZ. SOTTOCOPPA 72X57X6.8 TIPO C - 15Pz	
02290016	GASKET O RING D9,5 R5 SIL RED	GUARN. OR D 9,5 R5 SILICONE R.	
R02290016	KIT-GASKET O RING D9,5 SIL RED - 30Pcs	KIT-GUARN. OR D 9,5 SILICONE R. - 30Pz	
03000066	S/S SHOWER 56X5,5X6 WELDED	DOCCIA INOX 56x5,5x 6 SALDATA Aisi304	
R03000066	KIT-S/S SHOWER 56X5,5X6 WELDED - 5Pcs	KIT-DOCCIA INOX 56x5,5x 6 SALDATA Aisi304 - 5Pz	
03000072	FILTER ONE COFFEE HIGH 7gr	FILTRO 1 CAFFE' ALTO 7gr.	
R03000072	KIT-FILTER ONE COFFEE HIGH 7gr - 3Pcs	KIT-FILTRO 1 CAFFE' ALTO 7gr. - 3Pz	
03000073	FILTER TWO COFFEE HIGH 14gr	FILTRO 2 CAFFE' ALTO 14gr.	
R03000073	KIT-FILTER TWO COFFEE HIGH 14gr - 3Pcs	KIT-FILTRO 2 CAFFE' ALTO 14gr. - 3Pz	
03000107	BLIND FILTER	FILTRO CIECO	
R03000107	KIT-BLIND FILTER - 8Pcs	KIT-FILTRO CIECO - 8Pz	
04100037	3WAY SOLENOID CONNECTOR HOSE SUPPORT WASTE	E.V. NC 3VIE BASETTA SCAR. PORTAG.115V 60Hz VITONF	
R04100037	KIT-3WAY SOLENOID CONNECTOR HOSE SUPPORT WAS	KIT -E.V. NC 3VIE BASETTA SCAR. PORTAG.115V 60HZVITC	
04100038	3WAY SOLENOID CONNECTOR HOSE SUPPORT WASTE	E.V. NC 3VIE BASETTA SCAR. PORTAG.230V 50/60HzVITON	
R04100038	KIT-3WAY SOLENOID CONNECTOR HOSE SUPPORT WAS	KIT -E.V. NC 3VIE BASETTA SCAR. PORTAG.230V50/60HZ V	
05000082	MEASUREMENT 1 DOSE GROUND COFFEE	MISURINO CAFFE' MACINATO 1DOSE	
05080035	COFFEE TAMPER ABS BLACK	PRESSA CAFFE' ABS NERO	
07300183.AL	GROUP DIFFUSER h=3 ALLUMINUM	PADIGLIONE GRUPPO h=3 ALLUMINIO	
07300212	2WAY SMALL NOZZLE	BECCO DUE VIE PICCOLO	
07300225	GIGLEUR M8X8 F.3	GIGLER M8x8 F.3	
08000003	HOSE CLAMP D9,1	FASCETTA STRINGITUBO D9.1	
08000017	S/S FILTER LOCKING SPRING	MOLLA BLOCCA FILTRO ACC.INOX	
R08000017	KIT-S/S FILTER LOCKING SPRING - 15Pcs	KIT-MOLLA BLOCCA FILTRO ACC.INOX - 15Pz	
11600004	SILICONE PIPE 5x9 60Sh PEROX WHITE SEMITRASPAREN	TUBO SILICONE 5x9 60Sh PEROX BIANCOSEMITRASPAREI	
11600007	RUBBER HOSE TT/NBR 8x12	TUBO GOMMA TT/NBR 6x10	
73004013	CHROME DISPENSING GROUP OT-58 OSCAR/MUSICA	GRUPPO EROGAZ. CROMATO OT-58 OSCAR/MUSICA	
98005110	INCLINED FILTER-HOLDER BODY N.S. + WOOD KNOB	CORPO PORTAFILTRO N.S. INCLIN.+ MANOPOLA LEGNO	
980400000001000001	DISPENSING GROUP SET OSCAR II 230V	ASS. GR. EROG. OSCAR II 230V	
980400000001000002	DISPENSING GROUP SET OSCAR II 115V	ASS. GR. EROG. OSCAR II 115V	
98120001	NEPLAX VITON 16,5 BAR VALVE 1/8 HOSE CLAMP	VALVOLA NEPLAX VITON 16,5 BAR 1/8 - PORTAGOMMA	
R98120001	KIT-NEPLAX VITON 16,5 BAR VALVE 1/8 HOSE CLAMP - 2F	KIT-VALVOLA NEPLAX VITON 16,5 BAR 1/8 - PORTAGOMM/	

COMPONENTI TELAIO

FRAME PARTS

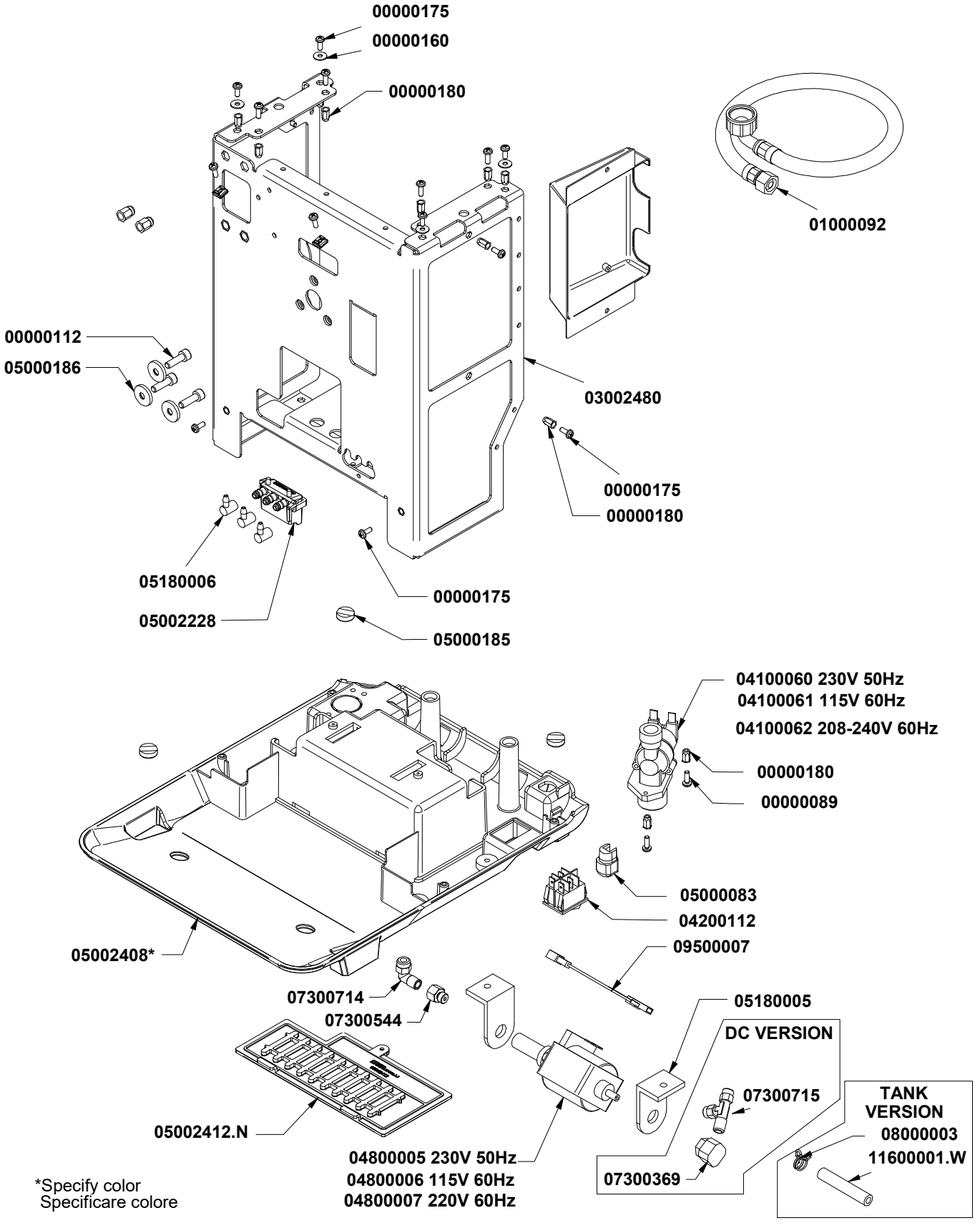

*Specify color
Specificare colore

COMPONENTI TELAIO

FRAME PARTS

COD.	DESCRIPTION	DESCRIZIONE	VAL.
00000089	S/S CROSSHEAD CAP SCREW M4x12 DIN7985	VITE INOX M4x12 TC TCR DIN7985	
00000112	S/S SOCKET SCREW M6x20 UNI 5931	VITE INOX M6x20 TCEI UNI 5931	
00000160	S/S WASHER D4X12 UNI 6593	RONDELLA INOX D4x12x1 UNI 6593	
00000175	S/S CROSS HEAD CAP SCREW M4X10	VITE INOX M4x10 TC TCR	
00000180	HEX RIVET NUT M4	RIVETTO M4 ESAGONALE ER	
01000092	3/8F-3/4F90D WATER CHARGE PIPE 1,5mt + FILTER	TUBO CARICO ACQUA 1,5 mt EPDM 3/8F OTT - 3/4F 9GHIEF	
R01000092	KIT-3/8F-3/4F90D WATER CHARGE PIPE 1,5mt+ FILTER-1F	KIT -TUBO CARICO ACQUA 1,5 MT EPDM 3/8F OTT3/4F 9 GI	
03002480	FRAME OSCAR MOOD	TELAIO MACCHINA OSCAR MOOD	
04100060	2WAY SOLENOID 3/4-JG 6 STRAIGHT+FILTR F.2,5 230V50/	E.V. NC 2VIE 3/4-JG 6 DIRITTA REGOL+FILTR F.2,5230V 50/(	
R04100060	KIT-2WAY SOLENOID 3/4-JG 6 STRAIGHT+FILTR F.2,5 - 1F	KIT-E.V. NC 2VIE 3/4-JG 6 DIRITTA REGOL+FILTR F.2,- 1Pz	
04100061	2WAY SOLENOID 3/4-JG 6 STRAIGHT+FILTR F.2,5 115V60/	E.V. NC 2VIE 3/4-JG 6 DIRITTA REGOL+FILTR F.2,5115V 60H	
04100062	2WAY SOLENOID 3/4-JG6 STRAIGHT ULREGOL+FILTR F.2	E.V. NC 2VIE 3/4-JG6 DIRIT. ULREGOL+FILTR F.2,5208/240V	
04200112	RED LIGHT 0/1 BIPOLAR SWITCH UL 16A	INTERRUTTORE BIPOLARE LUMINOSO ROSSO 0/1RETTAN	
04800005	VIBRATION PUMP V230 50Hz 48W	POMPA ELETTROMECC. 230V 50Hz 48W	
R04800005	KIT-VIBRATION PUMP V230 50Hz 48W - 1Pcs	KIT-POMPA ELETTROMECC. 230V 50Hz 48W - 1Pz	
04800006	VIBRATION PUMP 115V 60Hz 1W	POMPA ELETTROMECC. 120V 60Hz 41W	
04800007	ELECTROMECHANICAL PUMP 220V 60Hz 64W	POMPA ELETTROMECCANICA 220V 60Hz 64W	
R04800007	KIT-ELECTROMECHANICAL PUMP 220V 60Hz 64W-1Pcs	KIT -POMPA ELETTROMECCANICA 220V 60HZ 64W-1PZ	
05000083	CABLE LOCK SR 11-2 BLACK	BLOCCACAVO SR 11-2 NERO	
05000185	FOOT OSCAR	PIEDINO OSCAR	
05000186	H3 D6,3/20 NYLON INSERT OSCAR GROUP BLACK	INSERTO NYLON GR. OSCAR h3 D.6,3/20 NERO	
05002228	DISCHARGE MANIFOLD DISPENSING GROUP	COLLETTORE SCARICO GRUPPI EROG	
05002408.NOV	INFERIOR FRAME MOOD PAINTED MATT BLACK	CARENA INFERIORE OSCAR MOOD NERO OPACO VERNIC	
05002408.PSV	INFERIOR FRAME MOOD PAINTED PISTACHIO	CARENA INFERIORE OSCAR MOOD PISTACCHIO VERNIC.	
05002408.RV	INFERIOR FRAME MOOD PAINTED RED	CARENA INFERIORE OSCAR MOOD ROSSO VERNIC.	
05002408.TRV	INFERIOR FRAME MOOD DOVE GREY	CARENA INFERIORE OSCAR MOOD TORTORA VERNIC.	
05002412.N	BASE CLOSURE OSCAR II BLACK	CHIUSURA FONDO OSCAR II NERO	
05180005	L-SHAPED PUMP BRACKET	SUPPORTO POMPA AD L	
05180006	SMALL PIPE 90° FOR PUMP	PIPETTA PORTAGOMMA 90° x POMPA	
07300369	DIRECT ATTACHMENT FITTING FOR ELECTROMECHANIC	RACCORDO ATTACCO DIRETTO PER POMPAELETTROME(	
07300544	MF 1/8" ES 14 FOR S/S FILTER D8	PROLUNGA MF 1/8" ES 14 x FILTRO INOX D8	
07300714	L FITTING 1/8 M - FITTINGS.6	RACCORDO L 1/8 M - CALZAM.6	
R07300714	KIT-L FITTING 1/8 M - FITTINGS.6 - 6Pcs	KIT-RACCORDO L 1/8 M - CALZAM.6 - 6Pz	
07300715	T FITTING 1/8 M -FITTINGS.6 -FITTINGS.6	RACCORDO T 1/8 M -CALZAM.6 - CALZAM.6	
08000003	HOSE CLAMP D9,1	FASCETTA STRINGITUBO D9.1	
09500007	2MMT 100°C THERMAL PROTECTION	TERMOPROTETTORE 2MMT 100°C	
11600001.W	WHITE SILICONE PIPE 4x7,5 60Sh(1mt=41gr) PLATINICO S	TUBO SILICONE BIANCO4x7,5 60Sh(1mt=41gr) PLATINICO S	

GRUPPO IDR.+LANCIA VAPORE

HYDR. GROUP+STEAM WAND

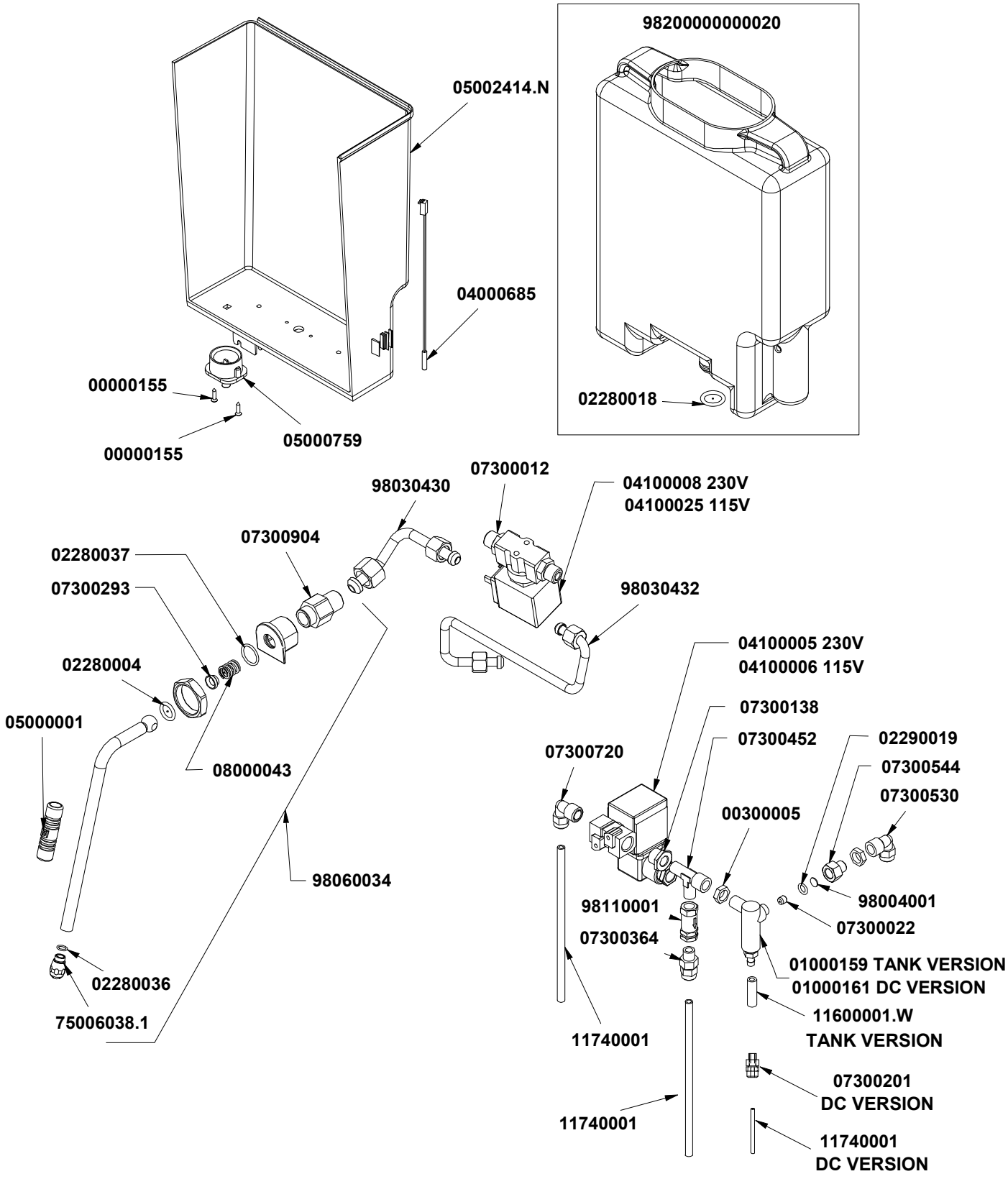

GRUPPO IDR.+LANCIA VAPORE

HYDR. GROUP+STEAM WAND

COD.	DESCRIPTION	DESCRIZIONE	VAL.
05002414.N	TANK SUPPORT OSCAR II BLACK	SOSTEGNO TANICA OSCAR II NERO	
07300201	CYLIND. FITTING 6/4 M6 340/M	RACCORDO CIL. 6/4 M6 340/M	
08000043	SPRING FOR ARTICULATED WAND D.1.6 D.11.9x16.2 4CO	MOLLA PER LANCIA SNODATA FILO D.1.6 D.11.9x16.2 4SPI	
00000155	S/S SCREW 3x12 TSPTCR DIN 7505 A	VITE INOX TRUCIOL. 3x12 TSPTCR18-8 DIN 7505 A	
00300005	BRASS NUT 1/8 GAS D4 ADD 22.07.96 CH13	DADO OT 1/8 GAS AGG.22.07.96 SPESS.4 CH13	
01000159	R ADJ BY-PASS FOR MOTOR PUMP WTH OR/SPRING E L	BY-PASS DX REG. x ELETTROPOMPA CON OR / MOLLA "E"	
R01000159	KIT-BYPASS FOR MOTOR PUMP WTH OR/SPRING - 1Pcs	KIT-BY-PASS DX REG. x ELETTROPOMPA CON OR / MOLLA	
01000161	ADJUSTABLE RIGHT BY-PASS FOR ENGINE PUMP DIREC	BY-PASS DESTRO REGOLABILE PER ELETTROPOMPA ATT	
02280004	GASKET O RING 115 D17 EP 856 x SWIVEL STEAM PIPE	GUARN. OR 115 D.17 EP856 SNODO LANCIA	
R02280004	KIT-GASKET O RING 115 D17 EP 856 x STEAM PIPE - 55Pc	KIT-GUARN. OR 115 D.17 EP856 SNODO LANCIA - 55Pz	
02280018	RED SILICON GASKET O RING Sh70	GUARN. OR R11 D19 SILICONE ROSSO Sh70	
02280036	O RING FOR STEAM WAND NOZZLE D6x1.2 EPDM70 500 I	GUARN. OR x BECCO LANCIA VAP. DI 6x1.2 EPDM70(CONF	
R02280036	KIT-O RING FOR STEAM WAND NOZZLE D6x1.2 EPDM - 6	KIT-GUARN. OR x BECCO LANCIA VAP. D. 6x1.2 EPDM- 65P	
02280037	GASKET O RING JOINT LOCK 16x2 NBR70	GUARN. OR CHIUSURA SNODO 16x2 NBR70	
R02280037	KIT-GASKET O RING JOINT LOCK 16x2 NBR - 45Pcs	KIT-GUARN. OR CHIUSURA SNODO 16x2 NBR - 45Pz	
02290019	GASKET O-RING LOWER PISTON R6 DF801 VITON	GUARNIZIONE OR R6 DF801 VITON	
R02290019	KIT-GASKET O-RING LOWER PISTON DF801 VITON - 20Pc	KIT-GUARNIZIONE OR R6 DF801 VITON - 20Pz	
04000685	TANK REED SENSOR 4x19mm OSCAR II	SENSORE REED 4X19 x OSCAR II TANICA (FRAGILE-MANE	
R04000685	KIT-TANK REED SENSOR 4x19mm - 1Pcs	KIT-SENSORE REED 4X19 TANICA - 1Pz	
04100005	2WAY SOLENOID 1/4-1/4 220V 50/60Hz F2 CE TH 1xM4	E.V. NC 2VIE 1/4-1/4 220-230V 50/60Hz EPDM F2 CEPIEDINC	
R04100005	KIT-2WAY SOLENOID 1/4-1/4 220V 50/60Hz F2 - 1Pcs	KIT-E.V. NC 2VIE 1/4-1/4 220-230V 50/60Hz EPDM- 1Pz	
04100006	2WAY SOLENOID 1/4-1/4 110-120V 60Hz F2 UL TH 1xM4	E.V. NC 2VIE 1/4-1/4 110-120V 60Hz EPDM F2 ULPIEDINO FI	
04100008	3WAY SOLENOID 1/4-1/4 1/8 240V50/60hz F3 UL TH2xM5	E.V. NC 3VIE 1/4-1/4 SCAR. 1/8 220V 50Hz-240V 60HzRUBY	
R04100008	KIT-3WAY SOLENOID 1/4-1/4 1/8 240V50/60hz F3UL TH2xM	KIT -E.V. NC 3VIE 1/4-1/4 SCAR. 1/8220V 50HZ-240V60HZ RU	
04100025	3WAY SOLENOID 1/4-1/4 DIS 1/8110-120V50/60Hz F3 TH 2	E.V. NC 3VIE 1/4-1/4 SCAR. 1/8110-120V 50/60HzRUBY F3 U	
05000001	RUBBER PROTECTION FOR STEAMWAND D10	GOMMINO PROTEZIONE LANCIA D.10	
R05000001	KIT-RUBBER PROTECTION FOR STEAMWAND D10 - 10Pc	KIT-GOMMINO PROTEZIONE LANCIA D.10 - 10Pz	
05000759	WATER CONTAINER COLLECTOR 5LT MICROBAR	COLLETTORE CONTENITORE ACQUA 5LT MICROBAR	
07300012	FITTING 1/4 1/4M-1/4M Aisi316	RACCORDO 1/4M-1/4M Aisi316	
07300022	DISPENSING GIGLEUR M 6x6 F0.8 ADD. 28.05.93	GIGLER EROGAZIONE M 6x6 F.0.8	
07300138	FITTING ADAPTER 1/4M-1/8F ES.17 AGG.29.05.96 OT-58	RIDUZIONE 1/4"M - 1/8"F ES.17 AGG. 29.05.96 OT-58	
07300293	ARTICULATED BUSHING AG.25.06.96 OT-57	BUSSOLA SNODO AG.25.06.96 OT-57	
R07300293	KIT-ARTICULATED BUSHING - 15Pcs	KIT-BUSSOLA SNODO - 15Pz	
07300364	STRAIGHT FITTING 1/8 M CON. - FITTING.6 340	RACCORDO DIR. 1/8 M CON. - CALZAM.6 340	
R07300364	KIT-STRAIGHT FITTING 1/8 M CON. - FITTING.6 340 - 8Pcs	KIT-RACCORDO DIR. 1/8 M CON. - CALZAM.6 - 8Pz	
07300452	T FITTING 1/8 M-M-F	RACCORDO T 1/8 M-M-F	
07300530	FITTING L 1/8 F A CALZ. 347 6	RACCORDO L 1/8 F A CALZ. 347 6	
R07300530	KIT-FITTING L 1/8 F A CALZ. 347 6 -5Pcs	KIT -RACCORDO L 1/8 F A CALZ. 347 6-5PZ	
07300544	MF 1/8" ES 14 FOR S/S FILTER D8	PROLUNGA MF 1/8" ES 14 x FILTRO INOX D8	
07300720	L FITTING 1/4 M - FITTINGS	RACCORDO L 1/4 M - CALZAM.	
07300904	COLD STEAM WAND CONNECTION	ATTACCO LANCIA VAPORE FREDDA OSCAR MOOD	
11600001.W	WHITE SILICONE PIPE 4x7,5 60Sh(1mt=41gr) PLATINICO S	TUBO SILICONE BIANCO4x7,5 60Sh(1mt=41gr) PLATINICO S	
11740001	TEFLON PIPE 6/4	TUBO TEFLON 6/4	
75006038.1	STEAM NOOZLE M8,65X0,75 F1,2 ESAG.12	BECCO VAPORE M8,65x0,75 F. 1,2 ESAG.12	
98004001	S/S FILTER D8	FILTRO INOX DIAM. 8	
98030430	BOILER-STEAM SOL. VALVE PIPE	TUBO CALDAIA - EV VAPORE OSCAR MOOD	
98030432	SOL.VALVE-STEAM WAND PIPE	TUBO EV VAPORE - LANCIA VAPORE OSCAR MOOD	
98060034	COLD STEAM WAND KIT PROFESSIONAL	KIT LANCIA VAPORE FREDDA OSCAR MOOD PROFESSION	
98110001	RETURN VALVE 1/8 F-FOT-58	VALVOLA RITEGNO COMPL. 1/8 F-F OT-58	
R98110001	KIT-RETURN VALVE 1/8 F-F - 3Pcs	KIT-VALVOLA RITEGNO COMPL. 1/8 F-F - 3Pz	

GRUPPO IDR.+LANCIA VAPORE

HYDR. GROUP+STEAM WAND

COD.	DESCRIPTION	DESCRIZIONE	VAL.
98200000000020	3LT WATER TANK SET WITH FLOAT	ASS. TANICA ACQUA 3LT CON GALLEGGIANTE	
R98200000000020	KIT-3LT WATER TANK SET WITH FLOAT - 1Pcs	KIT-ASS. TANICA ACQUA 3LT CON GALLEGGIANTE - 1Pz	

COMPONENTI SILENT PACK

PARTS SILENT PACK

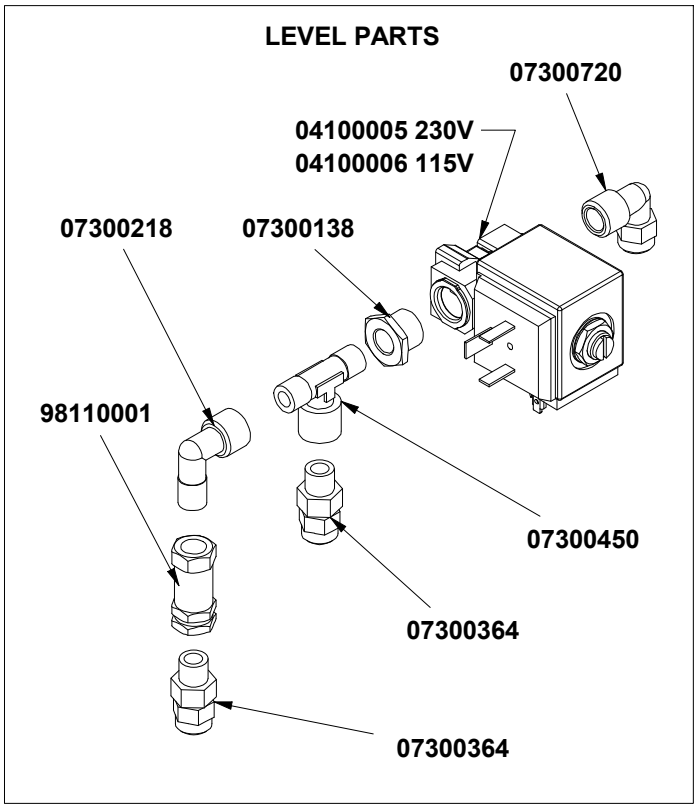

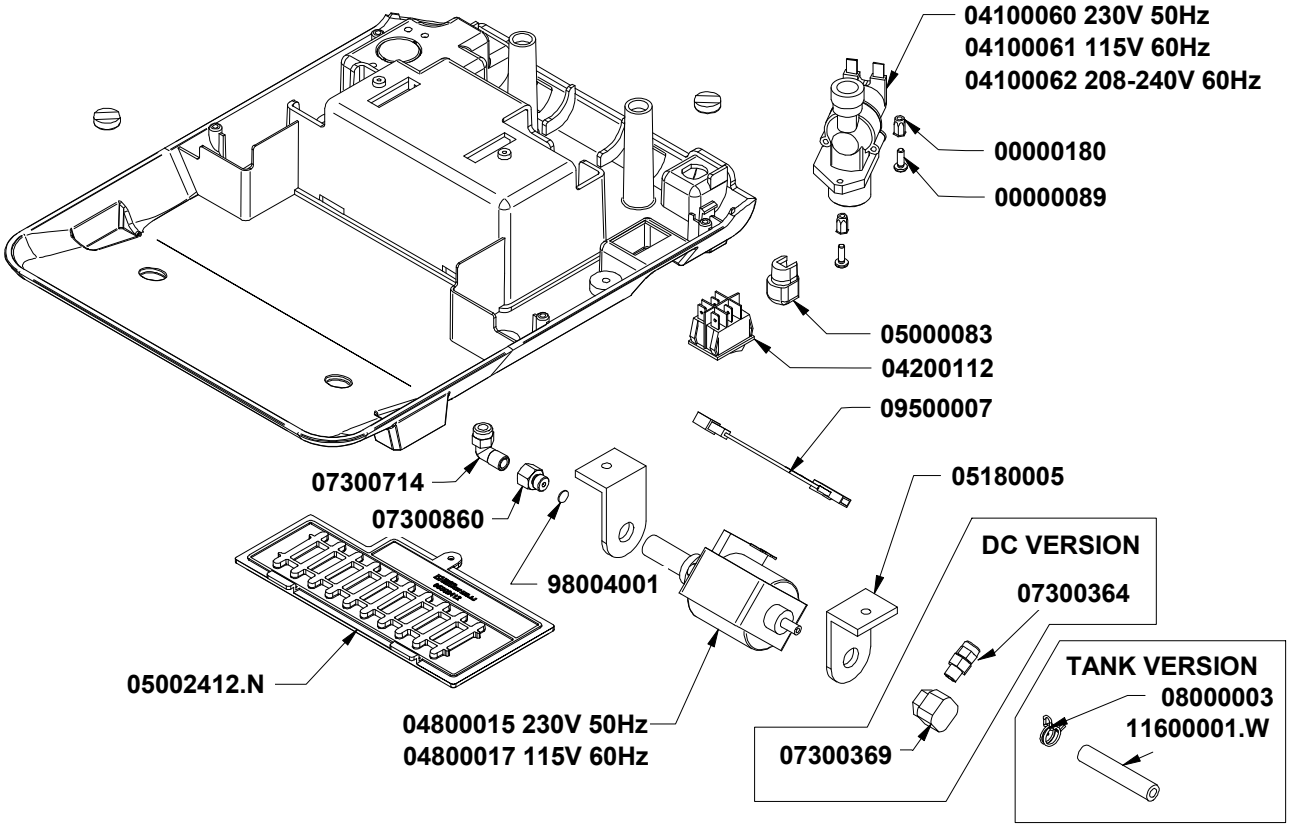

COMPONENTI SILENT PACK

PARTS SILENT PACK

COD.	DESCRIPTION	DESCRIZIONE	VAL.
00000089	S/S CROSSHEAD CAP SCREW M4x12 DIN7985	VITE INOX M4x12 TC TCR DIN7985	
00000180	HEX RIVET NUT M4	RIVETTO M4 ESAGONALE ER	
04100005	2WAY SOLENOID 1/4-1/4 220V 50/60Hz F2 CE TH 1xM4	E.V. NC 2VIE 1/4-1/4 220-230V 50/60Hz EPDM F2 CEPIEDINC	
R04100005	KIT-2WAY SOLENOID 1/4-1/4 220V 50/60Hz F2 - 1Pcs	KIT-E.V. NC 2VIE 1/4-1/4 220-230V 50/60Hz EPDM- 1Pz	
04100006	2WAY SOLENOID 1/4-1/4 110-120V 60Hz F2 UL TH 1xM4	E.V. NC 2VIE 1/4-1/4 110-120V 60Hz EPDM F2 ULPIEDINO FI	
04100060	2WAY SOLENOID 3/4-JG 6 STRAIGHT+FILTR F.2,5 230V50,	E.V. NC 2VIE 3/4-JG 6 DIRITTA REGOL+FILTR F.2,5230V 50/	
R04100060	KIT-2WAY SOLENOID 3/4-JG 6 STRAIGHT+FILTR F.2,5 - 1P	KIT-E.V. NC 2VIE 3/4-JG 6 DIRITTA REGOL+FILTR F.2,- 1Pz	
04100061	2WAY SOLENOID 3/4-JG 6 STRAIGHT+FILTR F.2,5 115V60	E.V. NC 2VIE 3/4-JG 6 DIRITTA REGOL+FILTR F.2,5115V 60H	
04100062	2WAY SOLENOID 3/4-JG6 STRAIGHT ULREGOL+FILTR F.2	E.V. NC 2VIE 3/4-JG6 DIRIT. ULREGOL+FILTR F.2,5208/240V	
04200112	RED LIGHT 0/1 BIPOLAR SWITCH UL 16A	INTERRUTTORE BIPOLARE LUMINOSO ROSSO 0/1RETTAN	
04800015	SILENT PUMP 220/240V 50Hz 35W	POMPA ELETTROMECC. 220/240V 50Hz SILENT 35W	
04800017	SILENT PUMP 120V 60Hz 40W	POMPA ELETTROMECC. 120V 60Hz SILENT 40W	
05000083	CABLE LOCK SR 11-2 BLACK	BLOCCACAVO SR 11-2 NERO	
05002412.N	BASE CLOSURE OSCAR II BLACK	CHIUSURA FONDO OSCAR II NERO	
05180005	L-SHAPED PUMP BRACKET	SUPPORTO POMPA AD L	
07300138	FITTING ADAPTER 1/4M-1/8F ES.17 AGG.29.05.96 OT-58	RIDUZIONE 1/4"M - 1/8"F ES.17 AGG. 29.05.96 OT-58	
07300218	FITTING L 1/8 M-F 458	RACCORDO L 1/8 M-F 458	
07300364	STRAIGHT FITTING 1/8 M CON. - FITTING.6 340	RACCORDO DIR. 1/8 M CON. - CALZAM.6 340	
R07300364	KIT-STRAIGHT FITTING 1/8 M CON. - FITTING.6 340 - 8Pcs	KIT-RACCORDO DIR. 1/8 M CON. - CALZAM.6 - 8Pz	
07300369	DIRECT ATTACHMENT FITTING FOR ELECTROMECHANIC	RACCORDO ATTACCO DIRETTO PER POMPAELETTROME	
07300450	FITTING T 1/8 M-F-M OT-57	RACCORDO T 1/8 M-F-M OT-57	
07300714	L FITTING 1/8 M - FITTINGS.6	RACCORDO L 1/8 M - CALZAM.6	
R07300714	KIT-L FITTING 1/8 M - FITTINGS.6 - 6Pcs	KIT-RACCORDO L 1/8 M - CALZAM.6 - 6Pz	
07300720	L FITTING 1/4 M - FITTINGS	RACCORDO L 1/4 M - CALZAM.	
07300860	POWER GIGLER 1/8 M-F F.0,7 OT-58	GIGLER ALIMENTAZIONE 1/8 M-F F.0,7 OT-58	
08000003	HOSE CLAMP D9,1	FASCETTA STRINGITUBO D9.1	
09500007	2MMT 100°C THERMAL PROTECTION	TERMOPROTETTORE 2MMT 100°C	
11600001.W	WHITE SILICONE PIPE 4x7,5 60Sh(1mt=41gr) PLATINICO S	TUBO SILICONE BIANCO4x7,5 60Sh(1mt=41gr) PLATINICO S	
98004001	S/S FILTER D8	FILTRO INOX DIAM. 8	
98110001	RETURN VALVE 1/8 F-FOT-58	VALVOLA RITEGNO COMPL. 1/8 F-F OT-58	
R98110001	KIT-RETURN VALVE 1/8 F-F - 3Pcs	KIT-VALVOLA RITEGNO COMPL. 1/8 F-F - 3Pz	

COMP. GRUPPO CALDAIA

BOILER GROUP PARTS

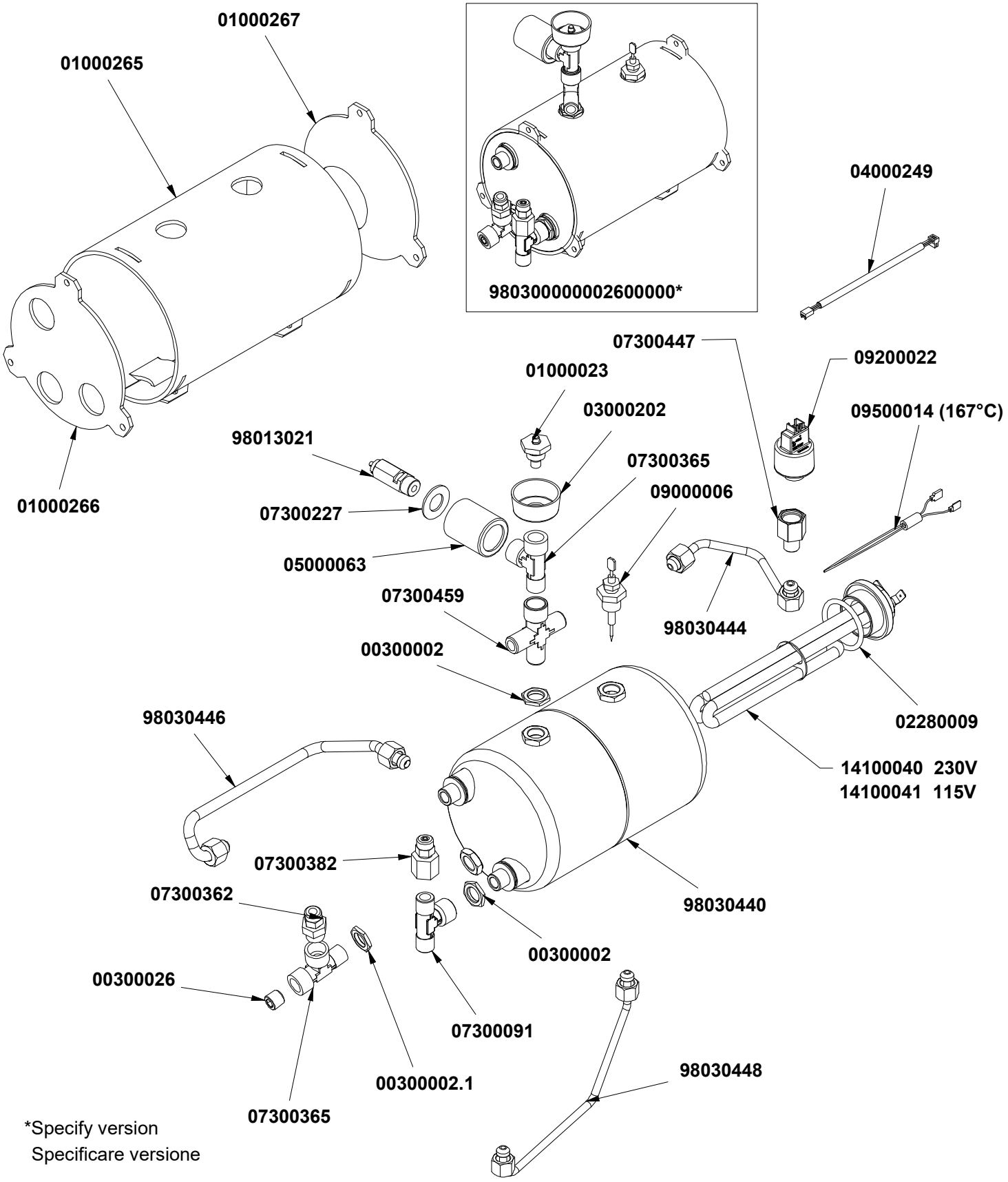

*Specify version
Specificare versione

COMP. GRUPPO CALDAIA

BOILER GROUP PARTS

COD.	DESCRIPTION	DESCRIZIONE	VAL.
00300002	BRASS NUT 1/4 D3 CH18	DADO OT 1/4 SPESS.3 CH18 AGG. 22.07.96	
R00300002	KIT-BRASS NUT 1/4 D3 - 15Pcs	KIT-DADO OT 1/4 SPESS.3 - 15Pz	
00300002.1	BRASS NUT 1/4 GAS D3 OVERSIZE 0.3mm CH18	DADO OT 1/4 GAS MAGGIORATO 0.3mm SPESS.3 CH18	
00300026	CONICAL TAP 1/4 GAS	TAPPO CONICO 1/4 GAS	
01000023	ANTI VACUUM VALVE	VALVOLINA SFIATO	
R01000023	KIT-ANTI VACUUM VALVE - 3Pcs	KIT-VALVOLINA SFIATO - 3Pz	
01000265	BOILER INSULATION OSCAR II	ISOLANTE CALDAIA OSCAR II **AD ESAURIMENTO DARE01	
01000266	RIGHT BOILER INSULATION D110 OSCAR II	ISOLANTE D.110 DX CALDAIA OSCAR II**AD ESAURIMENTC	
01000267	LEFT BOILER INSULATION D110 OSCAR II	ISOLANTE D.110 SX CALDAIA OSCAR II**AD ESAURIMENTC	
02280009	GASKET O RING 139/4131 D40 EP851	GUARN. OR 139/4131 D.40 EP851	
03000202	CONDENSATION TRAY MASTER	VASCHETTA RACCOGLI CONDENSA AGG. 07.06.97	
04000249	3POLE CONN CABLE RAST 2.5/MOLEX L = 400mm for PST	CAVO COLL.3P RAST 2,5/MOLEX L.400mm x TRASDUTTORI	
05000063	SAFETY VALVE COVER PA6	COPRI VALVOLA SICUREZZA PA6	
R05000063	KIT-SAFETY VALVE COVER PA6 - 8Pcs	KIT-COPRI VALVOLA SICUREZZA PA6 - 8Pz	
07300091	T FITTING MFM 1/4 CYLIN.	RACCORDO T 1/4 M-F-M CILIN.	
07300227	BRASS WASHER D.26X13,5X1,5 ADD.5.06.03	RONDELLA OT D.26x13,5x1,5 AGG.5.06.03	
07300362	STRAIGHT FITTING 1/4 M-FITTINGS.6 340	RACCORDO DIR. 1/4 M-CALZ.6 340	
07300365	T FITTING 1/4 FFM	RACCORDO T 1/4 M-F-F	
07300382	STRAIGHT FITTING 1/4 F	RACCORDO DIR. 1/4 F - CALZAM.	
07300447	OSCAR MOOD PRESSURE SENSOR FITTING	RACCORDO SENSORE PRESSIONE OSCAR MOOD	
07300459	CROSS FITTING 1/4 M-M-M-F OT-58 NIK	RACCORDO CROCE 1/4 M-M-M-F OT-58 NIK	
09000006	COMPLETE AUTOLEVEL PROBE L70 + PTFE	SONDA AUTOLIVELLO COMP. L=70 CON GOLA	
R09000006	KIT-COMPLETE AUTOLEVEL PROBE L70 + PTFE - 1Pcs	KIT-SONDA AUTOLIVELLO COMP. L=70 CON GOLA - 1Pz	
09200022	PRESSURE TRANSDUCER 0-4 BAR 3/8	TRASDUTTORE DI PRESSIONE 0-4 BAR 3/8	
R09200022	KIT-PRESSURE TRANSDUCER 0-4 BAR 3/8-1Pcs	KIT -TRASDUTTORE DI PRESSIONE 0-4 BAR 3/8-1PZ	
09500014	HEATING ELEMENT THERMAL PROTECTION G5 167°C 16	TERMOPROTETTORE x RESISTENZA G5 167°C 16A 250V U	
R09500014	KIT-HEATING ELEMENT THERMAL PROTECTION - 2Pcs	KIT-TERMOPROTETTORE x RESISTENZA G5 167°C 16A 250	
14100040	BOILER HEATING ELEMENT OSCAR 1' 1200W 230V +T.P.	RESISTENZA CALDAIA OSCAR 1" 1200W 230V +T.P.	
R14100040	KIT-BOILER HEATING ELEMENT 1200W 230V - 1Pcs	KIT-RESISTENZA CALDAIA 1200W 230V +T.P. - 1Pz	
14100041	BOILER HEATING ELEMENT 1 1200W 115V + T.P.	RESISTENZA CALDAIA OSCAR 1 1200W 115V +T.P.	
98013021	SAFETY VALVE A5 1/4 REG 2,1 BAR OT-58	VALVOLA SICUREZZA A5 1/4 TARATA 2,1 BAR OT-58	
R98013021	KIT-SAFETY VALVE A5 1/4 REG 2,1 BAR - 2Pcs	VALVOLA SICUREZZA A5 1/4 TARATA 2,1 BAR - 2Pz	
98030440	WELDED BOILER OSCAR II	CALDAIA SALDATA OSCAR II	
98030444	PRESSURE GAUGE-BOILER TUBE OSCAR II	TUBO PRESSOST-CALDAIA OSCAR II	
98030446	SUPERIOR DISPENSING GR-BOILER TUBE OSCAR II	TUBO SUPERIORE GRUPPO EROG.- CALDAIA OSCAR II	
98030448	INFERIOR DISPENSING GR-BOILER TUBE OSCAR II	TUBO INFERIORE GRUPPO EROG.- CALDAIA OSCAR II	
980300000002600001	BOILER ASSEMBLY 230V	ASS. CALDAIA OSCAR II 230V	
980300000002600002	BOILER ASSEMBLY 115V	ASS. CALDAIA OSCAR II 115V	

COMP. ELETTRICI ED ELETTR.

ELECTRIC AND ELECTRONIC PARTS

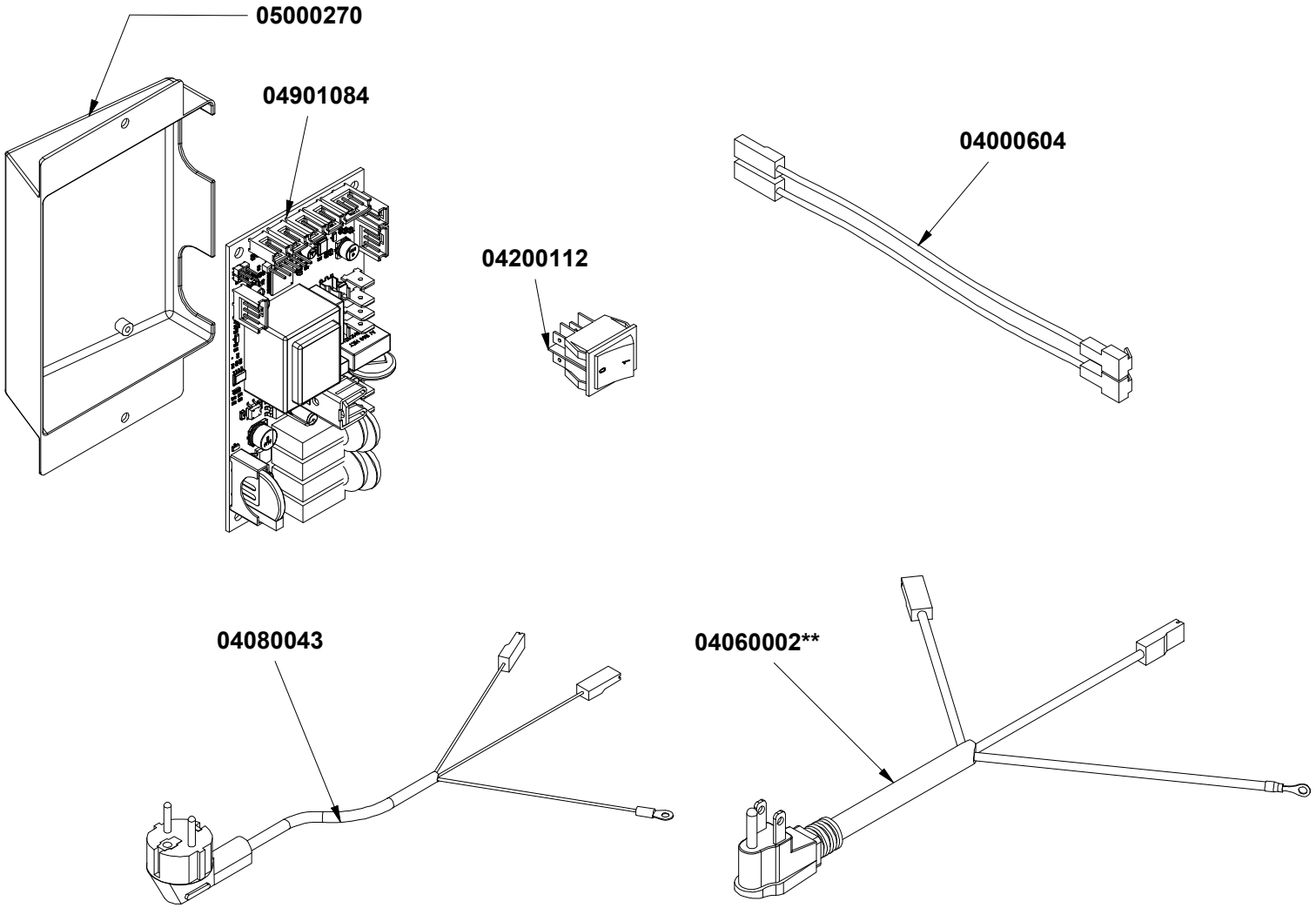

CODE	DESCRIPTION	DESCRIZIONE
04000694	COMPLETE WIRING	CABLAGGIO COMPLETO
04000696	CABLE MAIN BOARD-BREW.BOARD	CABL.CENTR.PR.-SCHEDA ER.
04000698	CABLE BREW.BOARD-WIFI MODULE	CABL.SCHEDA ER.-MODULO WIFI

**North America Market
Mercato Nord America

COMP. ELETTRICI ED ELETTR.

ELECTRIC AND ELECTRONIC PARTS

COD.	DESCRIPTION	DESCRIZIONE	VAL.
04000604	EXTRA INLET SOLENOID MICROBAR 04 ACQUASTOP	SUPPLEMENTO EV ENTRATA MICROB.2004 ACQUASTOP	
04000694	COMPLETE WIRING	CABLAGGIO COMPLETO OSCAR MOOD	
04000696	CONNECTION CABLE MAIN BOARD-DELIVERY BOARD	CAVO CONNESSIONE CENTR.-SCHEDA EROG. OSCAR MC	
04000698	CABLE CONNECT. POUR. BOARD - WIFI MOD.	CAVO CONNESSIONE SCHEDA EROG. - MODULO WIFI OS(	
04060002	PWR SPPLY CABLE UL AWG3x18 SJO 10A 90C 2mt USA D	CAVO ALIM. AWG3x18 SJO 90°C UL/CSA 2mt SPINA USADIF	
04080043	CABLE+PLUG CE SCHUKO H05VV-F 3x0,75	CAVO ALIM. 2mt CE SPINA SCHUKO 90° H05VV-F 3x0,75	
04200112	RED LIGHT 0/1 BIPOLAR SWITCH UL 16A	INTERRUTTORE BIPOLARE LUMINOSO ROSSO 0/1RETTAN	
04901084	MAIN BOARD	CENTR. ELETT. OSCAR MOOD	
05000270	SUPPORT CENTRAL CONTROL BOARD MUSICA	SUPP. CENTRALINA "MUSICA"	

V.04 05/08/2022

www.nuovasimonelli.it

Simonelli Group
Via E. Betti, 1
62020 Belforte del Chienti
Macerata - Italy
T +39 07339501
info@simonelligroup.it
www.nuovasimonelli.it

Nuova Distribution Usa
6940 Salashan Pkwy, Bldg, A
Ferndale, WA 98248
T +1 3603662226
info@simonelliusa.com
www.simonelliusa.com

Nuova Simonelli Asia Pacific
61 Kaki Bukit Ave 1
#02-24 Shun Li Industrial Park
Singapore 417943
T +65 68410985
www.nuovasimonelliasiapacific.com

Nuova Distribution France
Hexapole - Actipole - Bat 5
Rue Maurice Herzog
73420 Viviers Du Lac
T +33 (0) 967894852
info@nuovadistribution.fr

nuova SIMONELLI®
The coffee machines you can trust.