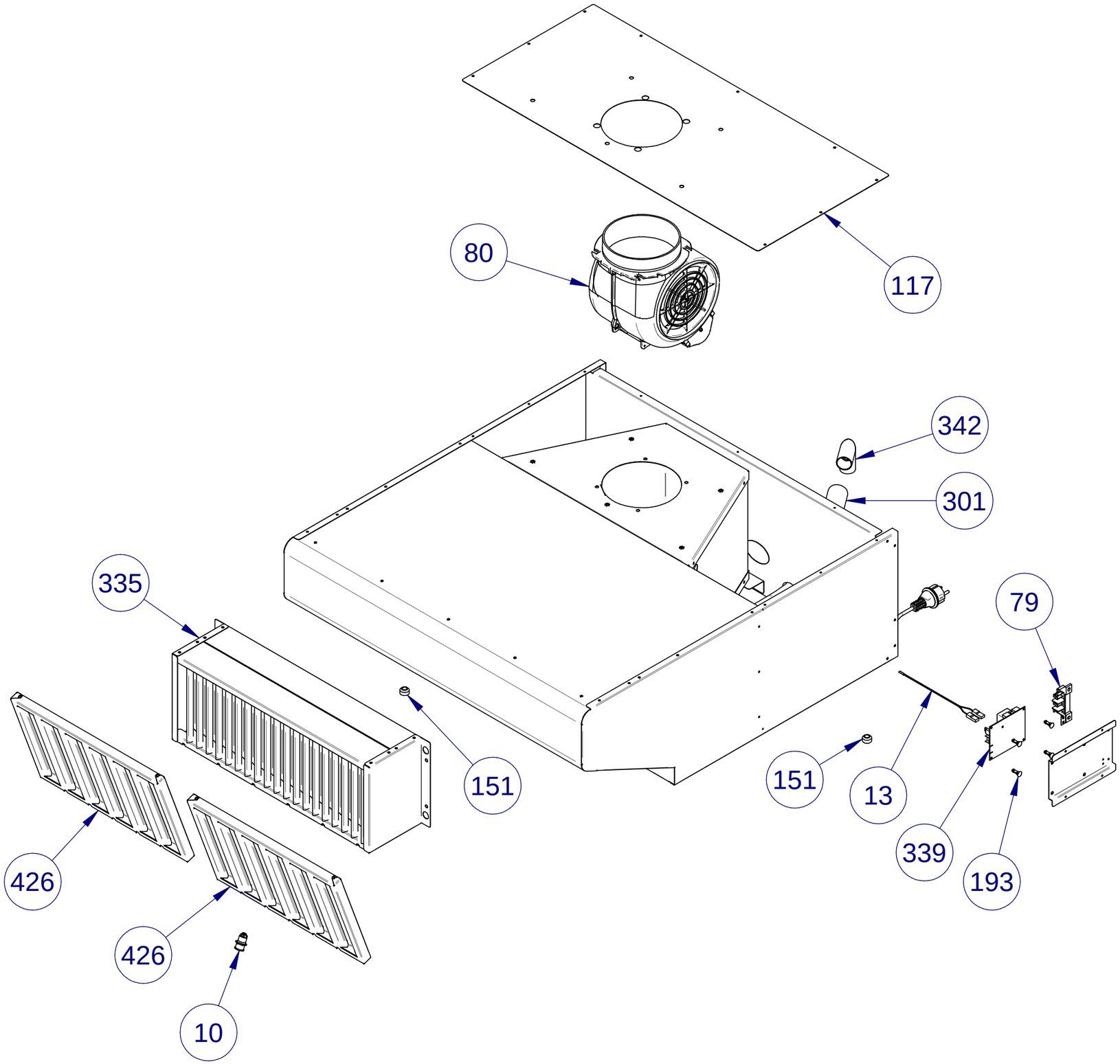

Scale : 1:5	mm	A3	Reserved property :	Drawing by: REND	Date : 19/03/2018	Description : **HOOD EXPLODED VIEW**	
					Model :	Name: **H8 EXPLODED VIEW**	▪▪▪