Custom Refrigerators



VITRIFRIGO

COOL AND BEYOND



VITRIFRIGO.

Top-level certification

Vitrifrigo is ISO 9001 certified since over 10 years, but any product with specific certifications can be supplied.

IEC CB SCHEME - International system for mutual acceptance by member states of the tests, reports and certificates concerning the safety of electric and electronic equipment. It is the preparatory stage for obtaining local certification marks, such as: Global Mark AU and cTick (Australia), CCC (China).

UL - Essential for the US market.

NSF - Mark guaranteeing international acceptance of a products concerning compliances with the standard mainly accepted in the fields of public health and safety.

100% Made in Italy



Milk Cooler 3
Coffee machines refrigerators

Minibar 13
Hotel and office refrigerators

Wine cellars 15
Wine cellars

Bag in Box 17
Bag in box refrigerators

BBQ 19
Outdoor kitchens refrigerators

VITRIFRIGO
COOL AND BEYOND

MILK COOLERS
FOR COFFEE MACHINES



FG10 DGT series are equipped with a digital thermostat, which, combined with the stainless steel sensor, allows to get an exact milk temperature control.

OPTIONAL

MILK LEVEL SENSOR

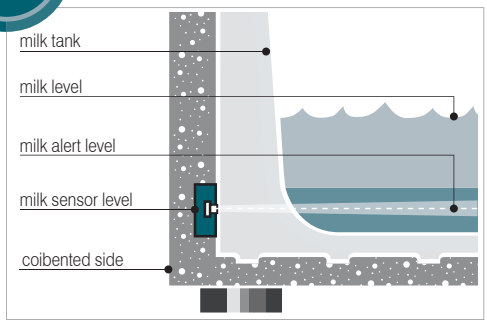

The capacitive milk level sensor is able to detect the milk presence inside the milk box and send an alert signal to the digital thermostat.

On request, it's also possible to provide the "empty signal" directly to the electronic thermostat of the fridge.

The FG10i DGT Chill & Cup Warmer is also equipped with a stainless steel top "cup warmer" shelf for 17+17 units.

	Volume	Net weight	Power supply
FG10i	lt. 7,5	kg. 12	220-240V/50Hz 220V/60Hz (*)
FG10i DGT	lt. 7,5	kg. 14	220-240V/50Hz 220V/60Hz (*)
FG10i DGT Chill&CW	lt. 7,5	kg. 17	220-240V/50Hz 220V/60Hz (*)

(*) optional 115V - 60Hz

a	b	h	c	d	e
462	225	344	163	173	272
462	225	392	163	173	272
462	225	425	163	173	272

dimensions (mm.)

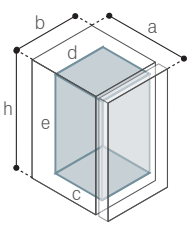

FG10
SERIES

Included
4.0 lt.
a= 160
b= 173
h= 219









FG10i DGT Chill&CW



OPTIONAL

17P + 17P



FG10i



FG10i DGT



OPTIONAL

VITRIFRIGO
COOL AND BEYOND

MILK COOLERS
FOR COFFEE MACHINES



One of the most important models in the FG12 series is the FG12iX HiTop, with all-stainless-steel structure, digital thermostat temperature control and cup warmer top for 17 elements.

The FG12iX HiTop can be used alongside the CW45 model, which features a structure with the same design and material, creating a cup warmer unit with three shelves for a total of 45 elements.

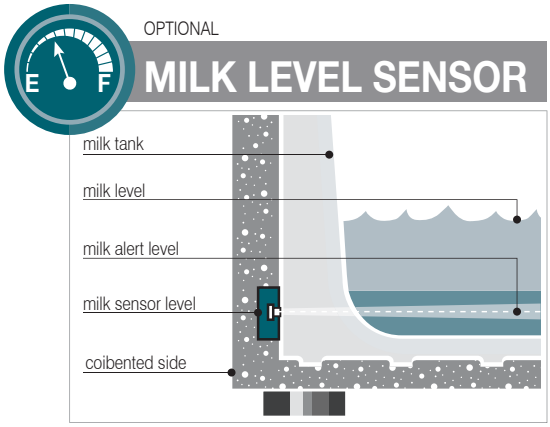

The capacitive milk level sensor is able to detect the milk presence inside the milk box and send the "empty signal" directly to the automatic coffee machine



FG12i OR

	Volume	Net weight	Power supply
FG12i HiTop	lt. 11,5	kg. 15	220-240V/50Hz 220V/60Hz (*)
FG12iX HiTop	lt. 11,5	kg. 20	220-240V/50Hz 220V/60Hz (*)
FG12i OR	lt. 11,5	kg. 19	220-240V/50Hz 220V/60Hz (*)
CW45	45 cups	kg. 11	220-240V/50Hz 220V/60Hz (*)

(*) optional 115V - 60Hz

a	b	h	c	d	e
401	187	496	330	137	256
438	189	646	330	137	256
600	313	206	330	256	137
400	189	646			

dimensions (mm.)

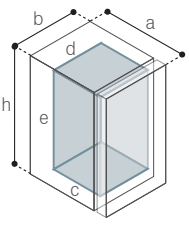

FG12 SERIES

Included

7.0 lt.

a= 321
b= 136
h= 224

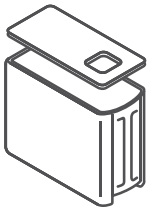





17P

FG12iX HiTop

Available also as Chill & Cup Warmer



OPTIONAL



45P

CW45







FG12i HiTop

OPTIONAL

VITRIFRIGO
COOL AND BEYOND

MILK COOLERS
FOR COFFEE MACHINES



Three large-capacity models with polished stainless steel interior and outer casing in embossed plastic-coated sheet metal or brushed stainless steel.
All models have central security lock with key.





FG14i

	Volume	Net weight	Power supply
FG14i	lt. 20	kg. 15	220-240V/50Hz 220V/60Hz (*)
FG14iX	lt. 20	kg. 17	220-240V/50Hz 220V/60Hz (*)
FG14iX BM	lt. 20	kg. 17	220-240V/50Hz 220V/60Hz (*)

(*) optional 115V - 60Hz

a	b	h	c	d	e
578	228	423	320	176	352
580	228	420	320	176	352
398	228	600	320	176	352

dimensions (mm.)

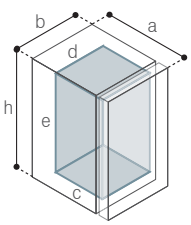

FG14
SERIES

Included
2x 4.0 lt.
a= 160
b= 173
h= 219

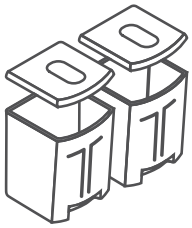



FG14iX



FG14iX



FG14iX BM



FG14iX BM

MILK COOLERS
FOR COFFEE MACHINES



The FG16 range is the new 2017 model from Vitrifrigo, designed to satisfy the latest demand of higher milk quantity together with the newest construction technology.

The innovative “dual milk” system offer the possibility to manage two different kind of milk with the same milk box.

MILK TEMPERATURE SENSOR

The FG16iDGT series are equipped with a digital thermostat which, combined with a an innovative sensor, shows the exact milk temperature inside the unit.

STANDARD

MILK LEVEL SENSOR

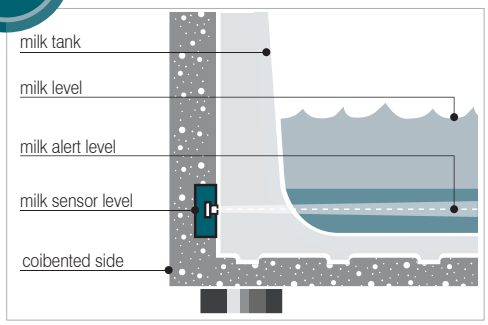

The capacitive milk level sensor is able to detect the milk presence inside the milk box and send an alert signal to the digital thermostat.

On request, it's also possible to provide the "empty signal" directly to the electronic thermostat of the fridge.

R600a
LOW GWP
REFRIGERANT

	Volume	Net weight	Power supply
FG16i	lt. 13	kg. 14	220-240V/50Hz 220V/60Hz (*)
FG16i DGT	lt. 13	kg. 15	220-240V/50Hz 220V/60Hz (*)
FG16i DGT DUAL MILK	lt. 13	kg. 15	220-240V/50Hz 220V/60Hz (*)

(*) optional 115V - 60Hz

a	b	h	c	d	e
515	230	349	278	173	277
510	230	390	278	173	277
510	230	390	278	173	277

dimensions (mm.)

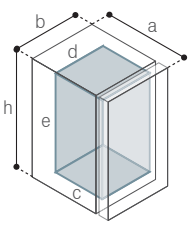

FG16 SERIES

Included
9.0 lt.
a= 172
b= 268
h= 262

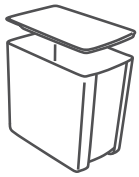

DUAL MILK

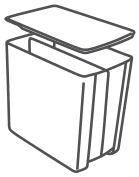



FG16i

STANDARD





FG16i DGT



FG16i DGT
DUAL MILK

2x STANDARD



STANDARD

VITRIFRIGO
COOL AND BEYOND

MILK COOLERS
FOR COFFEE MACHINES

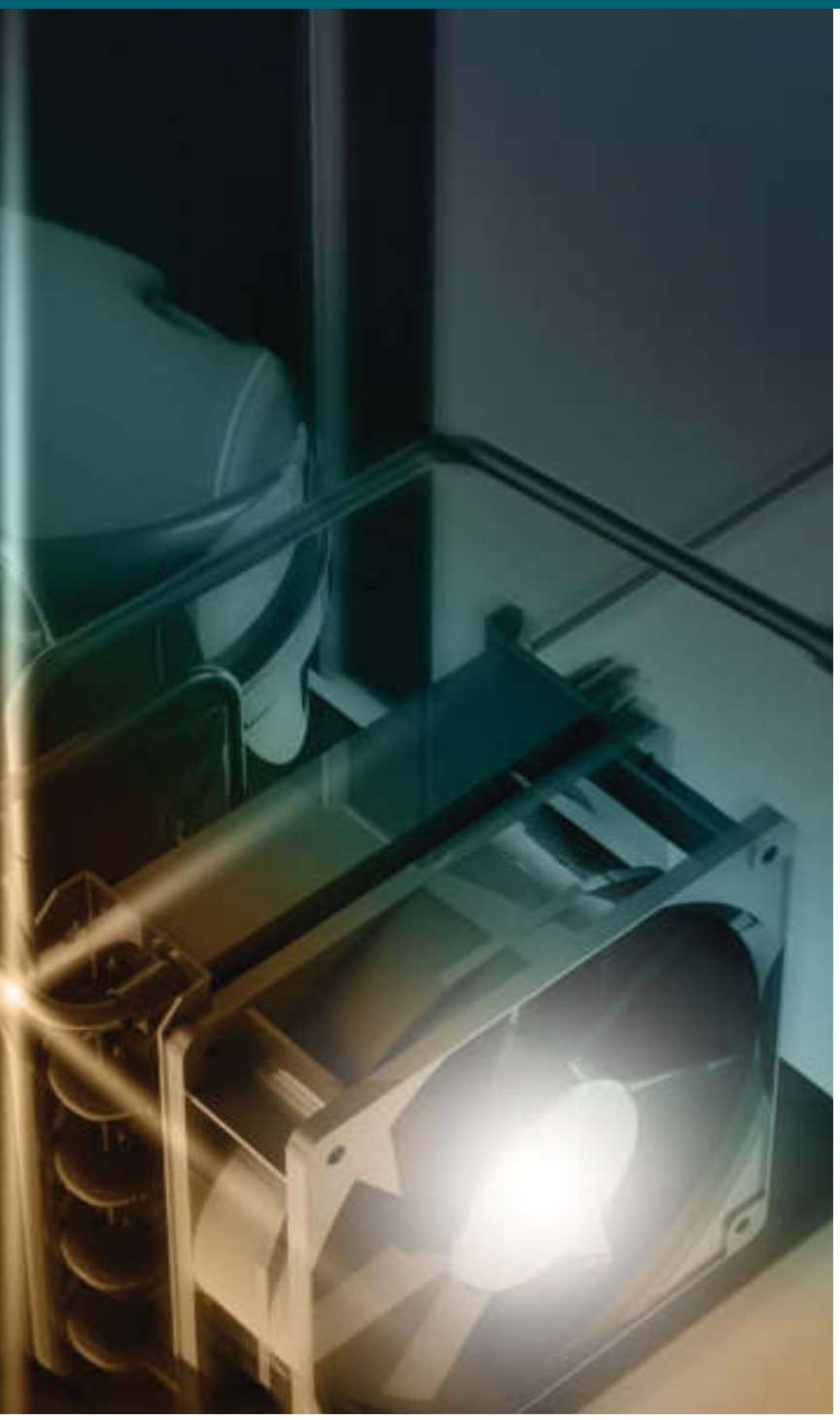

Configurations for external cooling unit.

On request, the models from the FG series can be made in a version without casing and with an external refrigerating unit, positioned as illustrated in the figure.

Custom designs.

Thanks to the know how from regular collaboration with the major European brands of automatic expresso machine manufacturers, Vitrifrigo is available to develop new products, well aware that it is a partner technologically on the cutting edge.

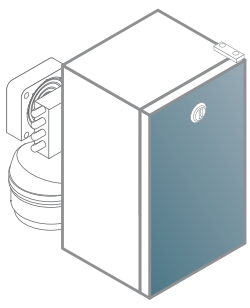

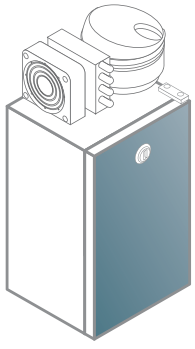

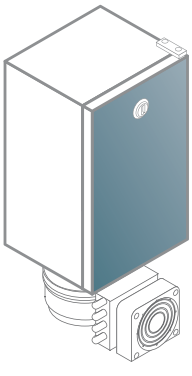

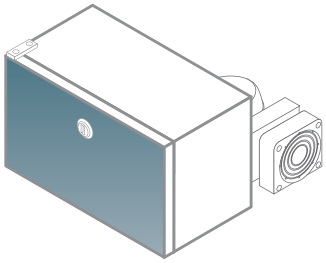



VERTICAL SIDE



VERTICAL BOTTOM



VERTICAL TOP



HORIZONTAL REAR

MINIBARS
FOR HOTEL AND OFFICE



The best choice

A new compressor, combined with R600a high-efficiency natural refrigerant gas with low impact on the environment, have achieved surprising savings and an energy class A+++ rating.

Notable energy savings, together with extremely silent operation, make the NEXT DM range the ideal appliance for any hotel room, in either the panel (P) or mirrored glass door (V) versions.



Panel colour

black



wenge



walnut



bleached oak



	Volume	Net weight	Power supply
C330 P NEXT DM	lt. 33	kg. 16	220 - 240V
C420 P NEXT DM	lt. 40	kg. 17	220 - 240V
C330 V NEXT DM	lt. 33	kg. 20	220 - 240V
C420 V NEXT DM	lt. 40	kg. 21	220 - 240V

dimensions (mm.)

a	b	h
445	390	540
485	390	540
445	390	540
485	390	540

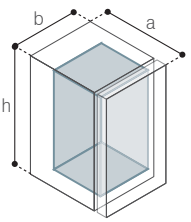

SILENT

Noise is barely perceived up to a maximum of 1 meter away

FAST

High-speed cooling

EASY

Mechanic thermostat



C420 P NEXT DM

STANDARD



Internal LED lighting system

STANDARD



The drinks shelf for 1,5-litre bottles
P version only

OPTIONAL



Sliding hinge - P version only

OPTIONAL

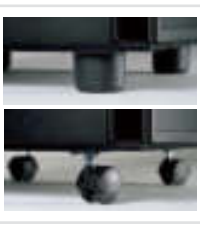

Available with 4.5 cm. feet and 6 cm. pivoting wheels - except for C330V NEXT DM, C420V NEXT DM



C420 V NEXT DM



WINE CELLARS



Right temperature

A series of refrigerators specifically for the wine sector.

The available wine cellar models can hold 12 - 20 - 33 bottles with digital thermostat and brushed stainless steel finish.

	Volume	Net weight	Power supply	a	b	h	T Range
DCW 46	lt. 46	kg. 18	220 - 240V	470	430	520	+4°C / +18°C
DCW 62	lt. 62	kg. 21	220 - 240V	470	430	650	+4°C / +18°C
DCW 95	lt. 95	kg. 26	220 - 240V	470	480	840	+4°C / +18°C

dimensions (mm.)

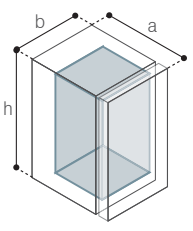



DCW 46







DCW 62







DCW 95





BAG IN BOX
REFRIGERATORS

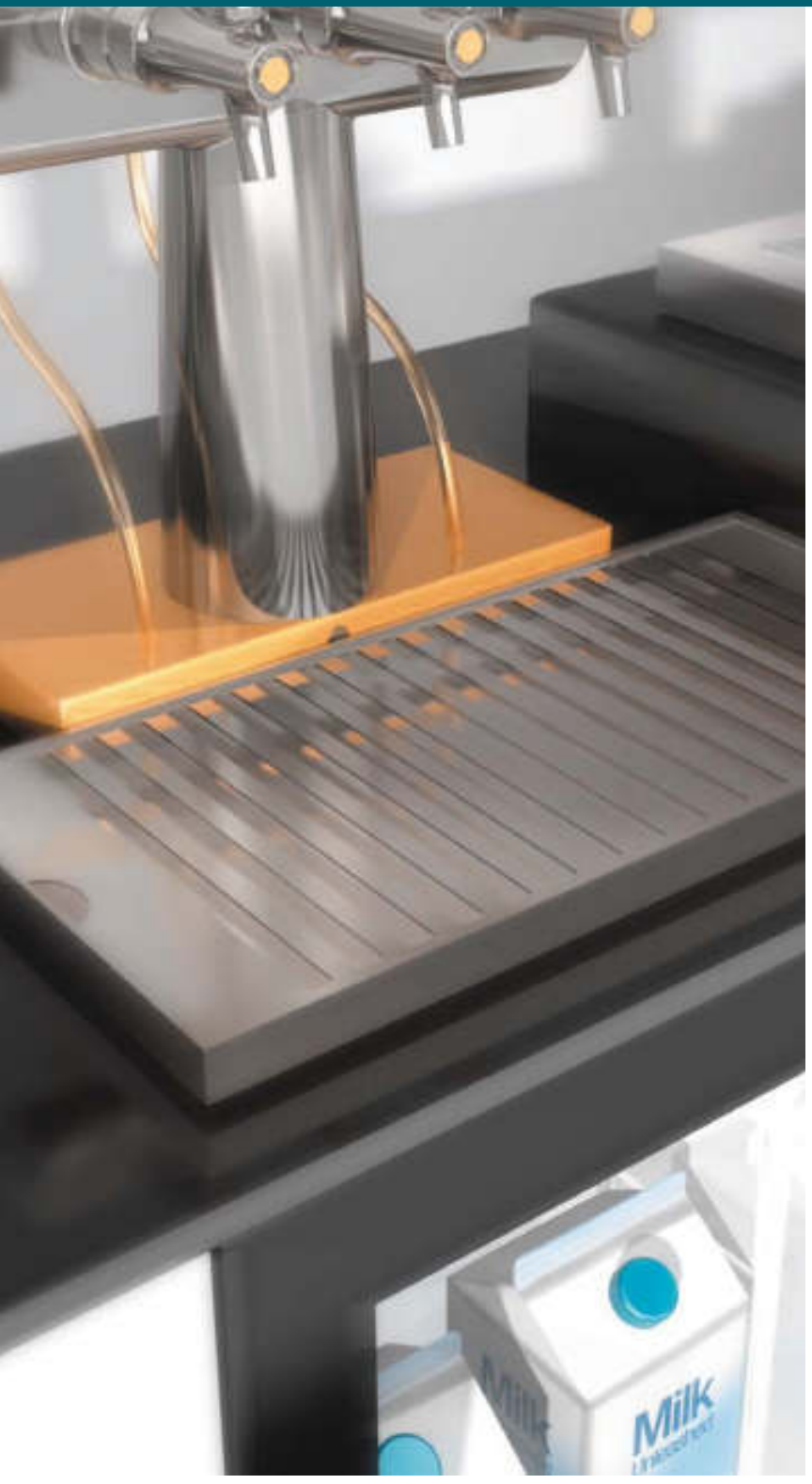

Refrigerators for bag in box.

The bag-in-box packaging protects the contents from air, light, temperature changes and external agents.

It replaces a host of different types of container for liquids in view of its practical use, cost effectiveness, sturdiness, shatterproof qualities, hygiene, eco-friendliness and above all excellent capacity for chilling.

The different volumes available have led to the creation of a range able to satisfy a wide variety of different needs and including the “stand alone” and remote installation versions.

	Volume	Net weight	Power supply
C39 PV	lt. 39	kg. 20	220 - 240V
C60 PV	lt. 60	kg. 24	220 - 240V
COOLBAG	lt. 37	kg. 24	220 - 240V

a	b	h
415	390	544
470	470	619
387	593	471

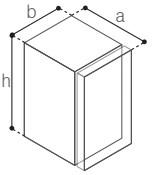

Bag in box max

c	d	e
160	330	410
190	375	475

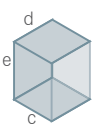

dimensions (mm.)



C39PV





COOLBAG

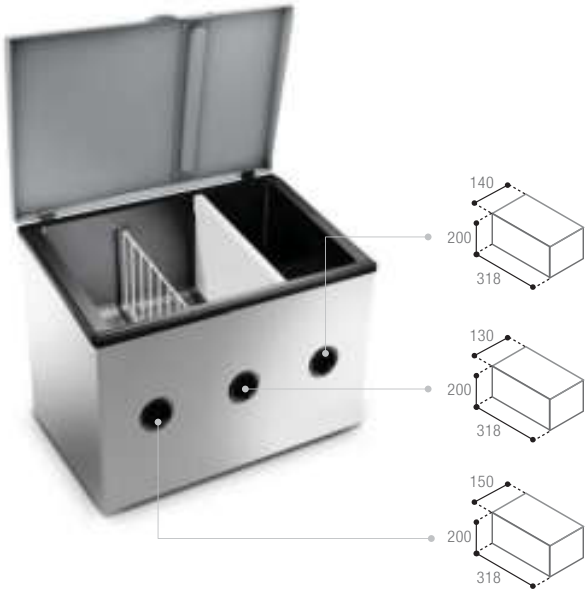



C60PV



BBQ
& OUTDOOR KITCHENS



Internal Icemaker

Design and Quality are Made in Italy

Modular refrigerators with door or drawers, entirely in **AISI 316 STAINLESS STEEL**, complete with electronic digital thermostat and interior LED lighting.
Devised and designed to withstand external use, they can guarantee maximum protection against the elements. Design innovation and culture come together in top-quality products to bring you quality, reliability and performance.



Flush flange
Door Inside



Surface flange
Door Outside

		Net weight	Bottles max H	Power supply
DW 35	lt. 35	kg. 24	mm. 155	220 - 240V
DW 42	lt.42	kg. 22	mm. 420	220 - 240V
DW 70	lt. 75	kg. 32	mm. 300	220 - 240V
DW 100	lt. 95	kg. 31	mm. 380	220 - 240V
C 180	lt. 157	kg. 40	-	220 - 240V
DW 180	lt. 80+64	kg. 55	mm. 310+310	220 - 240V
DW 210	lt. 78+104	kg. 60	mm. 240+400	220 - 240V



DW 35 1 RFX

Available as

1 Refrigerator

2 Freezer

3 Freezer + icemaker



DW 42

1 RFX



DW 70

1 RFX
2 BTX
3 BTX IM



C 180 1 RFX



DW 100

1 RFX
2 BTX



DW 180

1/1 RFX
2/2 BTX
3/2 BTX IM
2/1 DTX
3/1 DTX IM



DW 210

1/1 RFX
2/2 BTX
3/2 BTX IM
2/1 DTX
3/1 DTX IM

For dimensions, please see page 23

BBQ
& OUTDOOR KITCHENS



Full range

Icemaker modules form a guaranteed mechanical, simple concept ice making system. Available for connection to the water mains or for use with mineral water, via the internal tank.

Two top-loading refrigerator models with stainless steel interior (C37L, also available with freezer) or with interior in thermoformed abs (C40L).



C40L



C37L

	Volume	Net weight	Power supply
C37L	lt. 37	kg. 15	220 - 240V
C40L	lt. 40	kg. 10	220 - 240V

	Ice production	Net weight	Power supply
IM HYDRO XTP	10kg/24h	kg. 28	220 - 240V
IM CLASSIC HYDRO P	10kg/24h	kg. 26	220 - 240V
IM CLASSIC REFILL P	10kg/24h	kg. 26	220 - 240V



IM HYDRO XTP





Brushed steel door and
new dual function thermostat:
1) ice production setting;
2) ice maintenance setting



IM CLASSIC HYDRO P



IM CLASSIC REFILL P

For dimensions, please see page 24

TECHNICAL
DRAWINGS

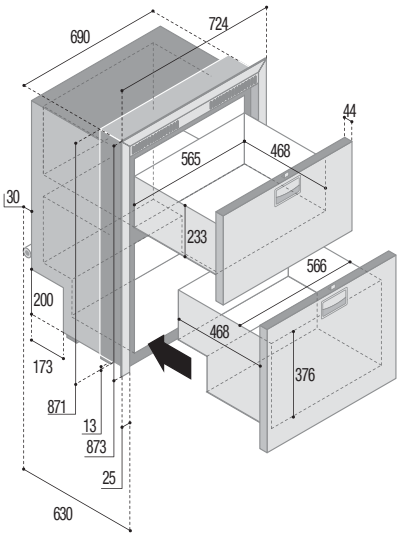

DW210

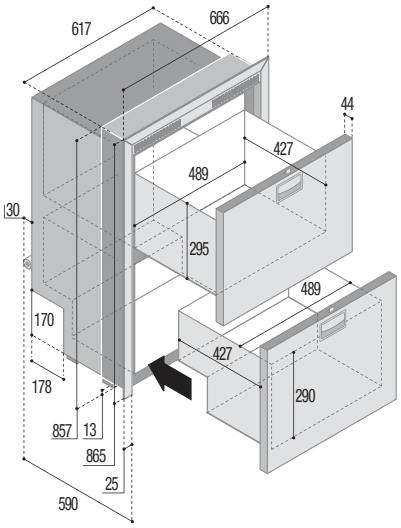

DW180

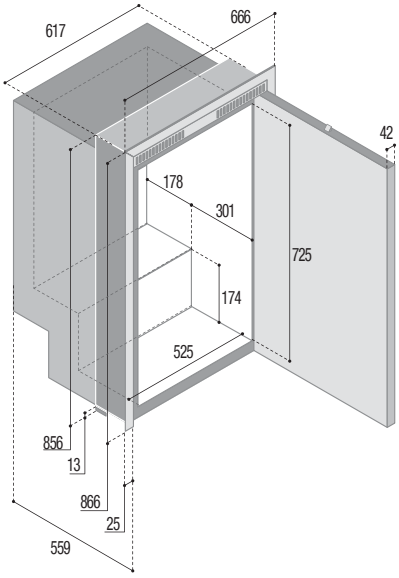

C180

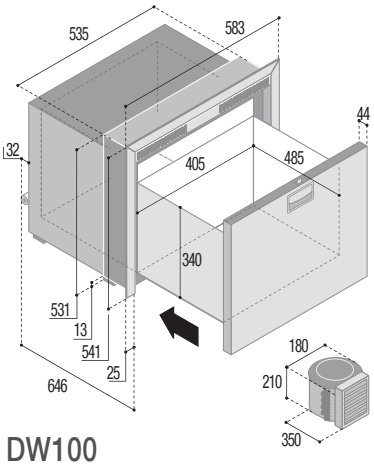

DW100

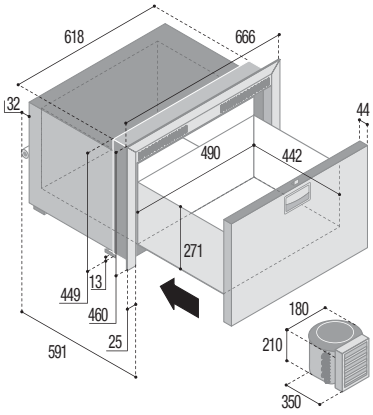

DW70

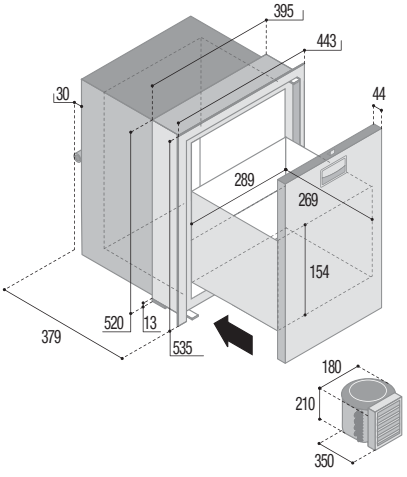

DW42

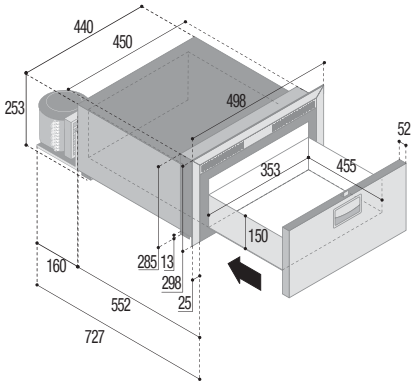

DW35





	Door Inside		Door Outside	
	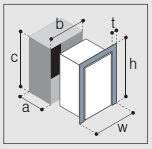		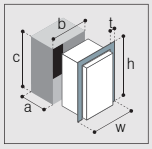	
	Mounting flange	Built-in	Mounting flange	Built-in
DW210	t: 25 w: 724 h: 873	a: 630 b: 690 c: 871	t: 18 w: 717 h: 874	a: 585 b: 691 c: 875
DW180	t: 25 w: 666 h: 865	a: 590 b: 617 c: 857	t: 18 w: 644 h: 859	a: 550 b: 618 c: 855
C180	t: 25 w: 666 h: 866	a: 559 b: 617 c: 856	t: 18 w: 644 h: 859	a: 550 b: 618 c: 855
DW100	t: 25 w: 583 h: 541	a: 646 b: 535 c: 531	t: 18 w: 562 h: 533	a: 607 b: 529 c: 530
DW70 (*)	t: 25 w: 666 h: 460	a: 590 b: 617 c: 450	t: 18 w: 644 h: 453	a: 552 b: 618 c: 449
DW42	t: 25 w: 443 h: 535	a: 379 b: 395 c: 520		
DW35	t: 25 w: 498 h: 298	a: 727 b: 498 c: 285		
IM HYDRO XTP	t: 25 w: 413 h: 523	a: 558 b: 370 c: 478		
IM CLASSIC HYDRO P	t: 25 w: 414 h: 674	a: 410 b: 370 c: 633		
IM CLASSIC REFILL P	t: 25 w: 414 h: 674	a: 410 b: 370 c: 633		

(*) DW70 BTX IM

Total depth (a)

626 mm. (door inside)
590 mm. (door outside)

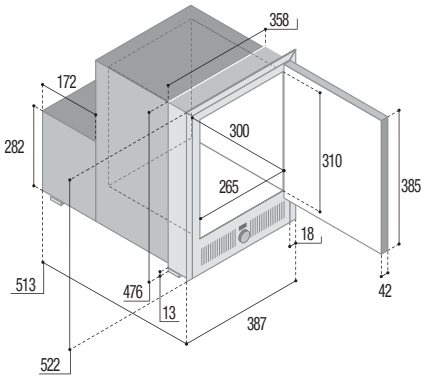

IM HYDRO XTP

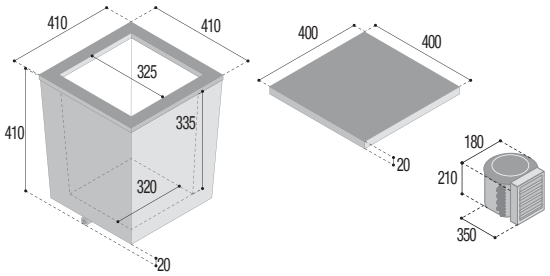

C37L

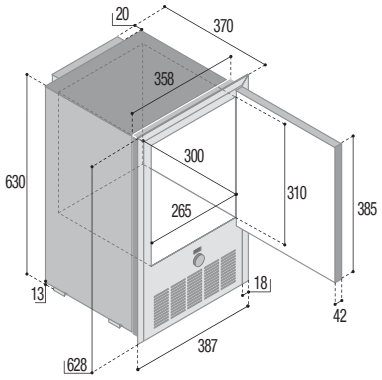

IM CLASSIC HYDRO P

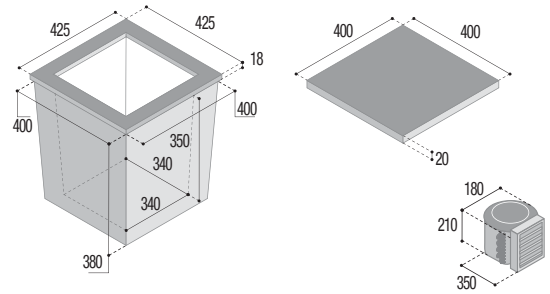

C40L

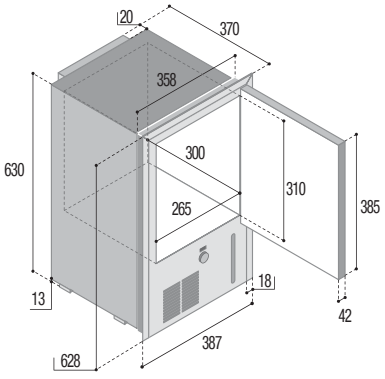

IM CLASSIC REFILL P

Vitrifrigo reserves the right to make any changes it deems fit for technical or business purposes at any time and with no prior warning.

VITRIFRIGO
COOL AND BEYOND

A MEMBER OF

VITRI ALCESTE GROUP

CTCUVF.VL Rev05_feb17

VITRIFRIGO

COOL AND BEYOND

A MEMBER OF

VITRI ALCESTE GROUP

Vitrifrigo S.r.l.

Via della Produzione, 9 - Frazione Montecchio - 61022 Vallefoglia (PU) - Italy

Tel. +39 0721 491.080 - Fax +39 0721 497.739

www.vitrifrigo.com - info@vitrifrigo.com