

ELETTRICO
ELECTRIC
ELECTRIQUE
ELEKTRISCHE
ELECTRICO

GAS
GASBACK
GAZ

CON FORNO
WITH OVEN
AVEC FOUR
MIT OFEN
CON HORNO

CON ARMADIO
WITH CABINET
AVEC CABINET
MIT SCHRANK
CON GABINETE

Apach

APTG-77PL (R)

The information and images above are considered not binding. The manufacturer reserves the right to make changes at any time without notice.

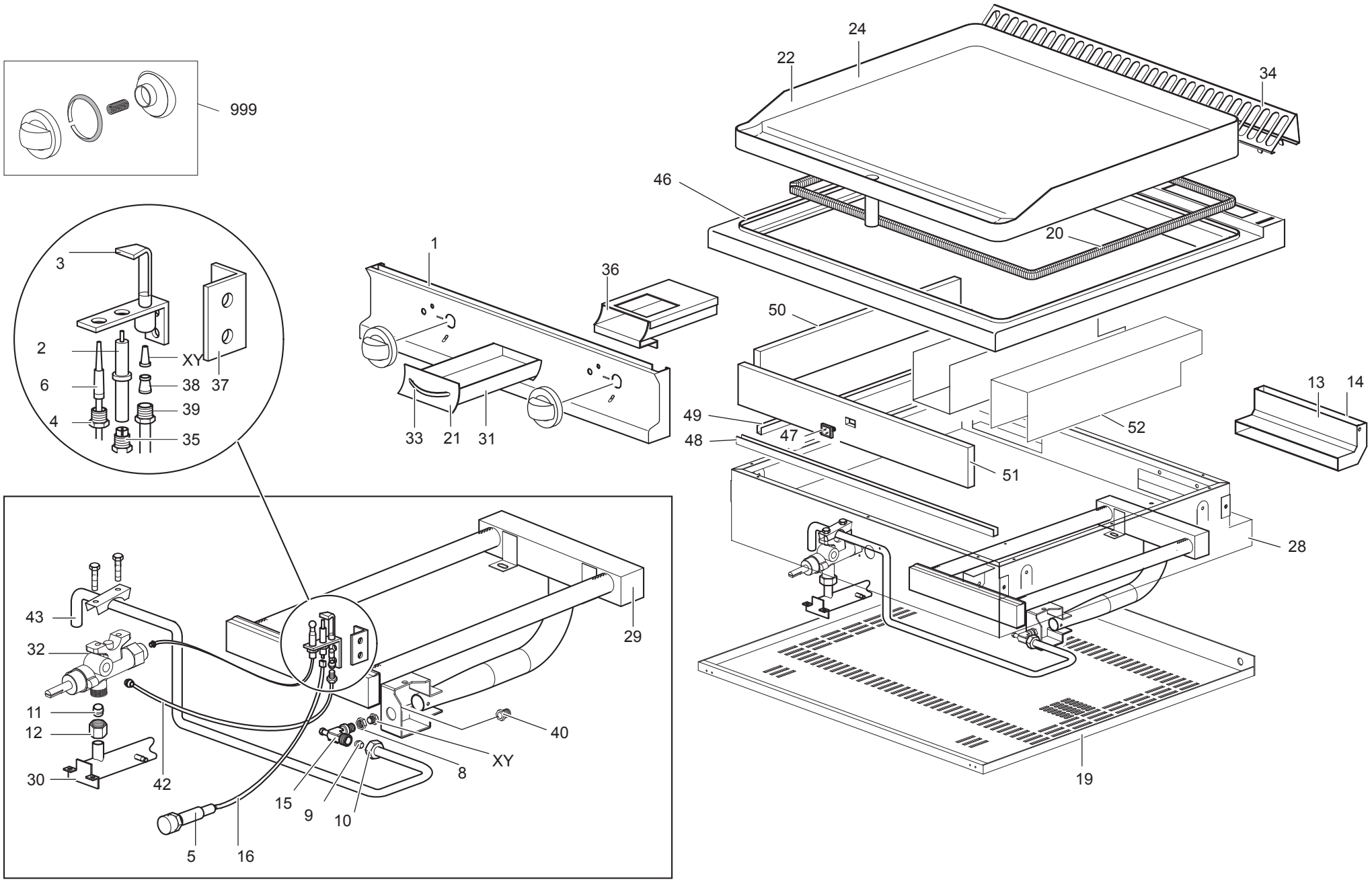

APACH APTG-77PL (R)

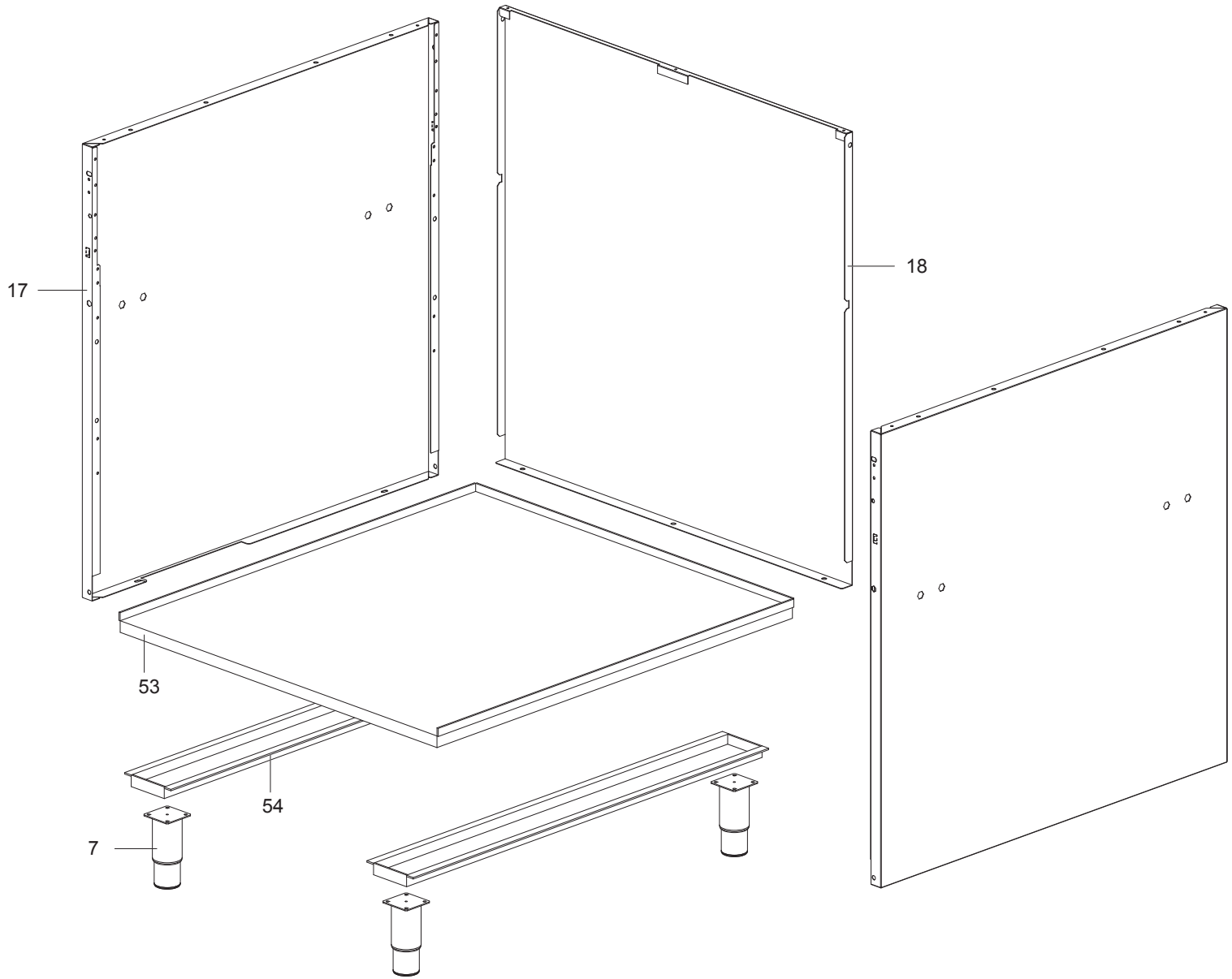

APACH APTG-77PL (R)

APTG-77PL PR PLR PLC

= Ricambi consigliati - Recommended spare parts

TAVOLA	POS.	CODICE	ITALIANO	FRANCESE	INGLESE	TEDESCO
TAV.700-110/115	1	174994	CRUSCOTTO GFT777	PANNEAU DE CONTRÔLE GFT777	CONTROL PANEL GFT777	STIRNBRETT GFT777
TAV.700-110/115	2	RTCP800033	CANDELETTA G100	ELECTRODE ALLUMAGE	SPARK PLUG	ZÜNDKERZE
TAV.700-110/115	3	RTCP800034	CORPO PILOTA	VEILLEUSE	PILOT	PILOTBRENNER
TAV.700-110/115	4	RTCP800038	RACCORDO T/COPPIA	ÉCROU POUR THERMOCOUPLE	NUT FOR THERMOELEMENT	THERMOELEMENTANSCHLUSS
TAV.700-110/115	5	RIC0004096	ACCENSIONE PIEZO	ALLUMAGE PIEZO	PIEZO LIGHTING	PIEZOELEKTRISCHER ANZÜNDER
TAV.700-110/115	6	RTCU700296	T/COPPIA	THERMOCOUPLE	THERMOCOUPLE	THERMOELEMENT
TAV.700-110/115	7	RTCU700277	PIEDINO	PIED	FOOT	FUSS
TAV.700-110/115	8	RTCU900005	C/DADO SUPPORTO INIETTORE	C/ECROU SUPPORT INJECTEUR	C/NUT INJECTOR SUPPORT	C/MUTTER EINSPRITZHALTERUNG
TAV.700-110/115	9	RTCU900012	BICONO D.10	BICONE D.10	BICONE D.10	ZWEIKEGEL D.10
TAV.700-110/115	10	RTCU900013	CALOTTA D.10	ECROU D.10	NUT D.10	MUTTER D.10
TAV.700-110/115	11	RTCU900018	BICONO D.6	BICONE D.6	BICONE D.6	ZWEIKEGEL D.6
TAV.700-110/115	12	RTCU900019	CALOTTA D.6	ECROU D.6	NUT D.6	MUTTER D.6
TAV.700-110/115	13	167270	PARETE ANTERIORE CAMINO	PAROI AVANT CHEMINÉE	FLUE FRONT WALL	VONDERWAND
TAV.700-110/115	14	167269	PARETE POSTERIORE CAMINO	PAROI ARRIÈRE CHEMINÉE	FLUE REAR WALL	RÜCKWAND
TAV.700-110/115	15	RTCU900337	SUPPORTO INIETTORE	SUPPORT INJECTEUR	INJECTOR SUPPORT	EINSPRITZHALTERUNG
TAV.700-110/115	16	RTCU900384	CAVO ACCENSIONE	CABLE D'ALLUMAGE	LIGHTING CABLE	ZÜNDKABEL
TAV.700-110/115	17	173523	FIANCO	CÔTÉ	SIDE	SEITE
TAV.700-110/115	18	167252	POSTERIORE	PANNEAU POSTÉRIEURE	BACK PANEL	RÜCKWAND
TAV.700-110/115	19	169187	FONDO TOP	FOND TOP	BOTTOM TOP	UNTERE EBENE TOP
TAV.700-110/115	20	163291	ISOLANTE TRECCIA	GARNITURE	JOINT	ISOLIERPROFIL
TAV.700-110/115	21	174999	PANNELLO CASSETTO OLIO	PANNEAU TIROIR HUILE	OIL TRAY PANEL	TAFEL ÖLKASTEN
TAV.700-110/115	22	180121	PIANO COTT. LISCIO	PLAN DE CUISSON LISSE	FLAT COOKING PLANE	GLATTE KOCHFLÄCHE
TAV.700-110/115	24	180124	PIANO COTT. LISCIO RIGATO	PLAN DE CUISSON LISSE ET NERVURÉ	PLAN OF COOKING SMOOTH AND RIBBED	GLATTER UND GERIPPTER KOCHPLAN
TAV.700-110/115	28	167286	CAMERA COMBUSTIONE	CHAMBRE DE COMBUSTION	COMBUSTION CHAMBER	BRENNERKAMMER
TAV.700-110/115	29	RTCU700744	BRUCIATORE GFT49	BRÛLEUR GFT49	BURNER GFT49	BRENNER GFT49
TAV.700-110/115	30	169183	RAMPA GFT	COLLECTEUR GFT	COLLECTOR GFT	SPEISERAMPE GFT
TAV.700-110/115	31	163122	CASSETTO OLIO	TIROIR HUILE	OIL TRAY	ÖLKASTEN
TAV.700-110/115	32	168005	TERMOSTATO GAS	THERMOSTAT GAZ	GAS THERMOSTAT	GAS THERMOSTAT
TAV.700-110/115	33	160270	MANIGLIA GFT49	POINGÉE GFT49	HANDLE GFT49	HANDGRIFF GFT49
TAV.700-110/115	34	167733	GRIGLIA CAM.G4S77	GRILLE POUR CHEMINÉE G2S9	CHIMNEY GRILL G2S9	SCHORNSTEINROST G2S9
TAV.700-110/115	35	RTCU900215	RACCORDO CAND. PILOTA	RACCORD POUR BOUGIE VEILLEUSE	FITTING FOR PILOT SPARK PLUG	ANSCHLUSSTÜCK
TAV.700-110/115	36	180453+180454	GUIDA INF. E SUP. CASSETTO OLIO	RAIL POUR LA CUVE HUILE	OIL TANK SLIDE WAY	ÖLBECKENFÜHRUNG
TAV.700-110/115	37	170259	SQUADRETTA PILOTA	EGUERRE POUR VILLEUSE	BRACKET TO SUPPORT PILOT	PILOTBRENNERHALTEWINKEL
TAV.700-110/115	38	RTCU800183	BICONO D.6	BICONE D.6	BICONE D.6	ZWEIKEGEL D.6
TAV.700-110/115	39	RTCU800182	CALOTTA D.10	ECROU D.6	NUT D.6	MUTTER D.6
TAV.700-110/115	40	RTCU700584	REGOLATORE ARIA	RÉGULATEUR AIR	AIR REGULATOR	LUFTREGLER
TAV.700-110/115	42	173407+173408	TUBO PILOTA SX+DX	TUBE VEILLEUSE GAUCHE	LEFT PILOT PIPE	LINKE PILOTBRENNERROHR
TAV.700-110/115	43	173405+173406	TUBO BRUCIATORE SX+DX	TUBE ALIMENTATION BRÛLEUR GAUCHE	LEFT BURNER FEEDING PIPE	LINKE BRENNERVERSORGUNGSROHR
TAV.700-110/115	46	174704+174786	AS.PLACCA G/EFT777+CAMINETTO SUP.	PLAN INOX GFT49	INOX PLANE GFT49	INOX EBENE GFT49
TAV.700-110/115	47	RTBF900054	VISORE+VET+2GUARN.509.130	JUDAS	SPY-HOLE	MONITOR
TAV.700-110/115	48	PACU700524	GUIDA GUARN.ANT.	SUPPORT	SUPPORT	HALTERUN
TAV.700-110/115	49	PACU700516	GUIDA GUARN.LAT.	SUPPORT	SUPPORT	HALTERUN
TAV.700-110/115	50	RTCU700416	PANNELLO IS.LAT.C.	PANNEAU ISOLANT	INSULATING PANEL	ISOLIERTAFEL
TAV.700-110/115	51	RTCU700418	PANNELLO IS.ANT.C.	PANNEAU ISOLANT	INSULATING PANEL	ISOLIERTAFEL
TAV.700-110/115	52	PACU701195	CONV.CALORE	CONVECTION THERMIQUE	CONVECTION HEAT	KONVEKTIONSWÄRME
TAV.700-110/115	53	167327	PI.INF.INOX	PLAN INFERIEUR	LOWER PLAN	UNTERE EBENE
TAV.700-110/115	54	166557	TRA.P/PIEDINI	TRAVERSE	CROSSBAR	QUERTRAGER
TAV.700-110/115	XY	VEDI MANUALE UGELLI	INIETTORE	INJECTEUR	INIECTOR	INSPRITZER
TAV.700-110/115	999	179345+182251+169045+169129	MAN. TERM. + ANELLO+MOLLA+GHIERA	BOUTON DU THERMOSTAT+ANNEAU	THERMOSTAT KNOB+RING	THERMOSTATKUGELGRIFF+RING
TAV.700-110/115	999	179345+182259+169045+169129	VERSIONE GAS CROMATA	BOUTON DU THERMOSTAT+ANNEAU	THERMOSTAT KNOB+RING	THERMOSTATKUGELGRIFF+RING