MEIKO
The clean solution



M-iClean – A superior dishwashing experience

The full spectrum of innovative dishwashing technology



MEIKO
The clean solution

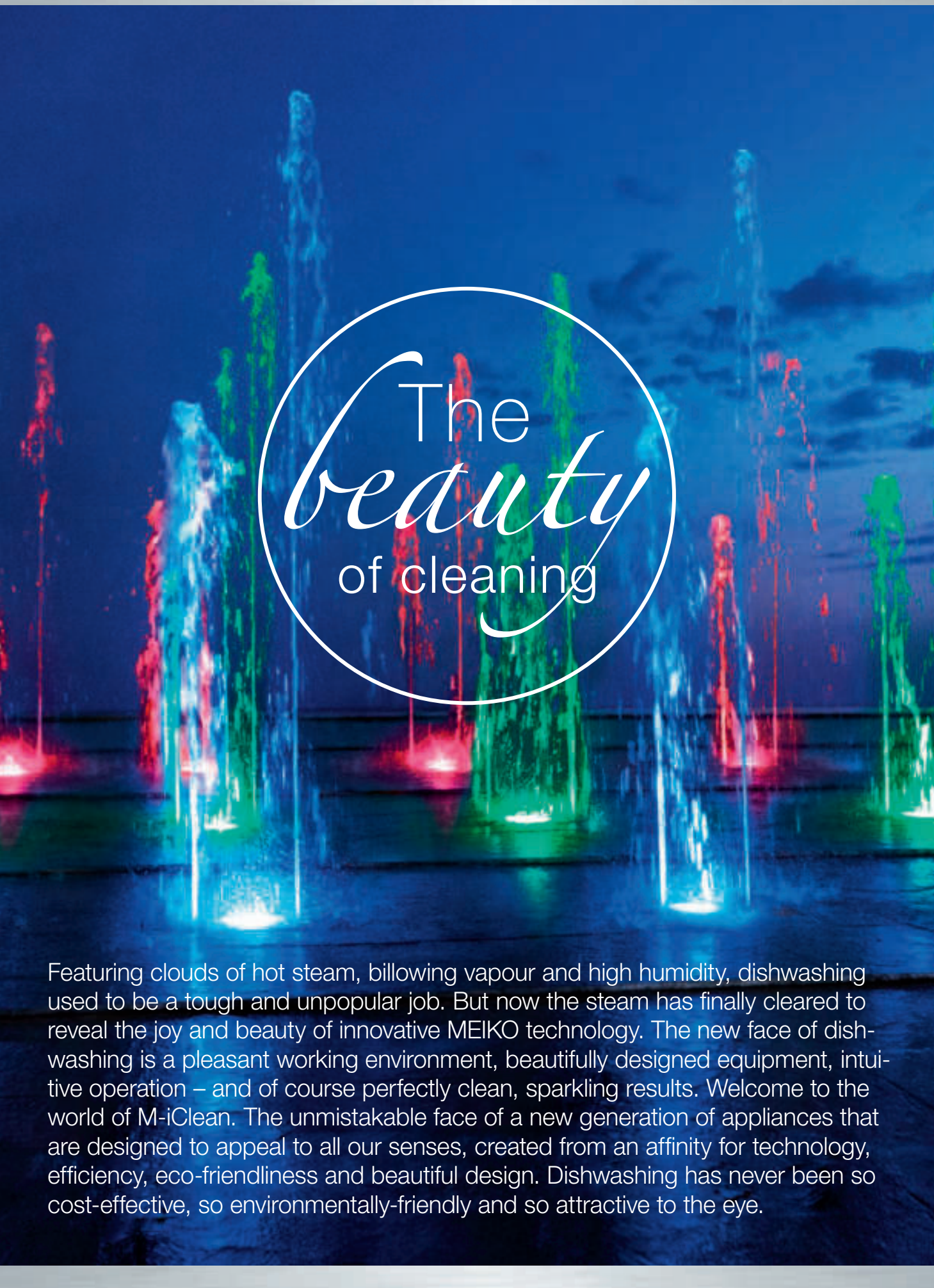

Featuring clouds of hot steam, billowing vapour and high humidity, dishwashing used to be a tough and unpopular job. But now the steam has finally cleared to reveal the joy and beauty of innovative MEIKO technology. The new face of dishwashing is a pleasant working environment, beautifully designed equipment, intuitive operation – and of course perfectly clean, sparkling results. Welcome to the world of M-iClean. The unmistakable face of a new generation of appliances that are designed to appeal to all our senses, created from an affinity for technology, efficiency, eco-friendliness and beautiful design. Dishwashing has never been so cost-effective, so environmentally-friendly and so attractive to the eye.

Outstanding results in a visually striking package

You can see at first glance that the M-iClean opens up a whole new chapter of technology and design.
From its striking LED indicator handle to its silky matt stainless steel body and bright, clearly arranged interior, the M-iClean is quite clearly in a league of its own. Innovative technology and clean lines are the order of the day, right down to the very last details.
The M-iClean also throws dishwashing into a colourful new dimension with an LED indicator handle that glows blue, green or red. The different colours provide a clear indication of the machine's status, ranging from "*Ready*" (blue) and "*Washing efficiently*" (green, pulsing) to "*Important message*" (red).
This revolutionary feature heralds an accessible and efficient dishwashing experience that combines beauty, simplicity and intelligence in one stylish package.

The LED indicator handle: A trademark feature of the M-iClean

The M-iClean catches the eye immediately thanks to its striking LED indicator handle. The handle boasts an elegant design and a smooth action and provides a useful indication of the machine's status. Always cool to the touch and remarkably satisfying to use, it gives the M-iClean a look that is entirely unique. Directly above the LED handle is the ergonomic touch display which acts as the M-iClean's control panel. All the available functions appear as clearly identifiable icons and the dynamic progress bar indicates how much of the wash cycle has been completed. Open the M-iClean's door and you are in for a sparkling treat: The LED lighting gives a great view of the machine's interior as it glitters off the bright stainless steel surfaces. M-iClean. The colourful face of a new generation of dishwashers.



M-iClean: Say goodbye to grey days

Dishwashing time just got a lot more colourful! As well as lifting people's moods and boosting motivation, the colour-coded M-iClean LED indicator also passes on important information to the machine operator.

M-iClean is ready for operation

M-iClean is washing efficiently

M-iClean has an important message



The inside view – The M-iClean keeps things clear with its brightly lit interior.




The beauty of cleaning
M-iClean – Blue efficiency

MEIKO

The clean solution

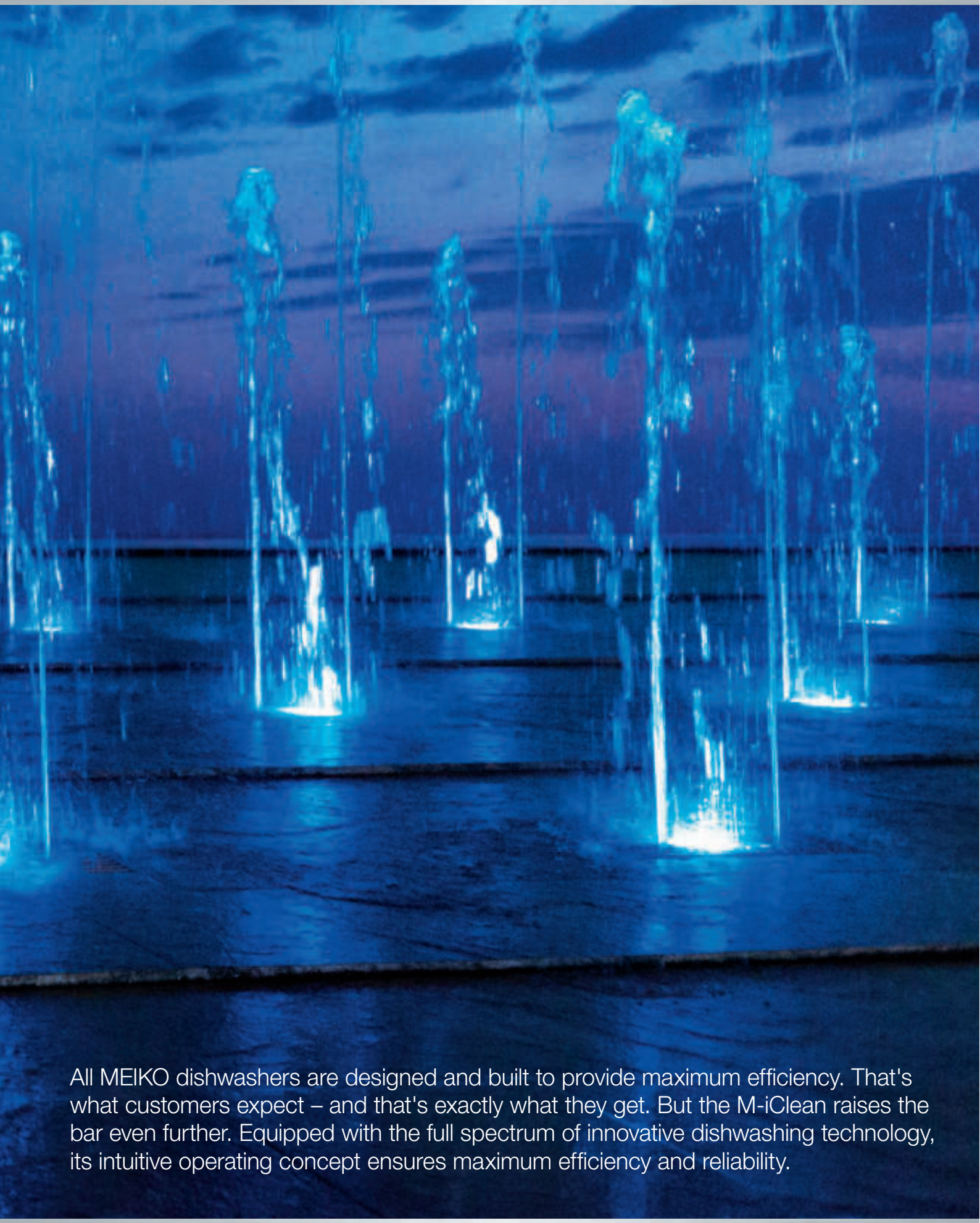

All MEIKO dishwashers are designed and built to provide maximum efficiency. That's what customers expect – and that's exactly what they get. But the M-iClean raises the bar even further. Equipped with the full spectrum of innovative dishwashing technology, its intuitive operating concept ensures maximum efficiency and reliability.

M-iClean operation: intuitive, ergonomic, logical



If only everything was this simple

Clarity is our number one priority. The M-iClean is tremendously reliable and easy to operate. And it all comes down to colours. Any part of the M-iClean that is coloured blue or illuminated in blue can be touched, operated or cleaned. This colour code prevents operator errors and accidental interruption of the wash process.
The blue-lit touch display only ever shows the exact functions that can be performed at that specific moment in time. And the dynamic blue progress bar clearly indicates how much of the programme cycle has already been completed. The blue components inside the machine, such as the practica *M-iClean filter*, are the components that can easily be checked or cleaned by the machine operator.



All the blue parts of the M-iClean are designed for user interaction of one kind or another – the *M-iClean filter* is one example.



The M-iClean touch display provides all the key information at a glance. One-touch operation makes it easy for machine operators to navigate through the programme options.





Technology and beauty go hand-in-hand

Two become one: the M-iClean uses a specially designed, stainless steel combined wash and rinse arm which harmoniously combines the machine's *Wash* and *Rinse* functions. Benefits of the combined system:

- Zero risk of arms obstructing each other
- Made from durable and robust material
- Very easy to clean

As well as being more efficient, the combined wash system is also more attractive and aesthetically appealing. Typical M-iClean.



All-in-one: the combined M-iClean wash and rinse arm.

Easy to clean, zero hassle

The M-iClean filter is simple to remove and clean – one smooth pull is all the effort required for reliable dirt removal and user-friendly cleaning! Of course the fact that it's blue clearly tells you "I'm part of MEIKO's blue operating concept. You can take me out, clean me and pop me back in. Just like that!" And for extra peace of mind, the M-iClean automatically checks that you've put everything back in the right place.



Easy to pop out, simple to clean: the M-iClean filter.



A clean solution:
the practical M-iClean filter.


The beauty of cleaning
M-iClean – The green heart of dishwashing technology

MEIKO
The clean solution



All modern-day machines should have a green heart beating inside them – clean operation using minimal resources is the order of the day! Our engineers have taken this important lesson to heart in the truest sense of the word. The M-iClean uses considerably less water, energy and detergent and boasts a sustainable design based on durable materials. That means more stainless steel and less plastic.
The M-iClean. Designed for "green cleaning".

Green Power!



Smart ways to save resources

Life isn't just black and white, there are so many graduations in between – and that's the principle behind M-iClean technology, too. The M-iClean uses an intelligent energy management system to gradually shift its functions into standby mode when it's idle. This scale of standby levels means you use less electricity. By having a progressive series of power-saving modes instead of just one standby status, the M-iClean demonstrates the power of progress through smart engineering.



Maximum cleanliness down to the very last corner with an optimal use of resources.

Making the best use of water and energy

The M-iClean filter is a great system for removing dirt – and it hugely reduces the amount of detergent and fresh water the machine uses. The M-iClean wash programmes are designed with users in mind, offering the best mix of cleanliness and cost-effectiveness. This is green cleaning in action – and the results are outstanding.

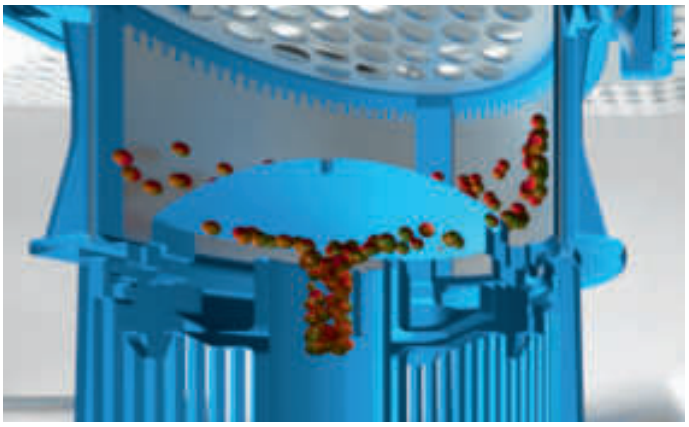

Keeping things perfectly clear: the M-iClean filter.





The M-iClean uses as much stainless steel as possible to ensure maximum reliability – the dosing pipes are just one example.


MEIKO
READY FOR OPERATION

Not just hot air – our innovative heat recovery system leaves nothing to waste!

Energy and water are the key ingredients to achieve sparkling results. Intelligent MEIKO technology recovers valuable heat using the *M-iClean AirConcept* system. Instead of being released into the room, the hot steam is fed back into the machine as part of the heat recovery process. This significantly improves the indoor climate in the washing-up area and makes the task of emptying the machine far more pleasant. By channelling the hot air back into the water circuit as a source of energy, the M-iClean achieves significant energy and cost savings – and it even gets the dishware dry quicker.

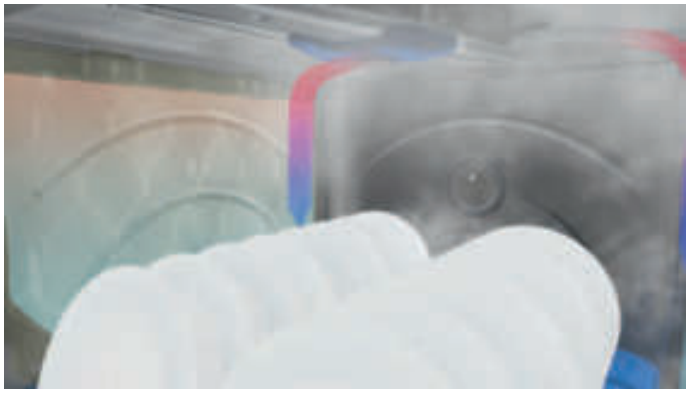

Recovering energy from hot air– the M-iClean's AirConcept solution.

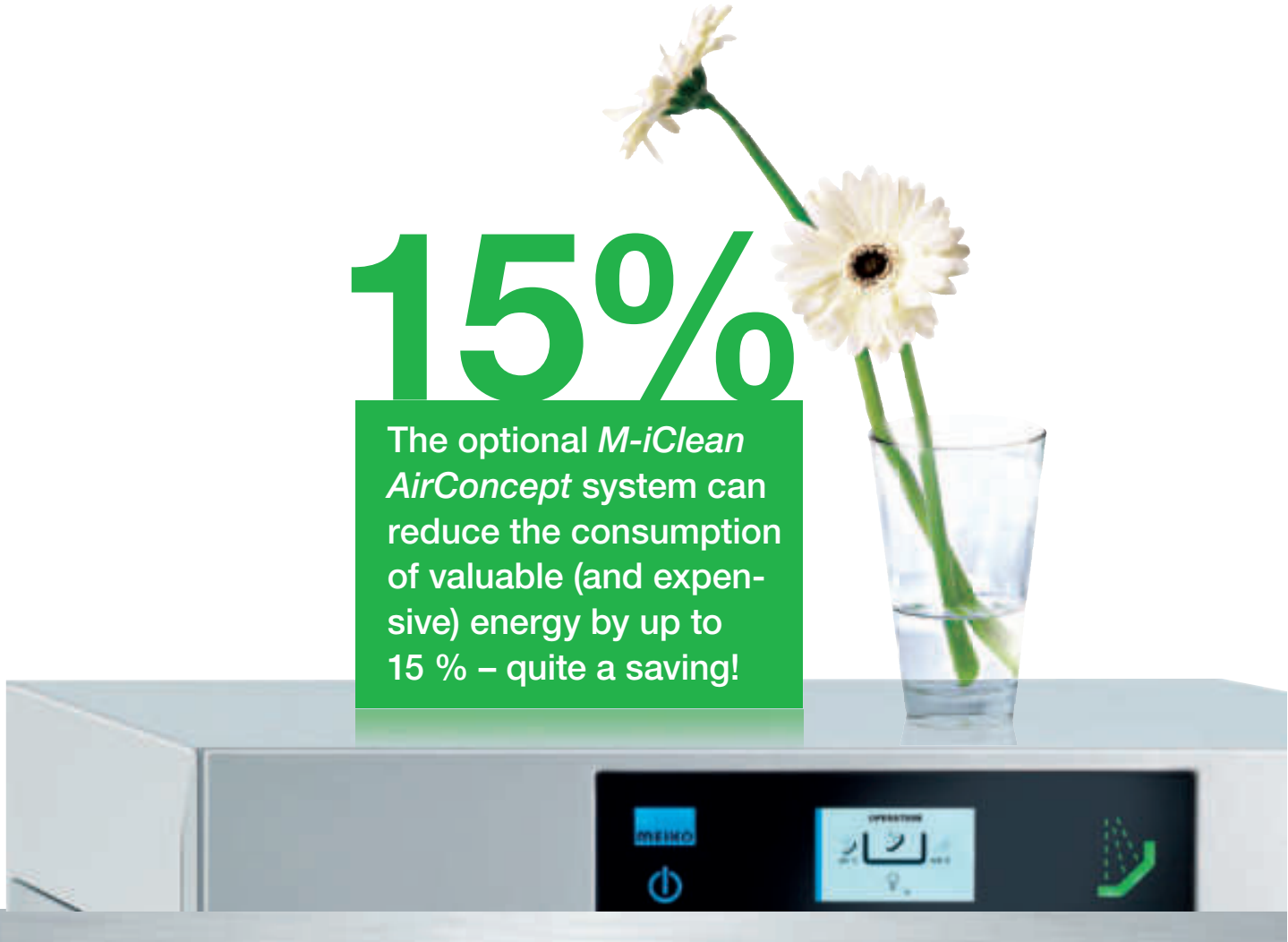

15%

The optional *M-iClean AirConcept* system can reduce the consumption of valuable (and expensive) energy by up to 15 % – quite a saving!



The *GiO MODULE* can be integrated in whatever way is most convenient – beneath or at the rear of the machine, or simply positioned to one side.

Only GiO gets water really clean

MEIKO developed its GiO technology as a more efficient way of purifying water before the wash cycle. It works according to the principle of integrated reverse osmosis, a process that only allows pure water molecules to pass through the micro-fine filter membrane. With the GiO system you can be sure that the M-iClean is rinsing with the cleanest possible water – a clean solution from MEIKO. The optional *GiO MODULE* for the M-iClean can be placed beneath, at the rear, or simply to one side of the machine, enabling you to save space and tailor the installation to the specific layout of your wash-up area. The results are striking: brilliantly clean washware, a compact footprint, fewer breakages – and of course the reassurance of perfect hygiene.

The best in dishwashing quality and efficiency

Our many years of experience have shown us that the best results in terms of both cleanliness and costs are achieved using the latest reverse osmosis technology:

- superb cleaning results
- no lime-scale deposits on the washware
- no risk of machine breakdowns and defects due to lime-scale deposits
- longer maintenance intervals
- lower consumption of detergent and rinse aid
- more eco-friendly thanks to reduced load on sewage system
- more cost-effective thanks to the elimination of manual polishing of glass and cutlery after washing plus fewer breakages
- compact dimensions
- includes full connection kit
- fully integrated in the dishwasher control system

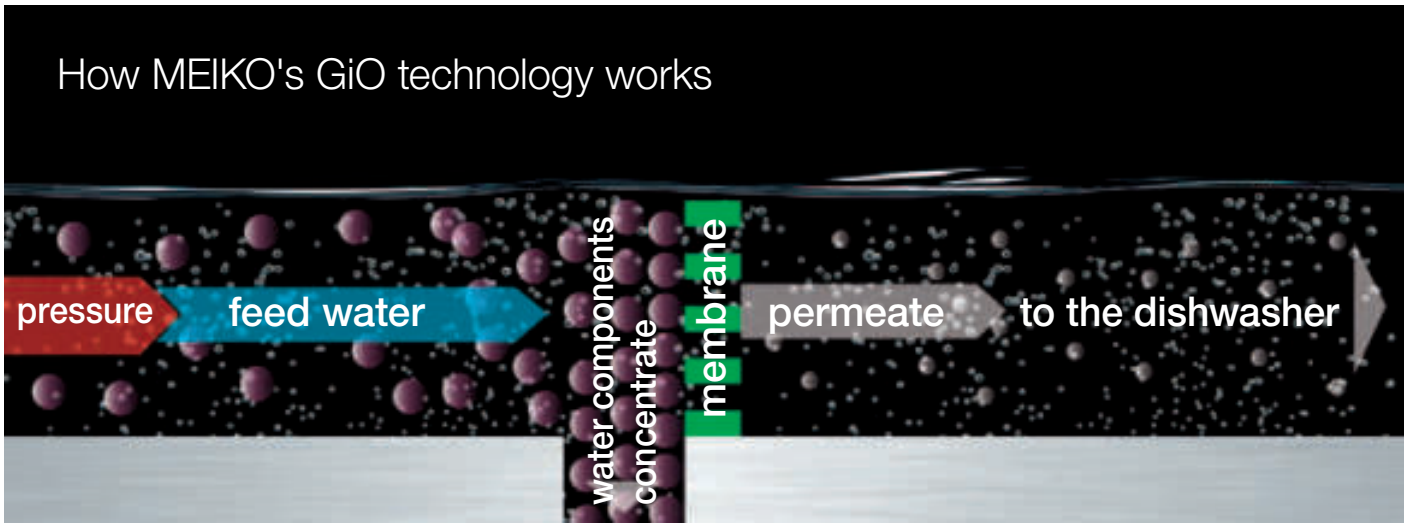


The beauty of cleaning
M-iClean – Everything under control!

MEIKO
The clean solution



If the LED handle on the M-iClean is illuminated in red, that means something unexpected has occurred in the wash cycle. That could have a number of different causes – so the touch display gives you the exact information you need to identify the problem. With its intelligent sensor technology, automatic monitoring of the filter and programme status, and crystal-clear servicing instructions, the M-iClean stays on top of every situation and gives you the reassuring feeling that everything is under control.

Intelligent function monitoring

The M-iClean uses the indicator colour *Red* to pass on important messages and information about servicing and maintenance. The M-iClean is specifically designed to be easy to maintain, so faults or malfunctions can generally be remedied by the operator. For example, the drain pump is easily accessible from inside the machine, making it simple to remove any foreign objects. The leakage detection system reliably detects any leaks that may occur, and the wash arm and filter monitoring system displays clear information to the user on the touch display in the event of any problems in this area. Nobody is perfect, but the M-iClean knows how to cope when things don't go to plan.

Vigilant monitoring and easy maintenance







Smart features: The wash system and filter are the two key components of the M-iClean. Intelligent monitoring by sensors ensures that the machine keeps a close eye on these vital components at all times. Have they been slotted back into place correctly? Is the wash arm rotating properly? The M-iClean constantly checks that everything is in order.



Pump OK: You can access the M-iClean's drain pump from inside the machine. That makes it easy to remove anything that shouldn't be there so the wash cycle can continue as quickly as possible.



Clear connections: The decision to use stainless steel for all the supply lines minimises wear, making the M-iClean more robust and durable.



Simple data exchange: The M-iClean's Bluetooth interface makes it easy to transmit service data. This ensures maximum availability, letting the M-iClean focus on the dishwashing work it was built for. You can't get more sustainable than that.

We've got you covered

MEIKO's professional and comprehensive after-sales service means you get to enjoy hassle-free dishwashing. Our extensive service network means that rapid assistance is never far away, whether you need spare parts delivered or a new part fitted.

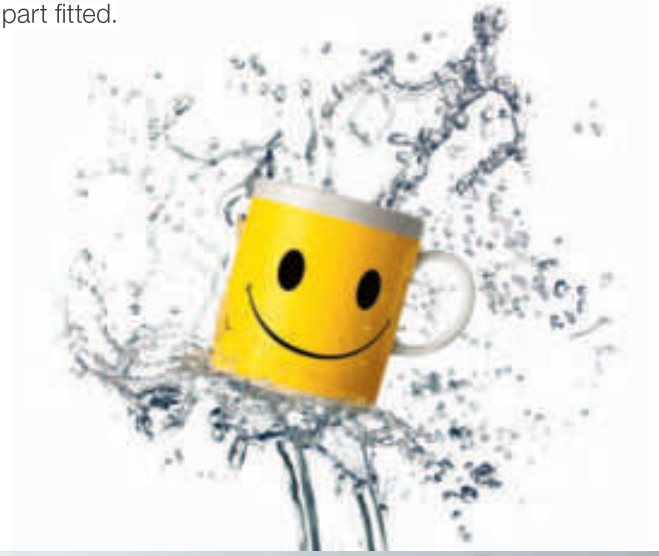

Unbeatable versatility



Sparkling clean glasses –
no need for polishing



Perfectly clean dishware



Baker's delight – also
accommodates large trays



The right choice for butchers

The clean solution

The M-iClean offers the full spectrum of innovative dishwashing technology, from intuitive operation and efficient '*green cleaning*' with minimal resource consumption right through to smart, automatic function monitoring systems. But that's not all. The M-iClean is also unbeatably versatile and flexible, offering an optimal dishwashing experience for each and every situation. From the hotel, catering and restaurant trade to butchers and bakeries, the M-iClean stands out in just about any setting, producing truly outstanding results. M-iClean. The beauty of cleaning.



Café convenience: Everything in one basket – and all perfectly clean



All-round versatility – perfect for bulky items



Sparkling clean cutlery



Your M-iClean is ready and waiting!

Ideal size, perfect performance

M-iClean US



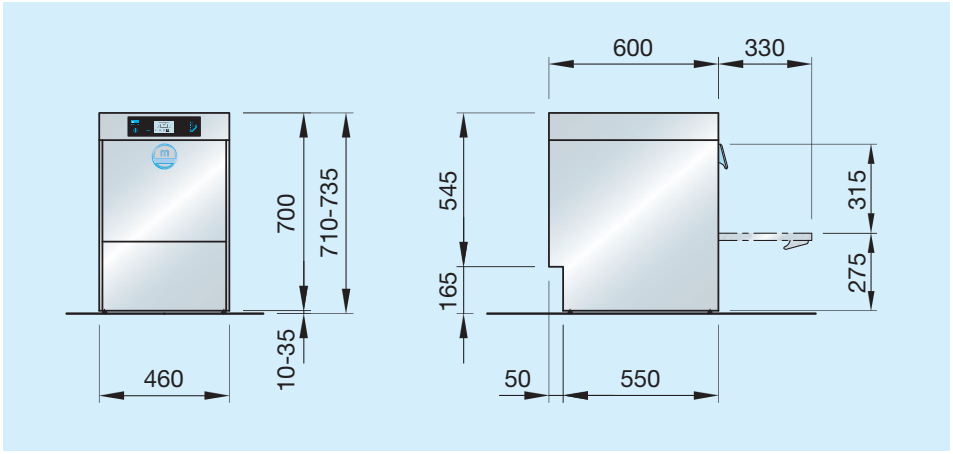

M-iClean UM



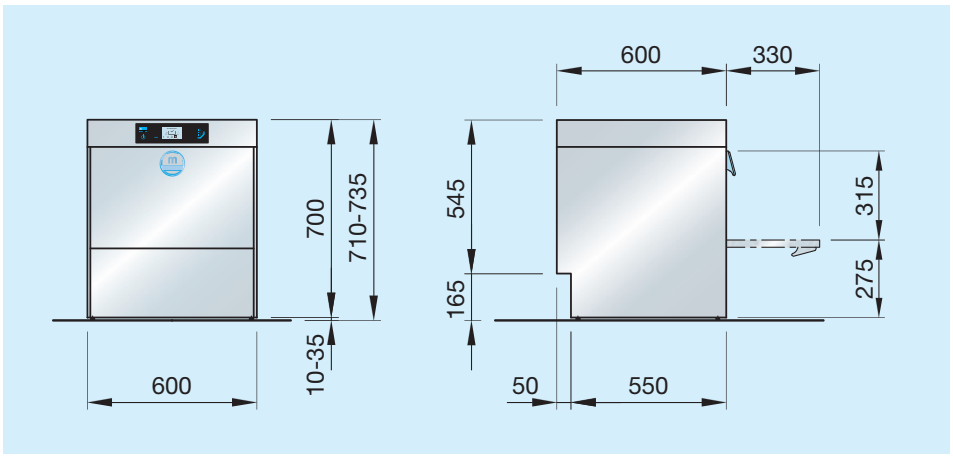

M-iClean UM+



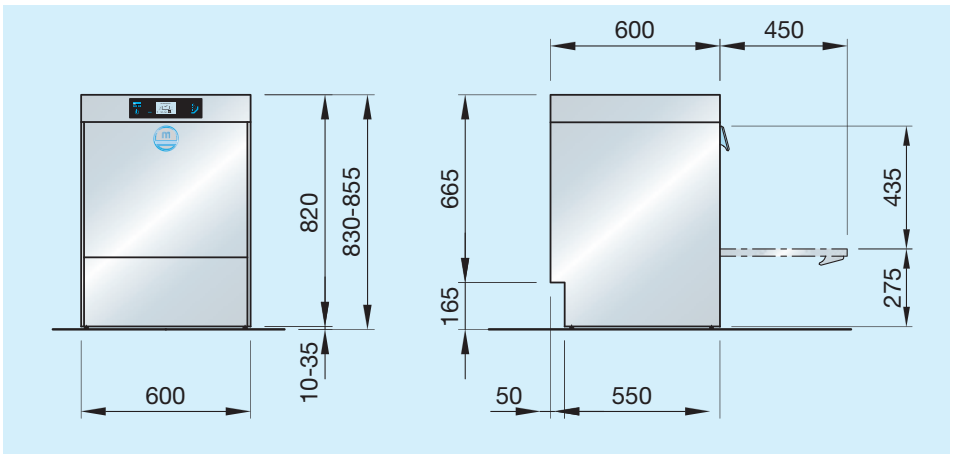

M-iClean UL



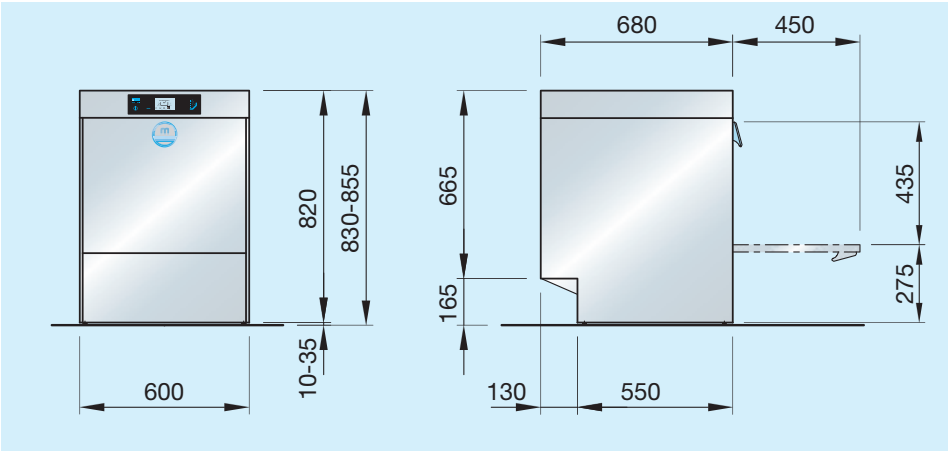

M-iClean Electrical and water connections

Electrical installation:
Electrical connection: 3-phase NPE, 400 V, 50 Hz; can be converted to alternating current on site (1 NPE, 230 V, 50 Hz). 16 amp fuse.

Water installation:
The machines can be connected directly to the fresh water supply without the use of intermediate safety valves. Minimum flow pressure 0.6 bar, maximum 5 bar. The fresh water connection must be installed in accordance with the regulations applicable in your region (e.g. Germany DIN 1988/ EN 1717). Drain hose DN 22. Max. height of on-site drain outlet on wall: 700 mm. Length of connecting cables from machine is approx. 1.6 m.

***GiO MODULE* (all models):**
Cold water connection (max. 35 °C), minimum flow pressure 1 bar, maximum 5 bar.
Conductivity of raw water <1000 µS/cm. Total water hardness max. 28 °dH.
Connection kit:
Reinforced hose (1 m), stop valve, pressure reducer, 10 µm filter with activated carbon, reinforced hose (2 m) to machine.
Drain kit:
Concentrate drain hose approx. 2 m, drain piping incl. isolation from mains. Type 'AA' air gap according to EN 1717.
Permeate and electrical lines between machine and separate *GiO MODULE* approx. 3 m.
When using the *GiO MODULE* the fresh water supply must be isolated from the mains in accordance with EN 1717 (optional).
(1 bar = 100 kPa) (1 °dH approx. 0.18 mmol/l $CaCO_3$)

Technical data

		US glass washer		UM glass washer		UM+ dishwasher		UL universal warewasher	
		400 V	230 V	400 V	230 V	400 V	230 V	400 V	230 V
Fuse protection		16 A		16 A		16 A		16 A	
Tank heating	kW	2.0		2.0		2.0		2.0	
Boiler heating	kW	6.0	2.0	6.0	2.0	6.0	2.0	6.0	2.0
Pump capacity	kW	0.55		0.55		0.55		0.55	
Total connected load	kW	6.8	2.8	6.8	2.8	6.8	2.8	6.8	2.8
Water consumption	l /basket	1.9		2.4		2.4		2.8	
Tank capacity	l	7.5		11.0		11.0		11.0	
Entry height	mm	315		315		435		435	
Basket dimension	mm	400 x 400		500 x 500		500 x 500		500 x 600 (500)	
Programme duration	s	90/120/180		90/120/180		90/120/180		90/120/240	
Theoretical basket capacity	baskets/h	40/30/20		40/30/20		40/30/20		40/30/15	
Programme duration (cold water)	s	90/120/180	180/180/240	90/120/180	180/180/240	90/120/180	180/180/240	90/120/240	180/180/240
Theoretical basket capacity	baskets/h	40/30/20	20/20/15	40/30/20	20/20/15	40/30/20	20/20/15	40/30/15	20/20/15

If the machine is connected to a cold water supply and/or if baskets are inserted in quick succession, the duration of the wash cycles may be increased to achieve hygienic final rinse temperatures.
Please note that activating the water change programme will increase the duration of the wash cycles.

MEIKO

The clean solution



The clean solution

In accordance with the hygiene requirements of DIN 10511-H for commercial glass-washing, DIN 10512 for commercial dishwashing and DIN 10522 for professional warewashing of reuseable boxes resp. DIN SPEC 10534.

MEIKO Maschinenbau GmbH & Co. KG
Englerstr. 3 · 77652 Offenburg · Germany
Tel. +49 (0)781 203-0 · Fax +49 (0)781 203-1121
www.meiko.de · info@meiko.de

130.020.00.01.14/GB/DD/3500

We reserve the right to amend specifications as part of our product improvement process.