

Climadiff

N°1 DES CAVES À VIN

ENTRUST YOUR WINES TO AN EXPERT

2019

The wine cabinet expert

Combining its expertise in electrical appliances and traditional wine know-how, Climadiff is the wine cabinet specialist. Currently no. 1 in France and sold by the country's leading distributors, the company draws on its unrivalled knowledge to provide high-quality and affordable wine cabinets to wine enthusiasts everywhere.

Cutting-edge technology

Offering very similar conditions to natural underground cellars, Climadiff wine cabinets bring together the latest technological innovations and well-established know-how. Exposure to light, stability and humidity... every aspect of our cabinets is designed and built to provide the perfect environment for your bottles to lie in peace.

A range catering to every budget

Climadiff has the most extensive range of wine cabinets on the market; whatever the type of cabinet you need, its size or your budget, we have a cabinet for you. Standard or Premium, small or large, we have a wide choice of models adapted to every price point.

Optimal storage for your wines

All our cabinets are designed to make the most of your storage space and the energy class. Whether you have little or a lot of rooms, Climadiff has a solution for your interior, one that will integrate cleverly into any area and hold a maximum number of bottles in any given space.

Whichever wine cabinet you choose from this catalogue, benefit from Climadiff's specialist know-how and high quality standards every time.



A PASSION FOR WINE, NATURALLY

It takes a true passion for wine to design and manufacture cabinets that let each bottle reaches its full potential. Wine should be treated with respect, from the grape to the glass. It must be handled in the best conditions so if you want it to reveal its full intensity and finesse. Motivated day in day out by passion, we are now France's leading manufacturer of wine cabinets and our products are now sold in over 30 countries.

- The five golden rules of ageing ..... p. 4
- Ageing and conservation wine cabinets ..... p. 5
- Premium polyvalent wine cabinets ..... p. 8
- Service wine cabinets ..... p. 12
- Chill and protect ..... p. 16
- Installation drawings ..... p. 17
- Wine equipment, prolong the pleasure! ..... p. 18
- Accessories ..... p. 20
- Climadiff's expertise ..... p. 22



THE FIVE GOLDEN RULES OF AGEING

A good wine cabinet must guarantee the same ideal conditions offered by the best traditional underground cellars. However, a simple appliance consisting of a refrigerator and wooden shelves or other accessories is not an adequate solution. To age the wine effectively, protect it and allow it to reach its potential, a good wine cabinet must be specially designed for this purpose and follow the 5 golden rules to the letter.


CLA310A+

A constant temperature

Ideally 12°C with the option to change the temperature and installed in a room whose temperature falls somewhere between 10°C and 14°C. In a cooler cabinet, the complex ageing process will slow down and over time the wine will contract and the ageing process will in fact stop. In higher temperatures, the opposite is true and the process will accelerate. The wine will spoil whithout attaining its true potential. More important than the temperature itself, it is vital the temperature is constant and stable - any significant or recurring fluctuations will affect the quality of the wine.

Clean and odour free

Corks can lose their effectiveness over time. To prevent odours finding their way through the cork, a good wine cabinet must provide a perfectly clean and healthy environment for the bottles. Cabinets used to store wines for extended periods should be fitted with an activated charcoal filter to let in some ventilation but not odours, and also to regulate the humidity.

A calm environment

Any vibrations, however mild, can disturb a wine. What's more, any agitation will upset the sediment inside the bottle and the particles will be stirred up in the wine. While young wines are more resistant to any movement, older wines, which are typically the most valuable, can be ruined beyond repair. A good wine cabinet should be installed in a calm and stable environment. An efficient absorption system will ensure any kind of vibration is prevented from being passed on to the bottles.

Low exposure to light

Light increases the oxidation-reduction potential of wine and accelerates the ageing process. This is why most cellaring wines are bottled in dark coloured glass. However, this precaution is not sufficient to totally avoid exposure to harmful light rays. A good wine cabinet holding wine for long periods should be fitted with a solid door to ensure the bottles are stored in total darkness.
If you opt for a glass-fronted model to store your wine, make sure it has been effectively anti-UV treated. Interior refrigerator-style lighting or any kind of fluorescent lighting should be avoided at all costs.

Good humidity

The wine's bouquet develops through a process of reduction in an oxygen-free environment, which requires the cork to be as watertight as possible. To keep the cork waterproof, the bottle should be laid down so the cork remains in contact with the wine and relative humidity should be kept above 50%. If humidity drops below this level, the cork risks drying out in which case the wine could bleed out of the neck. A humidity level at the other end of the spectrum, over 80% for instance, will not harm the wine at all but will cause the labels to peel off or rot. A good wine cabinet must be designed to ensure permanent relative humidity of between 50% and 75% and prevent any stagnant water that can produce bacteria or unpleasant odours.

AGEING AND CONSERVATION WINE CABINETS

Aimed at connoisseurs and collectors who want the very best, Climadiff's ageing and conservation wine cabinets are exclusively designed for long-term storage of your finest bottles and provide the best conditions for your wine to reach full maturity.
Climadiff's ageing and conservation wine cabinets offer the ideal environment for your wines - darkness or anti-UV treated glass door, humid, clean and vibration-free at a constant temperature, reproducing the conditions found in the ideal underground cellar.

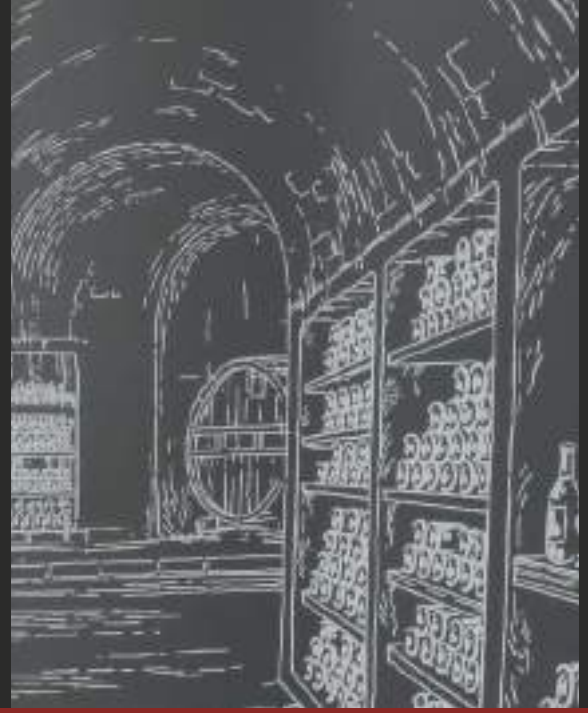



LEADING-EDGE TECHNOLOGY

- Completely stable and naturally homogeneous temperature
- An enhanced protection through the winter system which allows an adaptation to ambient climatic conditions of between 0 and 32°C
- Plain door for total darkness or anti-UV treated glass door
- Active charcoal filter to eliminate unpleasant odours
- Metal inner liner for efficient moisture regulation
- Anti-vibration system
- Shelves made from Sapele, a durable and rot-proof hardwood



Ageing wine cabinet: the long rest your wines deserve to reach full maturity.

Constant temperature, no exposure to light, excellent humidity, no vibration, clean air...

Our cabinets combine the perfect conditions to allow your wine to reach its full potential over the years!

A+ class

With its range of A+ class wine cabinets, Climadiff offers the innovative combination of excellent capacity storage and particularly high energy performance.

QUALITY MADE IN EUROPE GUARANTEE



CLA310A+
294 bottles
70 (W) x 71 (D) x 183 (H)

- Plain door
- Wine register
- Lock
- Winter system
- 4 fixed wooden PREMIUM 1/70 shelves and 1 sliding
- 70 cm shelves, high chargeability
- Temperature range of use: 12°C ± 2°C
- A+ energy class



CLA210A+
196 bottles
70 (W) x 71 (D) x 133 (H)

- Plain door
- Wine register
- Lock
- Winter system
- 3 fixed wooden PREMIUM 1/70 shelves and 1 sliding
- 70 cm shelves, high chargeability
- Temperature range of use: 12°C ± 2°C
- A+ energy class



CVP270A+
264 bottles
62 (W) x 71 (D) x 186 (H)

- Plain door
- Cellar silk-screening
- Winter system
- 4 fixed CLASSIQUE 2/62 shelves and 1 sliding
- Temperature range of use: 12°C ± 2°C
- A+ energy class



CVP220A+
216 bottles
62 (W) x 71 (D) x 162 (H)

- Plain door
- Castle silk-screening
- Winter system
- 4 fixed CLASSIQUE 2/62 shelves
- Temperature range of use: 12°C ± 2°C
- A+ energy class

A class

Climadiff's range of high-performing wine cabinets of different capacities means that you will be able to find the ideal cabinet for your collection, however much space you have.

Conservation wine cabinets with glass door

Thanks to their glass door, conservation wine cabinets allow you to connect all benefits needed for a good over time conservation of your finest bottles to an elegant design.



CV295
294 bottles
70 (W) x 71 (D) x 183 (H)

- Plain door
- Wine register
- Lock
- Winter system
- 4 fixed wooden PREMIUM 1/70 shelves
- 70 cm shelves, high chargeability
- Temperature range of use: 12°C ± 2°C
- A energy class



CVP265
264 bottles
62 (W) x 71 (D) x 186 (H)

- Plain door
- Castle silk-screening
- Winter system
- 5 fixed CLASSIQUE 2/62 shelves
- Temperature range of use: 12°C ± 2°C
- A energy class



CVP215
216 bottles
62 (W) x 71 (D) x 162 (H)

- Plain door
- Castle silk-screening
- Winter system
- 4 fixed CLASSIQUE 2/62 shelves
- Temperature range of use: 12°C ± 2°C
- A energy class



CVP180
180 bottles
62 (W) x 71 (D) x 145 (H)

- Plain door
- Castle silk-screening
- Winter system
- 4 fixed wooden PREMIUM 1/62 shelves
- Temperature range of use: 12°C ± 2°C
- A energy class



CLV122M
120 bottles*
62 (W) x 71 (D) x 107 (H)

- Plain door
- Winter system
- 2 fixed CLASSIQUE 2/62 shelves
- Temperature range of use: 12°C ± 2°C
- A energy class



CVV265
264 bottles
62 (W) x 71 (D) x 186 (H)

- Anti-UV treated glass door, black frame
- Lock
- Electromechanical regulation
- Thermometer with red electronic display
- Winter system
- 5 fixed CLASSIQUE 2/62 shelves
- Temperature range of use: 5-18°C
- B energy class

* Capacity given with 75cl Bordeaux traditional type bottles with 5 shelves.

PREMIUM POLYVALENT WINE CABINETS

For connoisseurs as well as collectors or those with just a little experience, the Premium Climadiff polyvalent cabinets, thanks to their various temperature settings, combine storage and service.
Can be used according to your needs: in a polyvalent mode for service or conservation (different temperature zones), or in an ageing or conservation mode thanks to the activation of the fan (one single temperature zone), these multi-temperature cabinets combine ageing and service cabinets advantages. Thus, you maintain the quality of your precious bottles over time while always having a stock of wines ready to enjoy at their optimal tasting temperature.



PCLV250



PCLP160

SPECIFIC TECHNOLOGICAL FEATURES

- Storage modularity thanks to the removable half metal shelf or the presentation shelf
- By activating the fan (air moving system) you homogenize the temperature inside your wine cellar. If you need different temperature zones, turn off the fan to switch to static frost
- A capacity optimized by the half metal shelf offering a vertical storage of 12 bottles of 75cl Bordeaux tradition type, convenient to keep your opened bottles
- Modular regulation by air moving system
- Wooden front with label holder for an easy identification of your bottles
- Electronic temperature regulation
- An enhanced protection through the winter system which allows an adaptation to ambient climatic conditions of between 0 and 43°C
- Active charcoal filter to eliminate unpleasant odours
- Anti-vibration system

Glass door

FLEXIBLE BETWEEN **MONO** AND **MULTI-TEMPERATURES**



PCLV250
248 bottles
59,5 (W) x 70 (D) x 188,2 (H)

- Anti-UV treated glass door, black frame
- Electronic regulation
- Thermometer with white electronic display
- Winter system
- White LED lights
- 4 fixed CLASSIQUE 1/60 shelves, 1 fixed ½ CLASSIQUE 1/60 half shelf and 1 SBV4 half metal shelf for vertical storage
- Flexible ventilation
- Temperature range of use: 5-20°C



PCLV205
204 bottles
59,5 (W) x 70 (D) x 158,8 (H)

- Anti-UV treated glass door, black frame
- Electronic regulation
- Thermometer with white electronic display
- Winter system
- White LED lights
- 3 fixed CLASSIQUE 1/60 shelves, 1 fixed ½ CLASSIQUE 1/60 half shelf and 1 SBV4 half metal shelf for vertical storage
- Flexible ventilation
- Temperature range of use: 5-20°C



PCLV160
160 bottles
59,5 (W) x 70 (D) x 129,4 (H)

- Anti-UV treated glass door, black frame
- Electronic regulation
- Thermometer with white electronic display
- Winter system
- White LED lights
- 2 fixed CLASSIQUE 1/60 shelves, 1 fixed ½ CLASSIQUE 1/60 half shelf and 1 SBV4 half metal shelf for vertical storage
- Flexible ventilation
- Temperature range of use: 5-20°C

Plain doors

A class

FLEXIBLE BETWEEN **MONO** AND **MULTI-TEMPERATURES**



PCLP250
248 bottles
59,5 (W) x 71 (D) x 188,2 (H)

- Plain door
- Cellar silk-screening
- Electronic regulation
- Thermometer with white electronic display
- Winter system
- White LED lights
- 4 fixed metal shelves, 1 fixed metal half shelf and 1 SBV4 half metal shelf for vertical storage
- Flexible ventilation
- Temperature range of use: 5-20°C
- A energy class



PCLP205
204 bottles
59,5 (W) x 71 (D) x 158,8 (H)

- Plain door
- Cellar silk-screening
- Electronic regulation
- Thermometer with white electronic display
- Winter system
- White LED lights
- 3 fixed metal shelves, 1 fixed metal half shelf and 1 SBV4 half metal shelf for vertical storage
- Flexible ventilation
- Temperature range of use: 5-20°C
- A energy class



PCLP160
160 bottles
59,5 (W) x 71 (D) x 129,4 (H)

- Plain door
- Cellar silk-screening
- Electronic regulation
- Thermometer with white electronic display
- Winter system
- White LED lights
- 2 fixed metal shelves, 1 fixed metal half shelf and 1 SBV4 half metal shelf for vertical storage
- Flexible ventilation
- Temperature range of use: 5-20°C
- A energy class



Flexible cellar as needed : polyvalent or ageing cellars.

9 or 12 sliding shelves depending on the model.

Easy storage and visibility of the labels.

Enhanced protection thanks to the winter system.

Electronic management.

NEW PROFESSIONNAL RANGE

The perfect combination of the performance of a polyvalent wine cabinet and the simplicity of bottle management. Ultra-design, these new wine cellars meet a trend of highlighting your greatest wines, thanks to its original design that displays the bottles horizontally as the professional wine cellars of the restaurants.

FLEXIBLE BETWEEN **MONO** AND **MULTI-TEMPERATURES**



PRO100
98 bottles
59,5 (W) x 70 (D) x 129,4 (H)

- Anti-UV treated glass door, black frame
- Electronic regulation
- Thermometer with white electronic display
- Winter system
- 12 sliding shelves
- White LED lights
- Flexible ventilation
- Temperature range of use: 5-20°C



PRO125
125 bottles
59,5 (W) x 70 (D) x 158,8 (H)

- Anti-UV treated glass door, black frame
- Electronic regulation
- Thermometer with white electronic display
- Winter system
- 9 sliding shelves with wooden front
- White LED lights
- Flexible ventilation
- Temperature range of use: 5-20°C



SERVICE WINE CABINETS

Climadiff launches this year a new range of free-standing installation service cellars, complete range with 3 models simple zone and 3 dual zone models. Visual harmonization of products with full glass doors, outside control panels with white digital display. These models also have flat hinges as well as wood front shelves to allow a perfect integration in your space.
Aimed at serious tasters and professionals, Climadiff's service cabinets are designed to hold a permanent selection of wines at the optimal serving temperature.


CV52IXDZ

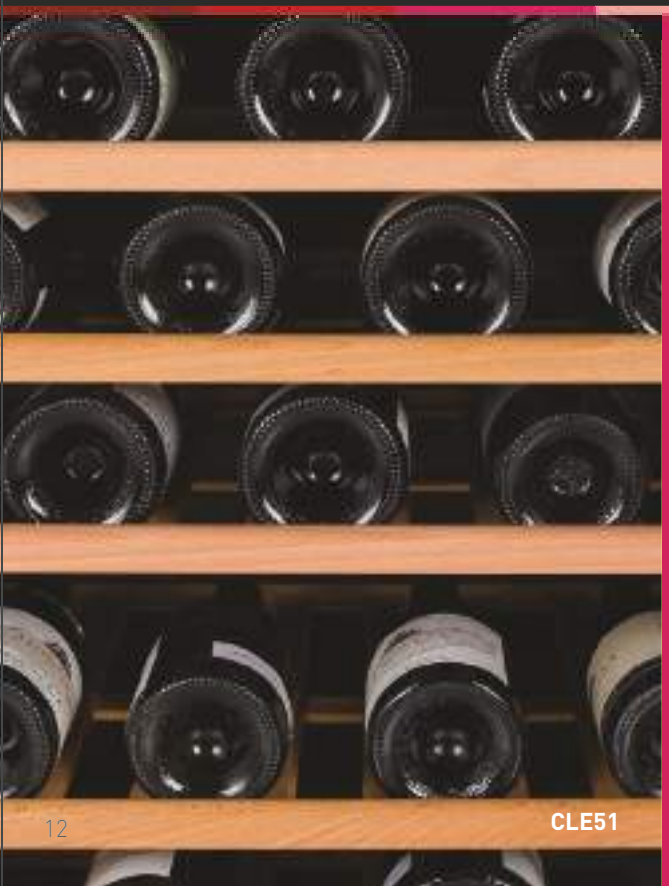
CLE51

CUTTING-EDGE TECHNOLOGY

- Up to 2 adjustable temperature compartments
- Electronic temperature regulation
- Air moving system to quickly return cabinet to chill temperature if door opened frequently
- Reversible door for all built-under counter and built-in column models
- Anti-vibration system
- Dimensions and ventilation systems adapted for built-under and built-in installations

Free standing

Double zone



CLS110MT
110 bottles
50 (W) x 54 (D) x 125,5 (H)

- Glass door
- Double compartment
- Exterior control panel with white digital display
- White LED lights
- 4 fixed metal shelves with wooden front
- Temperature range of use: 5-12°C / 12-20°C



CLS56MT
56 bottles
50 (W) x 54 (D) x 85,5 (H)

- Glass door
- Double compartment
- Exterior control panel with white digital display
- White LED lights
- 4 fixed metal shelves with wooden front
- Temperature range of use: 5-12°C / 12-20°C



CLS41MT A
41 bottles
40 (W) x 54 (D) x 85,5 (H)

- Glass door
- Double compartment
- Exterior control panel with white digital display
- White LED lights
- 4 fixed metal shelves with wooden front
- Temperature range of use: 5-12°C / 12-20°C

Single zone



CLS63 A
63 bottles
50 (W) x 54 (D) x 85,5 (H)

- Glass door
- Single compartment
- Exterior control panel with white digital display
- White LED lights
- 4 fixed metal shelves with wooden front
- Temperature range of use: 5-20°C



CLS41 A
41 bottles
40 (W) x 54 (D) x 85,5 (H)

- Glass door
- Single compartment
- Exterior control panel with white digital display
- White LED lights
- 5 fixed metal shelves with wooden front
- Temperature range of use: 5-20°C



CLS31 A
31 bottles
40 (W) x 54 (D) x 63 (H)

- Glass door
- Single compartment
- Exterior control panel with white digital display
- White LED lights
- 3 fixed metal shelves with wooden front
- Temperature range of use: 5-20°C

Built-under counter

DOUBLE COMPARTMENT



CV52IXDZ
50 bottles
59,5 (W) x 57,1 (D) x 82/88,5 (H)

- Reversible anti-UV treated glass door, stainless steel frame
- Double compartment
- Thermometer with blue electronic display
- White LED lights
- 4 semi-sliding wooden shelves and 1 semi-sliding half shelf
- Removable aeration grill
- Temperature range of use: 5-10°C / 10-20°C



CLE51
51 bottles
59,5 (W) x 57,5 (D) x 82/88 (H)

- Reversible anti-UV treated glass door, stainless steel frame
- Single compartment
- Thermometer with blue electronic display
- Blue LED lights
- 5 fixed wooden shelves and 1 fixed wooden half shelf
- Temperature range of use: 5-22°C



CLE18
18 bottles
29,5 (W) x 57,5 (D) x 82/88 (H)

- Reversible anti-UV treated glass door, stainless steel frame
- Single compartment
- Thermometer with blue electronic display
- Blue LED lights
- 5 fixed wooden shelves and 1 fixed wooden half shelf
- Temperature range of use: 5-22°C
- A energy class

CHAMBRAGE CABINET



CLE7
22 L - 7 bottles
15 (W) x 52,7 (D) x 82,6/90,1 (H)

- Glass door, Stainless steel frame
- Mono compartment
- Built-in counter
- Thermometer with blue electronic display
- Blue LED lights
- 6 fixed metal shelves
- Temperature range of use: 9-18°C*

*This device belonging to the category 10 according to the European regulation 1060/2010, has an amplitude ranging from 14 to 18°C. However, the technical performance of the device enables a wider range to be reached.

Built-in column



CLI60

44 bottles

59 (W) x 56 (D) x 59,5 (H)

- Glass door, Stainless steel frame
- Mono compartment
- Thermometer with red electronic display
- White LED lights
- 3 wooden sliding shelves and 1 wooden sliding half shelf
- Temperature range of use: 5-20°C



CLI24

24 bottles

59,2 (W) x 55,2 (D) x 45,9 (H)

- Glass door, Stainless steel frame
- Mono compartment
- Thermometer with red electronic display
- White LED lights
- 3 fixed wooden shelves
- Temperature range of use: 5-22°C



CLI24

Service wine cabinet: the art of tasting.

- **ENSURE** the wine is served at the correct temperature to optimise all its aromas and flavours. Served too warm, the wine's alcohol will come to the fore and it will taste bitter; too cold and it can anaesthetise the palate and prevent the aromas developing.
- **POOR** the liquid into a glass with an ample, transparent chalice so you can examine its appearance, colour, fluidity and other qualities.
- **AVOID** eating or drinking anything beforehand that might taint your palate (e.g. tea, coffee, mint, tobacco).
- **GUARANTEE** a clean environment by putting out any scented candles and keep your own perfume to a minimum.

FREE STANDING SERVICE CELLARS

To serve beverages at the perfect temperature, Climadiff launches its new range of free-standing chamber cellars. Perfect for reduced congestion, this new range has 3 single zone models and 2 double zone models. These cellars are harmonious, with their large glazed area, their outside control panels with white digital display and wooden front shelves.
Fitted with a cooling system that is particularly well suited for a small number of bottles, thermoelectric semiconductors (also named the Peltier effect after the French physicist) bring wines to the ideal temperature, even if your budget is small.



DOPPIOVINO24
70 L - 24 bottles
43 (W) x 52 (D) x 74 (H)

- 2 portes vitrées
- Double compartment
- Thermometer with white electronic display
- White LED lights
- 4 fixed metal shelves with wooden front
- Temperature range of use: 8-18°C / 12-18°C*



DUOVINO18
47 L - 18 bottles
34,5 (W) x 52 (D) x 64,5 (H)

- Glass door
- Double compartment
- Thermometer with white electronic display
- White LED lights
- 4 fixed metal shelves with wooden front
- Temperature range of use: 8-18°C / 12-18°C*



CLS28H
74 L - 28 bottles
43 (W) x 52 (D) x 74 (H)

- Glass door
- Mono compartment
- Thermometer with white electronic display
- White LED lights
- 6 fixed metal shelves with wooden front
- Temperature range of use: 12-18°C*



CLS16H
40 L - 16 bottles
43 (W) x 48,5 (D) x 51,5 (H)

- Glass door
- Mono compartment
- Thermometer with white electronic display
- White LED lights
- 4 fixed metal shelves with wooden front
- Temperature range of use: 12-18°C*



CLS12H
33 L - 12 bottles
34,5 (W) x 51 (D) x 48 (H)

- Glass door
- Mono compartment
- Thermometer with white electronic display
- White LED lights
- 3 clayettes fixes en fil d'acier fronton bois
- Temperature range of use: 12-18°C*

*This device belonging to the category 10 according to the European regulation 1060/2010, has an amplitude ranging from 14 to 18°C. However, the technical performance of the device enables a wider range to be reached.

INSTALLATION DRAWINGS

For an easy and quick installation, you will find here all drawings for Climadiff built-under and built-in wine cellars.

CV52IXDZ

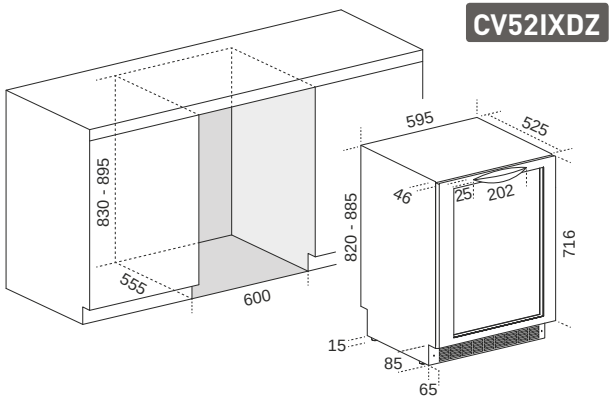

CLE51

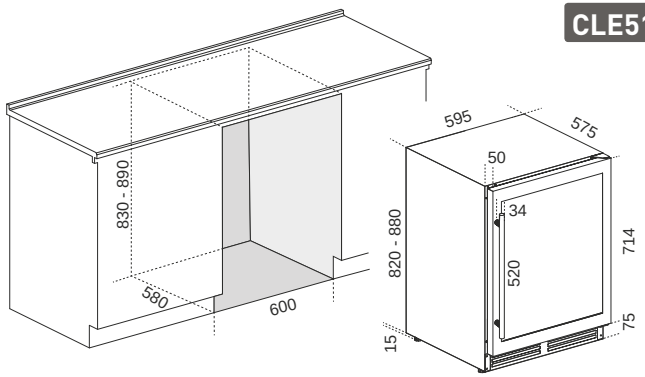

CLE18

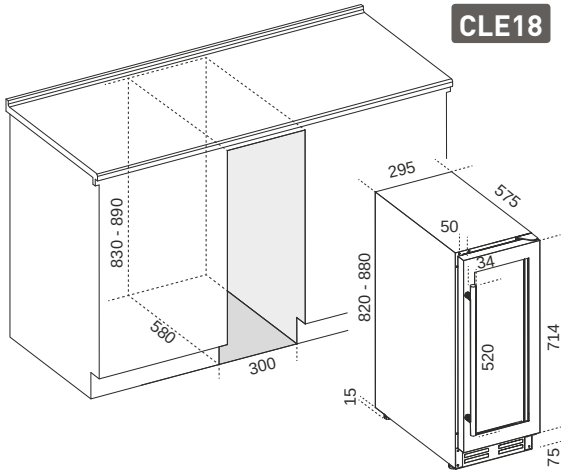

CLI60

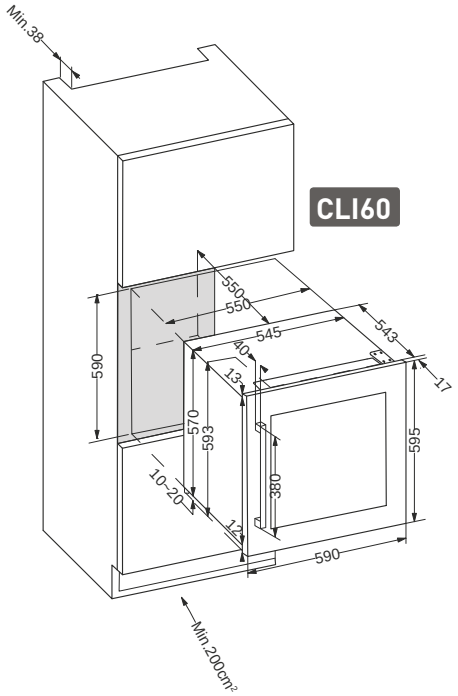

CLI24

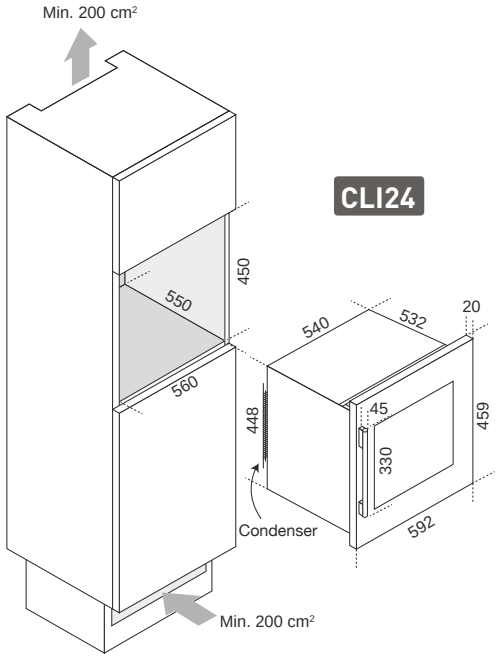

CLE7

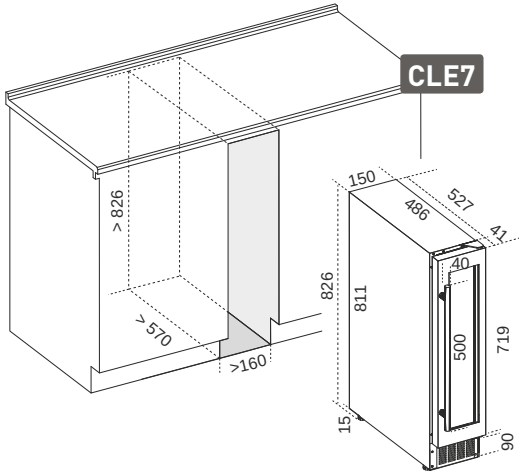

WINE EQUIPMENT, PROLONG THE PLEASURE!

PRÉSERVINO® system for wine by the glass

Discover in this coffret a full equipment to conserve your bottles of wine already opened to protect them of air oxidation. The Preservino® system protects open bottles of wine for up to 3 weeks. The inert gas Argon keeps the wine from making contact with the air and all its qualities are left intact. Ideal for the conservation of the wine from air oxidation and for the service of wine by the glass.



PKPV7



PKPV13





EVAC02

The automatic stopper

EVAC02 ensures optimum conservation of the aromas of your wine! Automatic, easy to handle and effective, it extracts only the oxygen from your opened bottles to delay the oxidation of the wine and to preserve the qualities of it much longer than if you did not replace your cork.
Rechargeable with USB port: built-in battery with an important average life expectancy. No more batteries needed.
Automatic: once the product is on the bottle, the air vacuum activates and stops itself, when there is no more oxygen to extract.
A complete kit: the pack included 2 wine stoppers with a stopper box in addition of the charge cable.



Wine thermometer

The wine thermometer is the perfect accessory to make sure your wine will be served at the optimum temperature to appreciate its true value!



THERM5

Electric corkscrews

2-in-1 corkscrew

- A modern object for any kitchen
- Integrated infrared thermometer
- Removable capsule cutter



TB5035

Universal corkscrew

- Easily extract all types of corks
- Removable capsule cutter



TB5030



TB5029



Sommelier kits

These sets contain all the essential accessories for serving and preserving your bottles. Ideal gift for wine lovers!

PACK8

- An electronic corkscrew, rechargeable with its charging base
- A USB adapter
- A wine decanter
- An air vacuum pump
- An antidrop necklace
- A capsule cutter



PACK6

- An automatic corkscrew, rechargeable with its charging base
- An air vacuum pump
- A capsule cutter
- A bottle digital thermometer
- An antidrop necklace
- A pourer





ECHANSON2

Bottles chillers

Cooler with temperatures library



ECHANSON2

This bottle cooler is the ideal solution to put your wine bottles or champagne bottles at temperature. Thanks to its wide preset temperatures library, you could select the cooling temperature depending on your wine and thus taste your win in the best conditions.

- Peltier system (thermoelectric)
- More than 30 temperatures from 18 to 5°C already preset
- Automatic maintain of the preset temperature
- Illuminated window to highlight the label

Cooler with temperatures library



VINICAVE

This bottle cooler is the ideal solution to put your wine bottles or champagne bottles at temperature (up to 8,5 cm in diameter). Thanks to its wide preset temperatures library, you could quickly and easily select the cooling temperature depending on your wine.

- Peltier system (thermoelectric)
- More than 30 temperatures from 18 to 6°C already preset
- Automatic maintain of the preset temperature
- Touchscreen and electronic display

ACCESSORIES

Climadiff offers you various accessories to maintain and complete your cabinet according to your own needs: shelves, charcoal filters, lava stones, thermometer-hygrometer, etc.
Made from solid Sapele, a durable and rot-proof hardwood, or from stainless metal, the shelves let you personalise the interior layout of your cabinet to your exact needs.



COLLECTOR 1/62 or 1/70
Bordeaux/Burgundy reversible wooden shelf



PREMIUM 1/62 or 1/70
Solid wooden shelf



PRESENTATION62 or PRESENTATION70
Wooden presentation kit adaptable with PREMIUM 1/62 or PREMIUM 1/70, sold without basic shelf



SBV4
Demi-plaque métallique pour un stockage vertical jusqu'à 12 bouteilles de 75cl type Bordeaux tradition



CLASSIQUE 2/62
Metal shelf, black wooden front



CLASSIQUE 1/60
Metal shelf, wooden front



1/2 CLASSIQUE 1/60
Metal half shelf, wooden front



RAILV3
Sliding rails adaptable with COLLECTOR 1/62, COLLECTOR 1/70, PREMIUM 1/62, PREMIUM 1/70 or CLASSIQUE 2/62



Universal label holder CLIPOGOULO® bottle identification system

CLIPOGOULO® is a universal label holder that adapts to all bottle neck diameters of wine and / or champagne of 75 cl and magnum format. It slips on the neck of your bottle already stored in a wine cellar taking care to leave 1mm of space between the label holder and the neck to let breathe and not to alter the cap.

CLIP1 or CLIPG or CLIPB

- Available in: White (CLIP1)
  Burgundy (CLIPB)
  Charcoal grey (CLIPG)
- Sold by 10 with 10 double-sided labels







LABELS

For an easy identification of your bottles. Pack of 5 labels adaptable with PREMIUM 1/62, PREMIUM 1/70, CLASSIQUE 2/62, CLASSIQUE 1/60 or 1/2 CLASSIQUE 1/60 shelf



LAVA STONES

For hygrometry control, sold in a bag without box



FILTRE1 or FILTRE3

Pure air continuously renewed and filtered. Yearly replacement is recommended



BOX FOR LAVA STONES

For hygrometry control, sold without lava stone



THERMOMETER HYGROMETER BLTY01

For temperature and hygrometry control



REFERENCE	COMPATIBLE WINE CABINETS
COLLECTOR 1/70	CLA200M - CLA300M - CLA210A+ - CLA310A+ - CV98 - CV100 - CV196 - CV200 - CV294 - CV295 - CV297 - CV300 - CV300B
COLLECTOR 1/62	CVP120 - CVP121 - CVP142 - CVP143 - CVP168 - CVP178 - CVP180 - CLV122M - CLV179M - CLV254M - CLV267M - CVP140B - CVP190 - CVP220 - CVP220A+ - CVP215 – CVP255 - CVP265 - CVP266 - CVP270A+ - CVV142 - CVV168 - CVV265
PREMIUM 1/70	CLA200M - CLA300M - CLA210A+ - CLA310A+ - CV98 - CV100 - CV196 - CV200 - CV294 - CV295 - CV297 - CV300 - CV300B
PREMIUM 1/62	CVP120 - CVP121 - CVP142 - CVP143 - CVP168 - CVP178 - CVP180 - CLV122M - CLV179M - CLV254M - CLV267M - CVP140B - CVP190 - CVP220 - CVP220A+ - CVP215 - CVP255 - CVP265 - CVP266 - CVP270A+ - CVV142 - CVV168 - CVV265
CLASSIQUE 1/60	PCLV250 - PCLV205 - PCLV160 - PCLP250 - PCLP205 - PCLP160 - CDP159 - CDP204 - CDV159
1/2 CLASSIQUE 1/60	PCLV250 - PCLV205 - PCLV160 - PCLP250 - PCLP205 - PCLP160 - CDP159 - CDP204 - CDV159
CLASSIQUE 2/62	CVP120 - CVP121 - CVP142 - CVP143 - CVP168 - CVP178 - CVP180 - CLV122M - CLV179M - CLV254M - CLV267M - CVP140B - CVP190 - CVP220 - CVP220A+ - CVP215 - CVP255 - CVP265 - CVP266 - CVP270A+ - CVV142 - CVV168 - CVV265
SBV4	PCLV250 - PCLV205 - PCLV160 - PCLP250 - PCLP205 - PCLP160 - CLA200M - CLA300M - CLA210A+ - CLA310A+ - CV98 - CV100 - CV196 - CV200 - CV294 - CV295 - CV297 - CV300 - CV300B - CVP120 - CVP121 - CVP142 - CVP143 - CVP168 - CVP178 - CVP180 - CLV122M - CLV179M - CLV254M - CLV267M - CVP140B - CVP190 - CVP220 - CVP220A+ - CVP215 - CVP255 - CVP265 - CVP266 - CVP270A+ - CVV142 - CVV168 - CVV265
FILTRE1	Compatible with the whole ageing, conservation and polyvalent ranges (CLA, CLV, CVP, CV et CVV) except CLIMADIFF PREMIUM range
FILTRE3	PCLV250 - PCLV205 - PCLV160 - PCLP250 - PCLP205 - PCLP160

CLIMADIFF'S EXPERTISE

When choosing a wine cabinet, keep in mind that this device will be trusted with bottles that you may have patiently collected over many years and represent a cherished possession and financial investment: their total value can largely surpass the cost of the appliance itself and their value is likely to increase over time!

Resorting to cheaper products or non-specialist manufacturers whose appliances are simple refrigeration units would be a false economy and a potentially expensive risk.

By contrast, choosing a Climadiff® wine cabinet guarantees the safest ageing conditions for your bottles and the perfect tasting temperature for any occasion to share with your guests.

Quality control and standards

Climadiff is a producer that cares about quality:

- All our factories are certified,

- Our products are subjected to rigorous testing and checks meeting precise protocols:
    - Leakage checks
    - Electrical safety tests carried out on every single product
    - Operational testing carried out on every single product
    - Visual checks
    - Closure testing
    - Exposure to light
    - Hand-cleaned
    - Protective packaging

All Climadiff products meet European standars in force. Each unit has it own ID number and rating label to guarantee product traceability.



PRODUCT REFERENCE	USE	INSTALLATION	ENERGY CLASS	CAPACITY[1]	DOOR TYPE	NET WIDTH (cm)	NET DEPTH (cm)	NET HEIGHT (cm)	NET/GROSS WEIGHT (kg)	EQUIPMENTS	CODE EAN
CLA310A+	Ageing wine cellar	Free standing	A+	294	Plain	70,00	71,00	183,00	72/87	2 adjustable feet (height 4 cm) - 2 castors - Charcoal filter - White LED lights with switch button - Anti-vibration system - Winter system - Thermometer with red electronic display	3595320102604
CLA210A+	Ageing wine cellar	Free standing	A+	196	Plain	70,00	71,00	133,00	63/69	2 adjustable feet (height 4 cm) - 2 castors - Charcoal filter - White LED lights with switch button - Anti-vibration system - Winter system - Thermometer with red electronic display	3595320102611
CVP270A+	Ageing wine cellar	Free standing	A+	264	Plain	62,00	71,00	186,00	70/76	2 adjustable feet (height 4 cm) - 2 castors - Charcoal filter - Anti-vibration system - Winter system - Thermometer with red electronic display	3595320102789
CVP220A+	Ageing wine cellar	Free standing	A+	216	Plain	62,00	71,00	162,00	64/69	2 adjustable feet (height 4 cm) - 2 castors - Charcoal filter - Anti-vibration system - Winter system - Thermometer with red electronic display	3595320102772
CV295	Ageing wine cellar	Free standing	A	294	Plain	70,00	71,00	183,00	79/93	2 adjustable feet - 2 castors - Charcoal filter - LED lights - Anti-vibration system - Winter system - Thermometer with red electronic display	3595320101782
CVP265	Ageing wine cellar	Free standing	A	264	Plain	62,00	71,00	186,00	75/82	2 adjustable feet (height 4 cm) - 2 castors - Charcoal filter - Anti-vibration system - Winter system - Thermometer with red electronic display	3595321217161
CVP215	Ageing wine cellar	Free standing	A	216	Plain	62,00	71,00	162,00	64/69	2 adjustable feet (height 4 cm) - 2 castors - Charcoal filter - Anti-vibration system - Winter system	3595320102796
CVP180	Ageing wine cellar	Free standing	A	180	Plain	62,00	71,00	145,00	60/65	2 adjustable feet (height 4 cm) - 2 castors - Charcoal filter - Anti-vibration system - Winter system - Thermometer with red electronic display	3595321217154
CLV122M	Ageing wine cellar	Free standing	A	120	Plain	62,00	71,00	107,00	49/53	4 adjustable feet (height 4 cm) - Charcoal filter - Anti-vibration system - Winter system	3595320101508
CVV265	Conservation wine cellar	Free standing	B	264	Glass	62,00	71,00	186,00	81/87	2 adjustable feet (height 4 cm) - 2 castors - Charcoal filter - White LED lights with switch button - Anti-vibration system - Winter system - Thermometer with red electronic display	3595320104196
PRO100	Polyvalent or conservation wine cabinet	Free standing	C	98	Glass	59,50	70,00	129,4	59,5/64,9	2 adjustable feet (height 1.8 cm) - 2 castors - Charcoal filter - White LED lights with switch button - Anti-vibration system - Winter system - Thermometer with white electronic display	3595320105964
PRO125	Polyvalent or conservation wine cabinet	Free standing	C	125	Glass	59,50	70,00	158,8	70/76,8		3595320105971
PCLV250	Polyvalent or conservation wine cabinet	Free standing	C	248	Glass	59,50	70,00	188,20	83/90,5	2 adjustable feet (height 1.8 cm) - 2 castors - Charcoal filter - White LED lights with switch button - Anti-vibration system - Winter system - Metal half shelf for vertical storage - Thermometer with white electronic display	3595320105056
PCLV205	Polyvalent or conservation wine cabinet	Free standing	C	204	Glass	59,50	70,00	158,80	70/76,8		3595320105032
PCLV160	Polyvalent or conservation wine cabinet	Free standing	C	160	Glass	59,50	70,00	129,40	59,5/64,9		3595320105018
PCLP250	Polyvalent or ageing wine cabinet	Free standing	A	248	Plain	59,50	71,00	188,20	74/81,5		3595320105063
PCLP205	Polyvalent or ageing wine cabinet	Free standing	A	204	Plain	59,50	71,00	158,80	61,5/68,3		3595320105049
PCLP160	Polyvalent or ageing wine cabinet	Free standing	A	160	Plain	59,50	71,00	129,40	52/57,4		3595320105025
CLS110MT	Double compartment service wine cabinet	Free standing	B	110	Glass	50	54	125,5	48/50	2 adjustable feet - White LED lights with switch button - Anti-vibration system - Thermometer with white electronic display	3595320105728
CLS56MT	Double compartment service wine cabinet	Free standing	B	56	Glass	50	54	85,5	32/35		3595320105735
CLS41MT	Double compartment service wine cabinet	Free standing	A	41	Glass	40	54	85,5	31/34		3595320105759
CLS63	Single compartment service wine cabinet	Free standing	A	63	Glass	50	54	85,5	31/34		3595320105742
CLS41	Single compartment service wine cabinet	Free standing	A	41	Glass	40	54	85,5	29/32		3595320105766
CLS31	Single compartment service wine cabinet	Free standing	A	31	Glass	40	54	63	21/23		3595320105773
CV52IXDZ	Double compartment service wine cabinet	Built-in counter	B	50	Glass	59,5	57,1	82	50/54	4 adjustable feet (height 6.5 cm) - Plumbing passage - White LED lights with switch button - Anti-vibration system - Removable aeration grill - Water tray to maintain proper hygrometry - Thermometer with blue electronic display	3595320717099
CLE51	Single compartment service wine cabinet	Built-in counter	B	51	Glass	59,5	57,5	82	46/50	4 adjustable feet (height 6 cm) - Blue LED lights with switch button - Anti-vibration system - Thermometer with blue electronic display	3595320102949
CLE18	Single compartment service wine cabinet	Built-in counter	A	18	Glass	29,5	57,5	82	30/32		3595320102932
CLI60	Single compartment service wine cabinet	Built-in column	A	44	Glass	59	56	59,5	33/36	White LED lights with switch button - Anti-vibration system - Thermometer with red electronic display	3595320105797
CLI24	Single compartment service wine cabinet	Built-in column	B	24	Glass	59,2	55,2	45,9	28/32		3595320102918
DOPPIOVINO24	Double compartment chambrage cabinet	Free standing	C	24	Glass	43	52	74	19,5/23	2 adjustable feet (1.2 cm) - White LED lights with switch button - Thermometer with white electronic display	3595320105711
DUOVINO18	Double compartment chambrage cabinet	Free standing	C	18	Glass	34,50	52	64,5	14,5/16		3595320105704
CLS28H	Single compartment chambrage cabinet	Free standing	B	28	Glass	43	52	74	19,5/23		3595320105698
CLS16H	Single compartment chambrage cabinet	Free standing	C	16	Glass	43	48,5	51,5	14/16		3595320105681
CLS12H	Single compartment chambrage cabinet	Free standing	A	12	Glass	34,5	51	48	11,6/14		3595320105674
CLE7	Single compartment chambrage cabinet	Built-in counter	B	7	Glass	15	52,7	82,6	12,58/14,08	4 adjustable feet (height 7.5 cm) - Blue LED lights with switch button - Thermometer with blue electronic display	3595320104295

[1] Capacity given with 75cl Bordeaux traditional type bottles. Adding shelves reduces considerably the total capacity.

IMPRIM'VERT
www.imprimerie-numeriscann.fr numeriscann

After-sales service for your peace of mind

In addition to a wide product range and major innovations, Climadiff also boasts an excellent after-sales service to give you peace of mind using your wine cabinet.

The after-sales service is managed by our partner **Interfroid Services**. Supported by a network of over 250 contractors and partners, the team of experienced technicians at **Interfroid Services**, provides a maintenance service across France and supplies parts for our distributors worldwide.

- Parts and accessories stored in France means we can supply a new replacement component quickly.
- Our many points of sale and growing technical networks guarantee a local solution wherever you are.
- Our trained technicians and their technical expertise in cooling systems ensure clear and fast answers to your questions.

More information on www.interfroidservices.fr or by mail to savclimadiff@interfroidservices.fr.



Climadiff

143, boulevard Pierre Lefaucheux, 72230 Arnage - France

For our advice, the full range of models and accessories shop to personalize your cabinet, visit also **www.climadiff.com.**

Visit also of now our partner's shop **www.vinokado.com**; you will find there the ideal gift for wine enthusiasts.

CLIMADIFF by FRIO Entreprise is constantly improving its products and therefore cannot guarantee that product specifications will not be changed without prior notice. Consequently, there may be differences between the product features in this catalogue and the product delivered to you. We cannot be held liable for printing errors.

07/19 - Photo credits: Studio JM2 - COMERA Cuisines La Chapelle Saint-Aubin - L'Office Le Mans - Alcohol abuse is bad for your health, please consume in moderation - Non contractual photos and illustrations