Z14
MANUAL TÉCNICO
TECHNICAL MANUAL

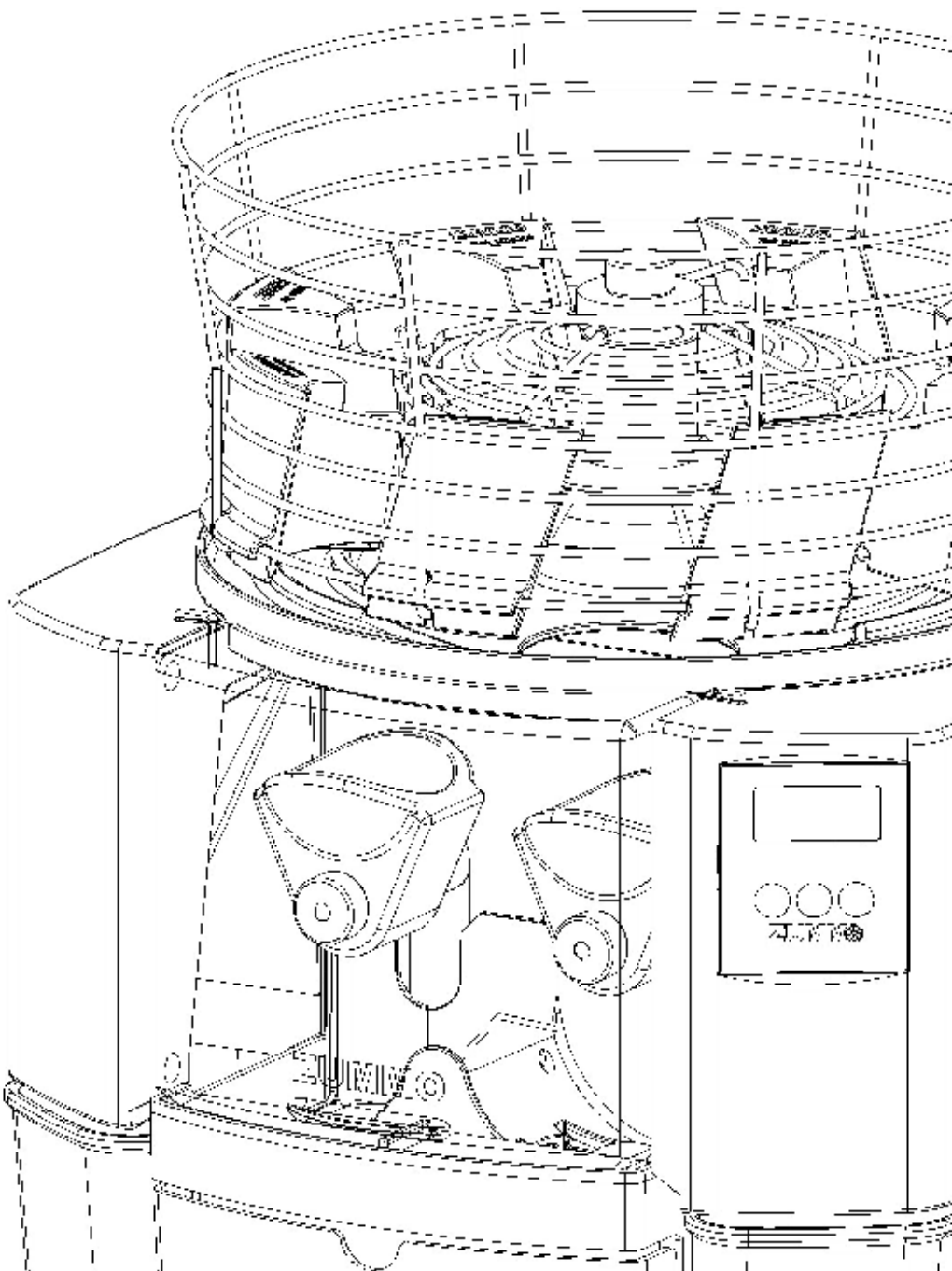

Z14 TECHNICAL INSTRUCTIONS

CONTENTS:

1.- Opening the machine
2.- Changing the bridge
3.- Checking if cleaning and greasing is needed
4.- Puller runner bolts
5.- Tray shaft additions
6.- Blade runner cover
7.- Replacing a cup runner
8.- Adjusting the position of the cups
9.- Replacing a reducer, a copier or a rod
10.- Adding a “cup runner bridge”

1. - OPENING THE MACHINE

Disconnect the appliance from the power supply.
Remove all the external parts (Fig. 1)
Remove the 4 bolts from the top and the 4 securing the front to the base
Loosen the front mounts by 2 to 3mm.
Extract the right-hand side plate top plug. (Fig. 2)



1



2

Extract the electronic circuit board by pressing with the short end of a No.5 Allen key on the circuit board tab. (Fig. 3)



3



4

N.B. Insert the short end of the key (Fig. 3), do not use punches or screwdrivers as these may damage the electronic circuit board.

Remove the board completely from the machine.
Disconnect the wires from the short micrometer. (Fig. 4)
Extract the wiring from inside the side plate.
Extract the front of the machine.

Extract the three runner covers  (to be able to work safely). (Fig. 5)



5

2.- CHANGING THE BRIDGE

Extract the top bolt from the bridge. (Fig. 6)



6



7

Extract the top pin  with the aid of a screwdriver. (Fig. 7)
Extract the pusher assembly. (Fig. 6)
Extract the bottom bolt from the bridge, thereby releasing it.
Fit the new bridge and secure it with the bottom bolt.
Apply a little thread-locking adhesive to the bolt threads.
Do not screw in fully yet.
Grease the pin and fit into position.
Fit the pusher assembly and refit the bolt. Finish tightening the whole assembly.

The cogs  will have become misaligned; to correct this:

Fit the rod  in a vertical position (a position higher than the bridge).
Extract the cogs.
Turn the shafts so that they are in the vertical cup position and then refit the cogs.

N.B. YOU SHOULD NOW CHECK THE ADJUSTMENT BETWEEN THE COGS AND THE BRIDGE.

Fit the cups and secure them with the nuts. Move the cups from side to side, checking that the movement is not greater than 1mm.

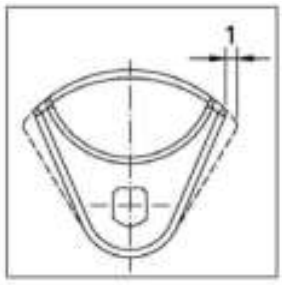

If it is greater:

- In the event of there being play (greater than 0.2mm) between the cup runner  and the bars guiding it, this play needs to be reduced. To do so, loosen the top chassis bolt corresponding to the outer bar of this runner, lower the runners as in Photo 8 and retighten the bolt but with the bar held closed with the aid of a clamp. You should then check that it has not been closed too much. The runner should rise and fall smoothly without catching.

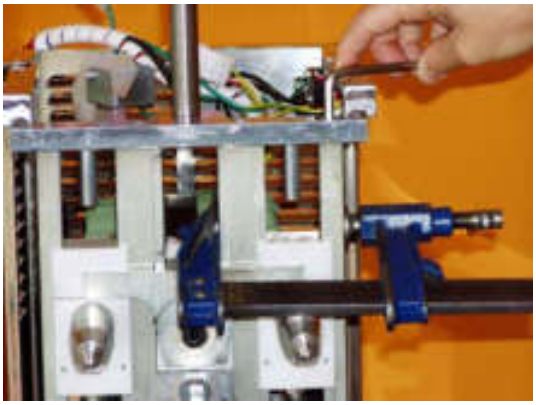

8

- If the runner play is incorrect, a set of cogs with special (oversized) teeth needs to be ordered from the manufacturer.

3.- CHECKING IF CLEANING AND GREASING IS NEEDED

With the cups vertical, and the bridge at its highest point, lift the divider locking tab  and turn the cups in reverse direction (turn the reducer pulley in a clockwise direction) until the cups are facing each other. (Fig. 9)



9



10

Raise the cups by hand to the vertical position and release them (Fig.10). The cups should rise and fall freely without any stiffness of movement. If they move stiffly, the guides should be cleaned and greased.

4. - PULLER RUNNER BOLTS

These bolts were originally of a “countersunk Allen” type and did not allow adequate tightening. They were factory fitted from machine No. 2067126 onwards. If this is the case, they should be changed for hexagonal head bolts (Fig. 11). The top bolt is M6x16 and the bottom one M6x30. The adjustment of the lower bearing pin should also be checked. This is done as follows:



11



12

Turn the reducer pulley until the central runner  allows the bottom bearing to be extracted. Extract the two bolts and check that the pin with the bearing remains fixed to the runner, without play.
If play is detected, extract it and use a punch to produce protuberances (Fig. 12) in order to eliminate this play.

THE HEAD OF THE PIN MUST NOT SIT IN THE RUNNER HOLE, EVEN WITHOUT A SECURING BOLT

Apply thread-locking adhesive to the bolt threads (Fig. 13 and 14) and fit them.



13



14

TAKE CARE WHEN TIGHTENING THE TOP BOLT, AS IT IS THREADED DIRECTLY ONTO PLASTIC AND COULD PASS THROUGH IT

5.- TRAY SHAFT SUPPLEMENTS

The machines were not originally fitted with these parts, which were incorporated from No. 2116011 onwards.
These parts (reference Nos. 1405017 and 1405018) are to prevent the juice entering through the cup runner covers from reaching the central guides.
If your machine does not have these parts, they should be fitted. It is simply a question of fitting them as in Photo 15 and greasing the joints to prevent the juice from leaking through the slots.



15

6.- BLADE RUNNER COVER

This part originally measured 214mm (Fig. 16) and was later lengthened to 230mm (Fig. 17). This change was made from machine No. 2077001 onwards, and the new one can be distinguished by its rounded edges. (Fig.17)

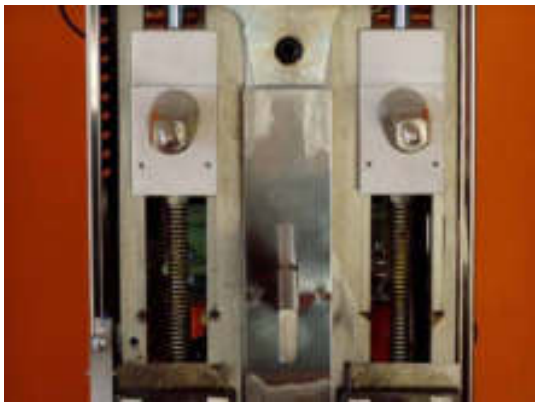

16

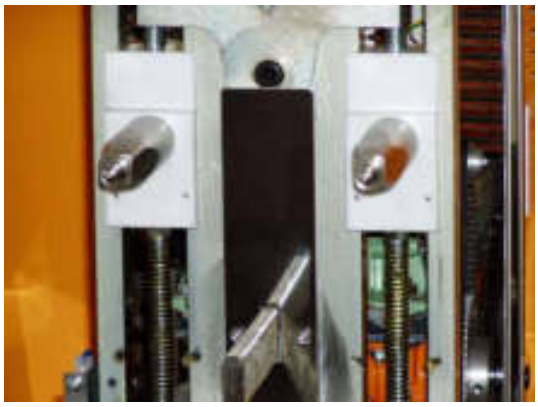

17

If your machine is fitted with the short one, it should be replaced with the new model. The three runner covers have to be bent slightly forwards by around 20mm (Figure 18), and at the front, grease should be added in the area where they rub (Figure 19).

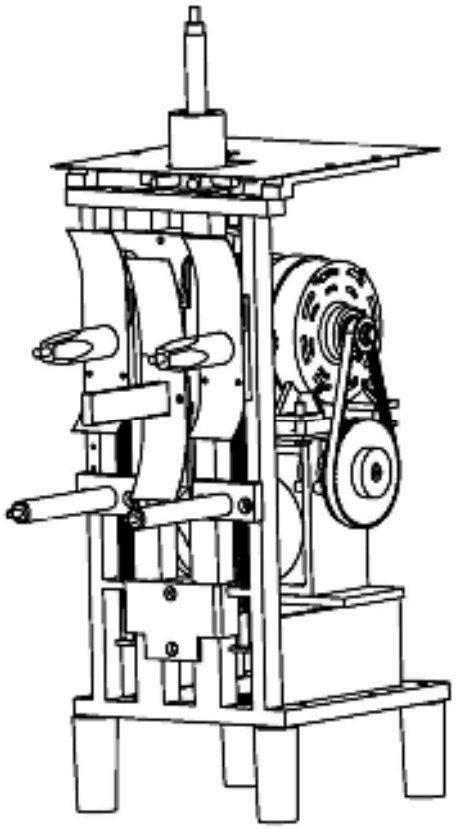

18

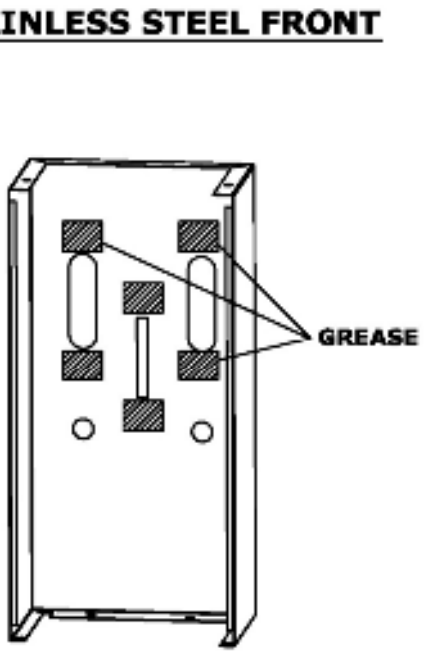

19

7.- REPLACING A CUP RUNNER

Remove the chassis closing device  and extract the runner with its rod.
The rod has to be released from the two bottom bolts.
Fit the rod into the new runner and refit it into the chassis.
Fit the chassis closing device and adjust the top position of the bars so that the runners have the minimum play without dragging. This can be done with the aid of a clamp.
Check the movement play between cogs and bridge, as explained in the "CHANGING THE BRIDGE" section.

8.- ADJUSTING THE POSITION OF THE CUPS

Move the cups to the vertical position. The runners should be touching the top end stops. (Fig. 20)



20



21

Turn the reducer pulley anticlockwise and observe how the sectors of the copier  move towards the bottom bearing. (Fig. 21)

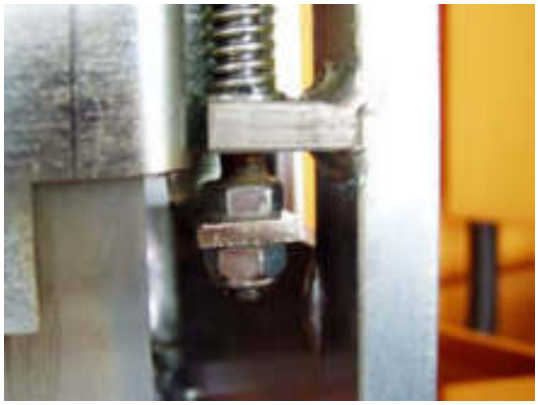

22



23

The bearing needs to be raised or lowered by adjusting the bottom nuts on the pullers (Fig. 22), so that the bearing enters the copier barely touching it.
Keep turning the reducer pulley, and at the point where the cups stop turning and begin their descent, **they should be facing each other (Fig. 24 and 25), at the same level, and the runners should come away from the end stops at the same time (Fig. 23)**



24



25

9.- REPLACING A REDUCER, A COPIER OR A ROD

In these three cases the reducer needs to be released from its position, however, the most important point is that when refitting the reducer, the center of the reducer must be aligned perfectly with the center of the chassis. To do so, use a 12Ø rod inserted into the reducer shaft. This should be centered between the two central bars of the chassis. (a 12Ø drill bit can be used) (Fig. 26)

IT IS IMPOSSIBLE TO POSITION THE CUPS UNLESS THE REDUCER IS PROPERLY CENTERED

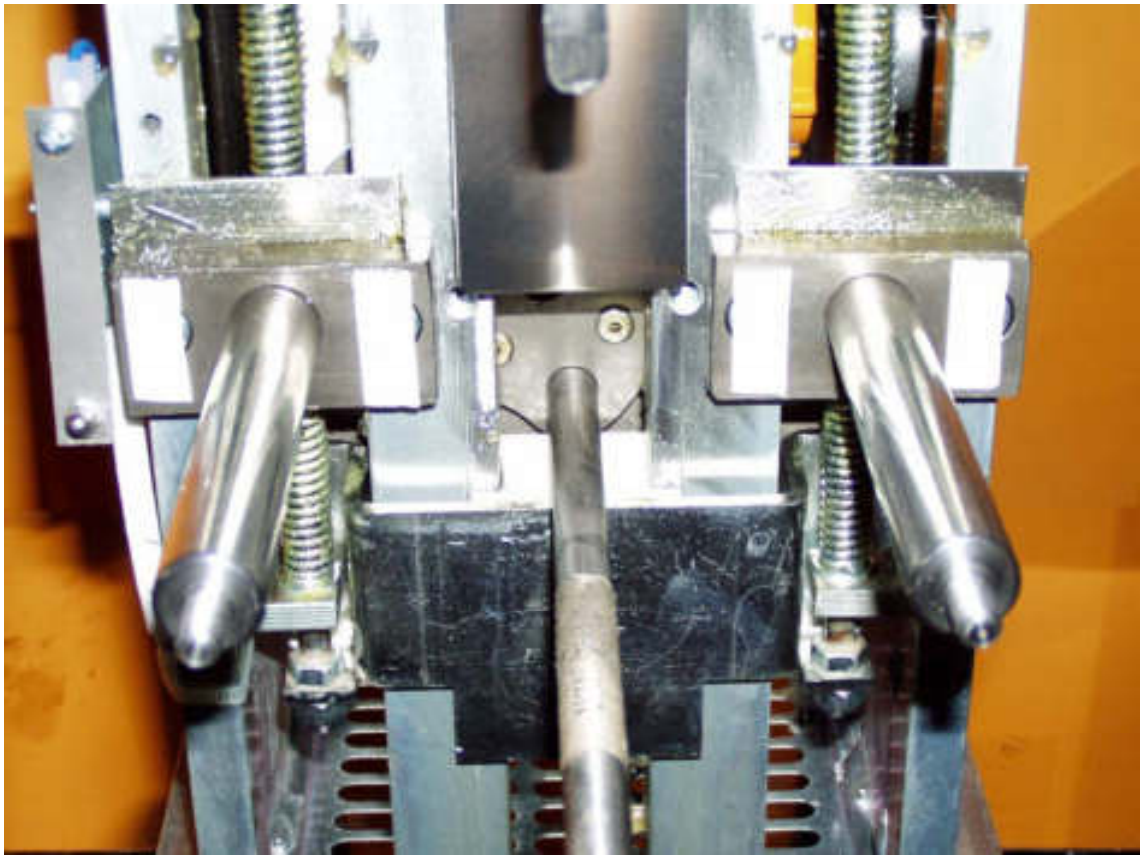

26

10.- ADDING A “CUP RUNNER BRIDGE”

This part is designed to prevent the cogs  from being able to come away from the toothed area of the bridge . This part was factory fitted from machine No. 2117054 onwards. If you need to carry out work on any machine not having this part, it should be fitted.
This is done as follows:

Raise the rod  to its highest point and position it completely vertically. To do so, turn the reducer pulley until this is achieved. (Fig. 27)

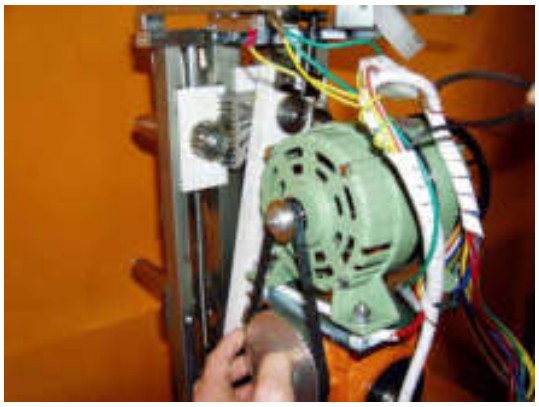

27



28

Once the rod is at its highest position, fit the new part. This should rest on the bridge and be centered, and held in place using a clamp (Figs. 28, 29, 30) to ensure that it does not move during drilling. To do so, a cup runner cover  will have to be removed.

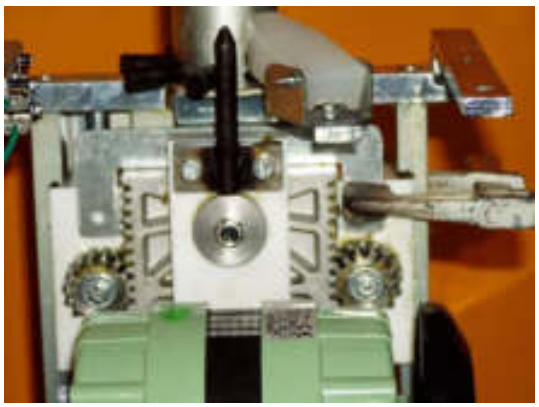

29

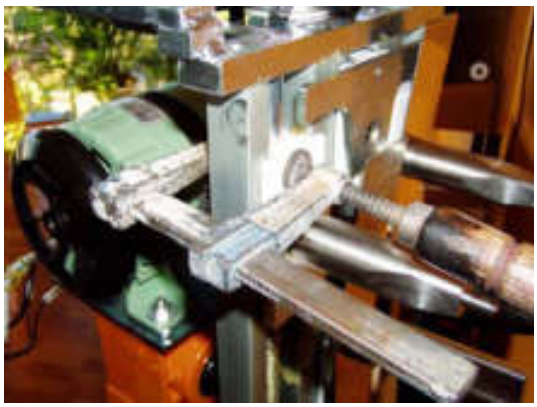

30

Drill 4.75Ø holes to a depth of 25mm. (Fig. 31)
The motor will prevent the holes from being drilled completely horizontally, however this is not important.



31

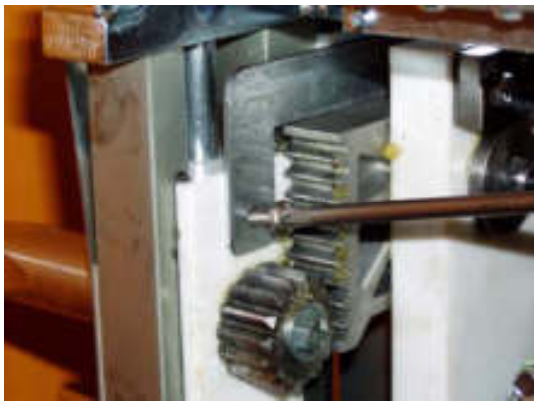

32

Fit the screws (Fig. 32). They must not be over-tightened.

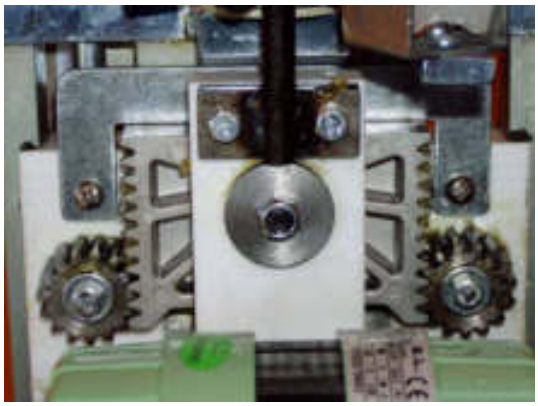

33



34

See the final result, Photos 33, 34 and 35.



35



36

To check proper functioning:
Turn the reducer pulley clockwise until the cups are horizontal. Turn the cups by hand to the vertical position and release them (Fig. 36). On releasing them, the runners should reach the top end stop under the action of the springs, without manual assistance. Grease the runners and the springs if necessary.