CONTENTS

1 PRECAUTIONS FOR SAFETY AND USE 2

2 TECHNICAL DATA 4

3 INSTALLATION AND POSITIONING 6

4 INSTRUCTIONS FOR TECHNICAL STAFF 7

4.1 Plumbing hookup 7

4.2 Electrical connection 7

4.3 Using the water softener (on models with this feature only) 9

5 SET-UP 10

5.1 Display Contents 10

5.2 Note on display of temperatures 10

5.3 Parameter programming procedure 10

5.4 Modifiable parameters 11

5.5 Alarm trigger time thresholds 11

5.6 Adjusting detergent and rinse aid dispensing 12

5.7 Adjusting the regeneration frequency (models with softener only) 12

5.8 Memorisation procedure 12

5.9 Table of parameters 13

6 MALFUNCTIONS SHOWN ON THE DISPLAY (FOR THE TECHNICIAN) 13

7 INSTRUCTIONS FOR THE USER 14

7.1 Control panel 14

7.2 Before washing 15

7.3 First use each day (tank and boiler empty) 15

7.4 Choosing the program 16

7.5 Changing the program (not possible once the program has started) 16

8 MAINTENANCE AND CLEANING 18

8.1 Daily cleaning of filters 19

8.2 Routine inspection of the spray arms (once a week) 19

8.3 Lengthy periods out of use 19
9 TROUBLESHOOTING..... 20
10 MALFUNCTIONS SHOWN ON THE DISPLAY (FOR THE USER) 21

SMEG Thanks you for choosing one of its products.

Read all the instructions in this manual carefully to become familiar with the right conditions for the proper use of your dishwasher.

TECHNICAL INSTRUCTIONS

	These are intended for the qualified staff who are to install, commission and test the appliance and carry out any servicing and repairs.

INSTRUCTIONS FOR THE USER

	These provide recommendations for use, a description of the controls and the correct procedures for cleaning and maintaining the dishwasher.

1 PRECAUTIONS FOR SAFETY AND USE

	**THIS MANUAL IS AN INTEGRAL PART OF THE DISHWASHER AND MUST ALWAYS BE KEPT INTACT TOGETHER WITH THE APPLIANCE.**
	POSITIONING, HOOKUP, COMMISSIONING, TROUBLESHOOTING AND REPLACING THE POWER CABLE**MUST ALWAYS BE CARRIED OUT BY QUALIFIED STAFF**.
	THE**APPLIANCE MUST BE GROUNDED** AS REQUIRED BY ELECTRICAL EQUIPMENT SAFETY STANDARDS.

THE DISHWASHER IS INTENDED FOR PROFESSIONAL USE ONLY AND MUST ONLY BE USED BY AUTHORISED STAFF. IT IS DESIGNED TO WASH TABLEWARE (PLATES, CUPS, BOWLS, OVEN DISHES AND CUTLERY) AND SIMILAR ITEMS IN THE RESTAURANT AND INSTITUTIONAL CATERING SECTOR, AND COMPLIES WITH THE INTERNATIONAL STANDARDS ON ELECTRICAL AND MECHANICAL SAFETY

(**CEI-EN-IEC 60335-2-58/61770**) AND ELECTROMAGNETIC COMPATIBILITY (**CEI-IEC-EN 55014-1/-2, 61000-3;4, 50366**).

THE MANUFACTURER **DECLINES ALL RESPONSIBILITY** FOR INJURY OR DAMAGE CAUSED **BY FAILURE TO COMPLY** WITH THE INSTRUCTIONS IN THE MANUAL, BY **INCORRECT USE**, BY **TAMPERING** WITH EVEN JUST ONE PART OF THE APPLIANCE AND BY THE USE OF **NON-ORIGINAL SPARE PARTS** .

THIS APPLIANCE IS MARKED AS REQUIRED BY EU DIRECTIVE **2002/96/EC**, WASTE ELECTRICAL AND ELECTRONIC EQUIPMENT (WEE).
BY MAKING SURE THAT THIS PRODUCT IS DISPOSED OF CORRECTLY THE USER HELPS TO PREVENT POTENTIAL DETRIMENTAL EFFECTS ON HEALTH AND THE ENVIRONMENT.

WHEN DECOMMISSIONING THE APPLIANCE COMPLY WITH THE LOCAL WASTE DISPOSAL REGULATIONS.

FOR FURTHER INFORMATION ON THE TREATMENT, RECOVERY AND RECYCLING OF THIS PRODUCT, CONTACT THE COMPETENT LOCAL OFFICE, THE DOMESTIC WASTE COLLECTION SERVICE, OR THE SHOP WHERE THE PRODUCT WAS PURCHASED.

	**THE SYMBOL OF THE RUBBISH BIN WITH A BAR ACROSS IT** ON THE PRODUCT OR IN THE TECHNICAL DOCUMENTATION INDICATES THAT THIS PRODUCT MUST NOT BE TREATED AS ORDINARY DOMESTIC WASTE BUT MUST BE CONSIGNED TO THE SPECIAL COLLECTION POINT FOR THE RECYCLING OF ELECTRICAL AND ELECTRONIC EQUIPMENT.
	**NEVER PLACE SOLVENTS SUCH AS ALCOHOL OR TURPENTINE**, WHICH MIGHT CAUSE AN EXPLOSION, INSIDE THE APPLIANCE. NEVER LOAD DISHES DIRTY WITH ASH, WAX OR PAINTS.
	**NEVER USE THE DISHWASHER OR ANY PART OF IT AS A LADDER, SUPPORT OR STAND FOR PEOPLE,** ANIMALS OR ANY OBJECT. LEANING OR SITTING ON THE OPEN DOOR OF THE DISHWASHER MIGHT CAUSE IT TO TIP OVER, PUTTING PEOPLE IN DANGER. NEVER LEAVE THE DISHWASHER DOOR OPEN SINCE PEOPLE MIGHT TRIP OVER IT.
	**DO NOT DRINK ANY WATER LEFT** IN THE DISHES OR DISHWASHER AT THE END OF THE WASHING PROGRAM.
	**THE APPLIANCE IS NOT SUITABLE FOR USE BY JUVENILES OR PERSONS WITH REDUCED PHYSICAL, SENSORIAL OR MENTAL CAPACITIES**, OR THOSE WITHOUT THE NECESSARY KNOWLEDGE AND EXPERIENCE. SUCH PERSONS MAY ONLY USE THE APPLIANCE UNDER THE SUPERVISION OF A PERSON RESPONSIBLE FOR THEIR SAFETY.

2 TECHNICAL DATA

		CW510M	CW-CWH 510
	kPa (bar)	200-600 (2 ÷ 6)	200-600 (2 ÷ 6)
Water intake temperature	°C	15°C – 60°C	15°C – 60°C
Intake water hardness (models with softener)	°f	15°f-60°f	15°f-60°f
Rinse cycle water consumption	l	3.2	3.2
Boiler capacity	l	6	6
Tank capacity	l	11	11
Standard cycle duration with intake water at 50°C	s	120/150/180	90/120/180
Noise level	dB(A)	< 70	< 70
Degree of protection	IPX	4	4/5
Net weight	Kg	52	63/60/79
Power supply cable type	◄HAR►	H07RN-F	H07RN-F
Fuse	A	4	4

SEE APPLIANCE LABEL						
VOLTAGE	**FUSE PROTECTION**	**TANK HEATING**	**MOTOR**	**BOILER (1.5X3)**	**TOTAL CONNECTION**	**POWER CABLE**
400V-50Hz/3/N/PE	16A	1.1kW	0.7kW	4.5kW	5.2kW	5X2.5
230V-50Hz/3/PE	20A	1.1kW	0.7kW	4.5kW	5.2kW	5X2.5
230V-50Hz/1/N/PE	25A	1.1kW	0.7kW	3kW	3.7KW	3X4
230V-50Hz/1/N/PE	16A	1.1kW	0.7kW	1.5kW	2.2kW	3X2.5

VOLTAGE	**FUSE PROTECTION**	**TANK HEATING**	**MOTOR**	**BOILER (1.5X3)**	**TOTAL CONNECTION**	**POWER CABLE**
230V-50Hz/1/N/PE	20A	1.1kW	0.7kW	2.8kW	3.4kW	3X2.5

CAVITY DIMENSIONS FOR BUILT-UNDER INSTALLATION

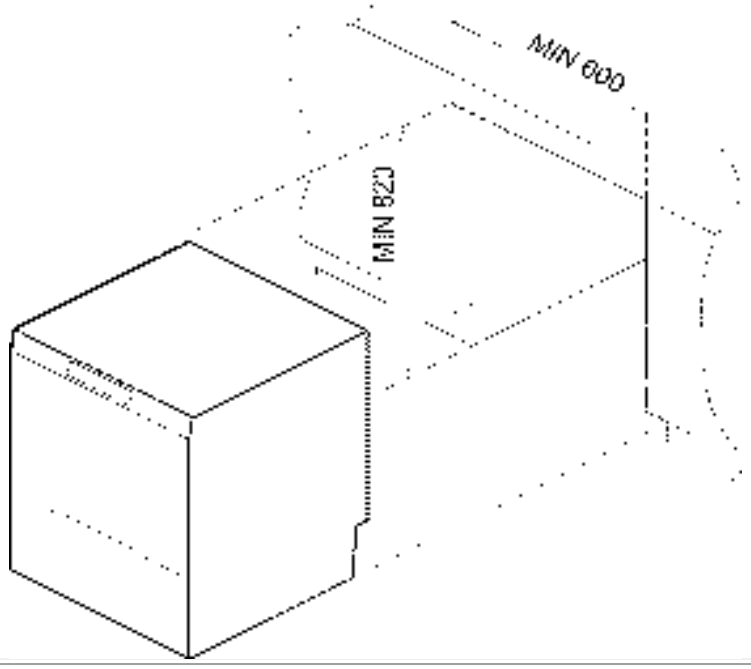

APPLIANCE DIMENSIONS AND CONNECTION POSITIONS

(*N.B. : VALUE “1000” - max 600 if siphon with valve is used)

(**N.B. : VALUE - max 60 - heat exchanger)

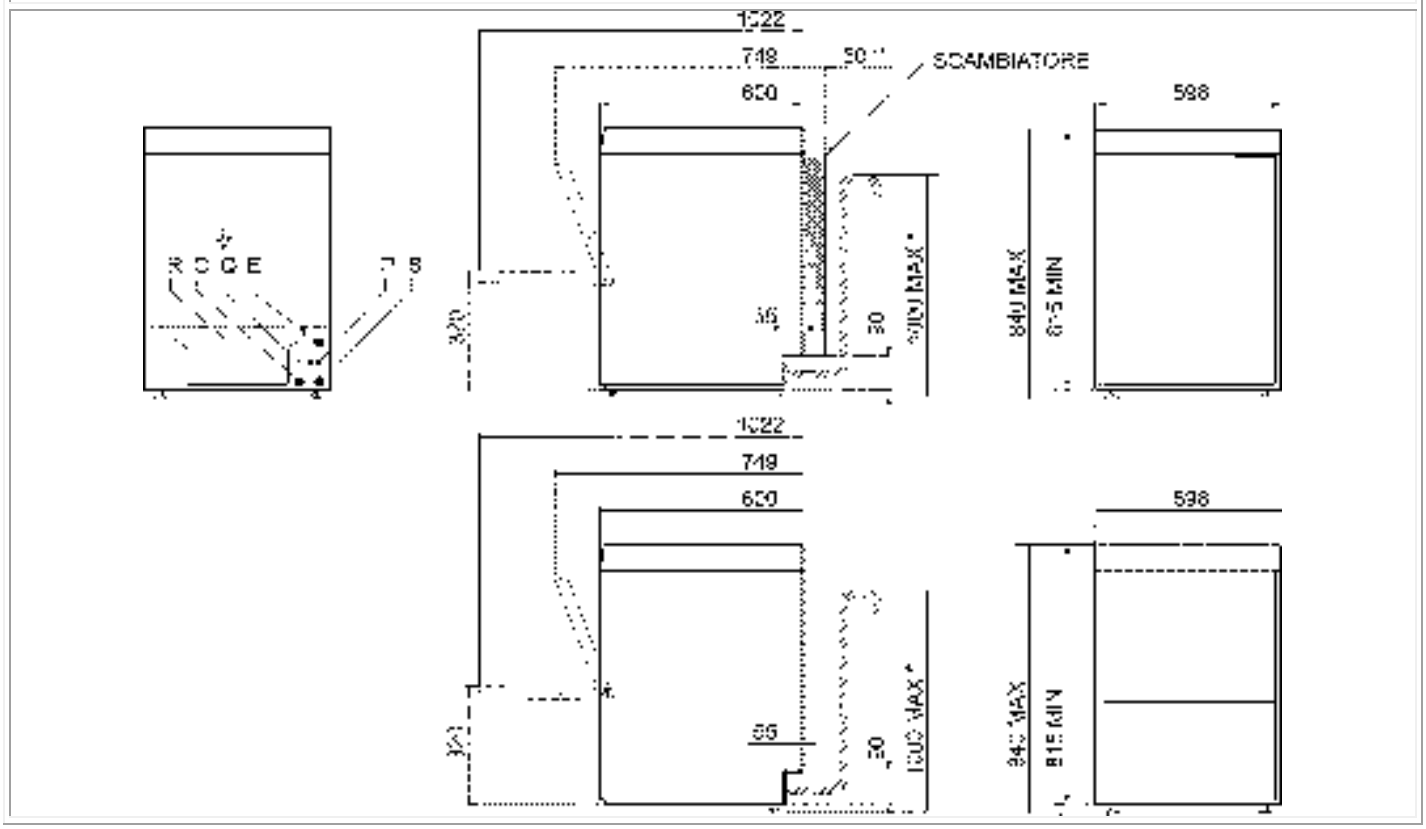

APPLIANCE DIMENSIONS AND CONNECTION POSITIONS

(**NB – VALUE “1400” WITH ASTERISK: max 1000 if siphon with valve is used)

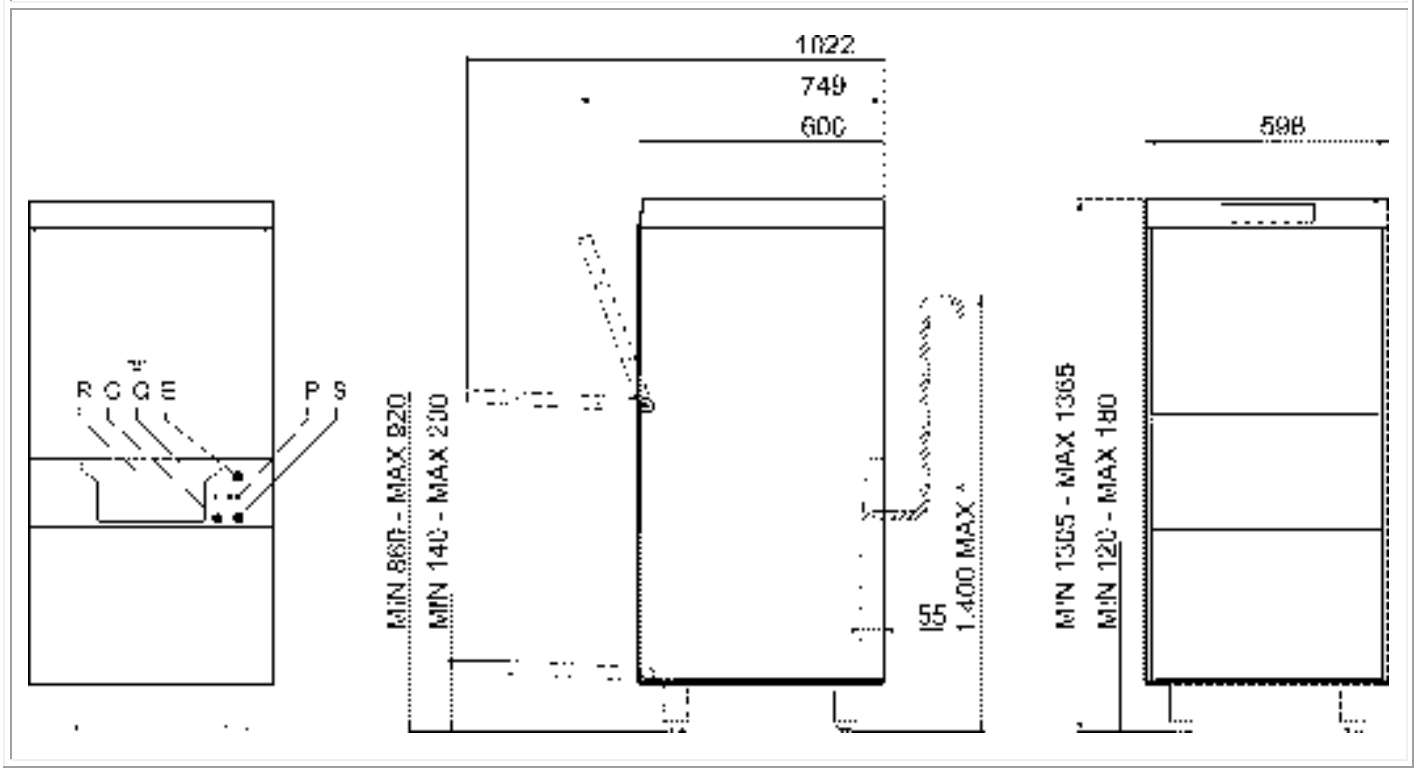

KEY TO LETTERS USED IN DIAGRAM	
R	LOWER BACK PANEL
C	FILLER HOSE
Q ⏚	EARTH TERMINAL
E	ELECTRICITY SUPPLY CABLE
P	PERISTALTIC HOSES
S	DRAIN HOSE
T	EXTERNAL DISPENSER POWER SUPPLY CABLE ENTRY POINT

3 INSTALLATION AND POSITIONING

INSTALLATION and POSITIONING

Bring the dishwasher to the installation site, remove the packaging and check the appliance and components for damage; any damage found must be reported to the transporter in writing.

The packaging components (plastic bags, expanded polystyrene, nails, etc.) must not be left within reach of children and pets since they are potentially dangerous.. All packaging materials used are environment-friendly. They can be kept without constituting any hazard, or may be disposed of at a specialist waste disposal centre. The plastic components suitable for recycling are marked as follows: PE polyethylene: external packaging film, bag containing the instructions, protective bags. PP polypropylene: straps. PS expanded polystyrene: corner guards, top of packaging. Wooden and cardboard components can be disposed of in accordance with the relevant regulations. When the product is decommissioned it must not be dumped in the environment; it must be disposed of in accordance with the relevant regulations. All metal parts are in stainless steel and can be removed. The plastic parts are marked with the symbol identifying the material used.

POSITIONING:

⚠	**Caution:** the indoor system and premises in which equipment for institutions is installed must comply with the relevant regulations.

The manufacturer declines all liability for direct or indirect injury or damage deriving from failure to comply with these regulations.
Before installation, check that there are no objects or materials in the vicinity which may be damaged by steam or splashes of washing solution, or that any such items are suitably protected.
Place the dishwasher in the chosen point and remove the protective film.
Level the dishwasher (with the aid of a spirit level) on its adjustable feet to ensure that it is stable; all other mounting solutions must be approved by the manufacturer.

4 INSTRUCTIONS FOR TECHNICAL STAFF

4.1 Plumbing hook-up

Water supply and drain connection

The water pipelines and electricity supply cable lead out of the bottom right-hand corner of the appliance. Connect the water intake hose to a connector with ¾" threaded fitting, fitting the filter **A** provided (in models with acquastop, the filter and ring-nut form a single unit).
The connection to the water mains must only be made with new hoses; the use of old or worn hoses is not permitted.

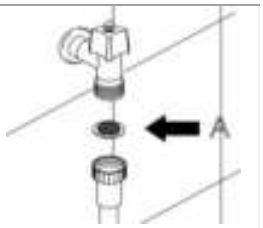

The dynamic water supply pressure must be between 2 and 6 bar; if it is higher a pressure reducer must be installed. If the pressure is less than 2.5 bar it might be necessary to fit a special pump on the appliance to ensure optimal performance. Contact the After-Sales Service.
It is essential to fit a main stop tap on the water intake deliver pipeline; the tap must be accessible after installation of the appliance, so do not install it behind the dishwasher. The stated cycle duration applies to appliances supplied with hot water >50°C<60°C If the dishwasher is supplied with cold water, the cycle duration might increase depending on the intake water temperature. The dishwasher is fitted with a drain pump and can operate with drain connections on the floor or wall. Refer to the connection diagram for the maximum permitted height of wall drains – (see TECHNICAL DATA)

Caution: make sure that the intake and drain hoses are not bent, constricted or crushed after installation.

When installing the drain hose to a siphon with valve, the maximum height of the drain outlet is reduced to 600 mm.

4.2 Electrical connection

The dishwasher and any additional equipment must be connected to the electrical system by authorised, skilled staff, in accordance with the relevant regulations; also comply with the technical instructions for the connection.
The total rated power is stated on the appliance's technical data plate.
The electrical protection devices fitted for the dishwasher must serve this appliance only.
The user must have a **master switch and a differential safety breaker, with rating suitable for the appliance's characteristics, installed on the electricity supply line in accordance with the relevant regulations.**
These switches must be installed close to the dishwasher, be easily accessible after installation, and provide complete disconnection from the electrical mains in overvoltage class III conditions.

⚠	**Warning !!!** The dishwasher is always powered up unless the master switch is turned off.
⚠	Connect the appliance to the user's earth system. The ⏚ terminal for the connection is in the bottom right-hand corner of the appliance. The earth wire (PE) is yellow-green in colour, the neutral wire (N) is blue and the live wires (L1, L2, L3) are black, grey and brown. In the event of single-phase connection (230V-1N~), the connection to the electrical mains **must** be made using a cable with plug **compliant with the relevant regulations**.
⚠	**THE POWER SUPPLY CABLE MUST BE REPLACED BY THE MANUFACTURER OR AN AUTHORISED SERVICE CENTRE TO PREVENT ALL RISKS.**

First start-up

The electrical protection system must undergo a functional test before the appliance is put into operation.
The appliance must be installed and/or inspected by qualified staff, who will start it up for the first time and provide the relevant operating instructions.

Preparing for use (important)

The rinse aid dispenser is fitted on all models, the detergent dispenser only on some.
If both dispensers are present put the external detergent and rinse aid containers in place and insert the respective intake hoses on the rear of the appliance into them.
Red hose: detergent
blue hose: rinse aid
NOTE: It takes about 10-15 wash cycles before they arrive in detergent and rinse tank and boiler

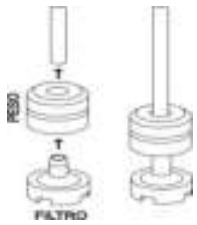	Before inserting the hoses into the containers, fit the weights (needed to ensure that they always draw in liquid from the bottoms of the containers) and the filters onto their ends as shown. If the detergent dispenser is not factory-fitted, it can be retrofitted after ordering the relative kit.

As an alternative an external dispenser can be fitted, making the electrical connection by means of an H05 RN-F 2x0.5 mm electrical cable, which can be laid along the route shown in the TECHNICAL DATA diagram and connected as shown in the wiring diagram supplied with the dishwasher.
The dispenser must operate on 230V/50 Hz with maximum power absorption of **15 W**.
Connect to the detergent dispenser outside the dishwasher using the red hose mentioned above.

4.3 Using the water softener (on models with this feature only)

	The quantity of lime in the water (which indicates its hardness) causes whitish marks on dry dishes and dishes also tend to lose their shine over time. The dishwasher is equipped with an automatic water softener which removes the substances that cause hardness from the water with the aid of regenerating salt.

	The first time the dishwasher is used, a litre of water must be poured into the tank with the salt. Whenever the tank is filled, always take care to ensure that the cap is firmly closed. The mixture of water and detergent must not get into the salt tank, as this would impair operation of the regeneration system. In this case warranty cover will be forfeited.

IMPORTANT:

Whenever the type of detergent or rinse aid is changed, it is **ABSOLUTELY ESSENTIAL** to **flush out the peristaltic pumps** by placing the external intake pipes in water for a few cycles.

Always use only **products specifically recommended** for use in a dishwasher.

Failure to comply with this recommendation leads to **forfeiture of the warranty entitlement** on the appliance's water system.

The **internal pipes** of the detergent and rinse aid pumps **should be replaced** by the After-Sales Service **every 12 months or 15,000 wash cycles** and operation of the diaphragm rinse aid pump should be checked.

5 SET-UP



Set-up
During first start-up, the functions/parameters listed below must be set or adjusted:

A series of operations can be carried out when the dishwasher is first installed to customise it to the user's requirements. To modify the parameters, proceed as follows.

5.1 Display Contents

The two green digits provide the following information:

- Appliance off but powered up: all decimal points on both digits
- Appliance on: Boiler temperature
- Washing phase: Tank temperature
- Pause phase: Boiler temperature
- Rinse phase: Boiler temperature
- Programming phase: See parameter programming section
- Error message: See error messages section

5.2 Note on display of temperatures

Both the Boiler and the Tank temperatures provide instantaneous readings of the current value picked up by the probe, but due to the thermal inertia of the probe or its seat, wait about 1' after the heating element power absorption reading to obtain the real temperature.

5.3 Parameter programming procedure

To access the programming menu, proceed as follows:

1) switch the appliance off with the (On Off) key
2) Within 6 seconds, press key P1 (SHORT wash) 7 times. Wait for the 6 seconds to pass; at the end P0 appears on the display
3) Use key P1 to select the parameter to be modified
4) Press the PUMP-OUT KEY to display the parameter for modification
5) Modify the parameter by pressing key P1
6) Confirm the change by pressing the PUMP-OUT key
7) Select the other parameters for modification in the same way and proceed as described above
8) After setting all the appliance parameters, press the On Off key to quit.

5.4 Modifiable parameters

This table lists the model choice or cycle and temperature option parameters.

F/M	ID	Description	510M	510	Notes
M	P0	Appliance Type	02	03	Construction version Do not modify
F	P1	Appliance Model	02	03	Do not modify
M	P2	Boiler temperature	82C	80C	Step 1 degree WARNING: The effective temperature in the boiler will be 5° C above the set P2 (example if set to 80°, in this temperature it is the detachment of the resistor, to see the true temperature wait 1' = approximately 85° C)
M	P3	Tank temperature	58C	58C	Step 1 degree
M	P4	Thermostop option	01	01	0=off 1=on
M	P5	Soft Start option	01	01	0=off 1=on
M	P6	Boiler temperature offset	00	00	Real=measured + Offset
M	P7	Tank temperature offset	04	04	Real=measured + Offset
M	P8	Real temperature display	01	01	0= filtered, 1= real
F	P9	Tank probe type	01	01	Do not modify

Note for P6 and P7: negative numbers are indicated by illumination of both decimal points (e.g.: -12 → "1.2."

5.5 Alarm trigger time thresholds

This table lists all the safety device trigger time thresholds.

F/M	ID	Description	Default	Min.	Max	Notes
F	A0					
F	A1	Boiler max. heating time	20 min	5	60	Step = 1 min
F	A2	Tank max. heating time	60 min	5	60	Not active with PL ON
F	A3	Maximum water intake time	5 min	1	20	Step = 1 min
F	A4	Maximum emptying wait time	1 min	1	2	Step = 1 min

5.6 Adjusting detergent and rinse aid dispensing

⚠	**Caution:** ensure that the appliance is not powered up - ELECTRIC SHOCK HAZARD

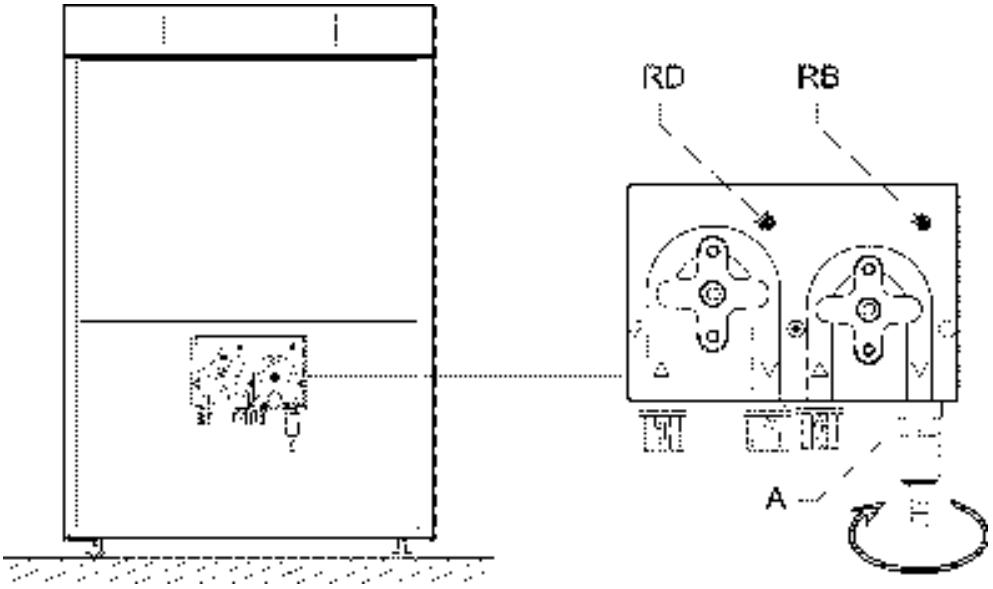

RD	Detergent dispensing regulator screw (**OPTIONAL**)
RB	Rinse aid dispensing regulator screw

Important: If the pump not displace rinse aid, check valve located inside "A" unscrew anticlockwise.

RD/RB: Dispensing regulator screw. (on some models only)
Adjustments are made using the adjuster screw AS SHOWN. The **quantity** dispensed is **reduced** by turning **anticlockwise** and **increased** by turning **clockwise**.

5.7 Adjusting the regeneration frequency (models with softener only)

5.8 Memorisation procedure

To access the programming menu, proceed as follows:

1) switch the appliance off by pressing the On Off key
2) Hold down the **and** keys simultaneously for 6 seconds; H0 appears on the display
3) Use the key to modify the parameter; H0,H1,H2,H3,H4,H5 and H0 will appear on the display in cyclic sequence
4) Press the **On Off** key to confirm the change and quit programming mode.

⚠	With values over 60°dF an external water treatment device must be used and the regeneration frequency must be set at H00

5.9 Table of parameters

This table shows the relationship between the intake water hardness and the quantity the resins are able to treat; regeneration is required once the appliance has performed the set number of cycles. Regeneration cycle duration: 12 minutes.

Hardness (°dH German degrees)	Hardness (°dF French degrees)	Setting level	Resin duration in wash cycles
Regeneration off	Regeneration off	H00	Function off
8.5	15	H01	94 wash cycles
11	20	H02	83 wash cycles
17	30	H03	53 wash cycles
22,5	40	H04 default	33 wash cycles
28	50	H05	27 wash cycles
33.5	60	H06	20 wash cycles

6 MALFUNCTIONS SHOWN ON THE DISPLAY (FOR THE TECHNICIAN)

The dishwasher is able to identify a number of malfunctions and show them on the display. If the problem persists after the dishwasher has been switched off and back on, proceed as described below:

E.1	Boiler temperature probe malfunction	Boiler temperature probe disconnected or not working
E.2	Tank temperature probe malfunction	Tank temperature probe disconnected or not working
E.3	Water intake malfunction	Water intake not completed in the maximum time allowed Check dynamic pressure in intake system, clean water intake filter. If the problem persists: - tank pressure switch has failed (continuous empty reading) - leak from pipe connected to air trap - drain siphon blocked - the tank is empty due to siphoning when the drain pump is not running - air trap dirty / clogged - faulty solenoid
E.4	Boiler overheating.	Reduce boiler temperature to 80°. Circuit board relay failed, check circuit board and inspect boiler heating element for damage
E.5	Tank overheating	Reduce boiler temperature to 58°. Circuit board relay failed, check circuit board and inspect tank heating element for damage
E.6	Water not pumped out of tank 	Inspect the filters for dirt and check that the drain hose is not blocked, bent or crushed. Check that the drain pump is not blocked by dirt by removing the insert on the sump (from inside the tank) If the problem persists: - with tank empty: tank pressure switch has failed (continuous full reading) - with tank full: drain pump failure If the system fails to pump out because the drain pump is fouled (as a result of incorrect filter positioning), proceed as follows: Bale out the dishwasher with a basin and disconnect it from the electrical mains. Unscrew the screw **A**, release the tang **B** and lift it. Check that the impeller of the drain pump underneath the cover

		turns freely, and is free from dirt, limescale residues, or pieces of glass. Never use tools, screwdrivers, scissors, etc.
E.7	Boiler heating malfunction (does not heat up)	-circuit board relay failure - boiler heating element faulty or "furred" with limescale - boiler temperature probe faulty or incorrectly positioned
E.8	Tank heating malfunction (does not heat up)	-circuit board relay failure - tank heating element faulty or "furred" with limescale - tank temperature probe faulty or incorrectly positioned
E.9	Microprocessor failure	Replace circuit board

7 INSTRUCTIONS FOR THE USER

7.1 Control panel



	On-off button
	Total emptying button (tank and boiler)
	Regeneration key (only if softener is fitted)
	L1 power on LED
	L2 pump-out in progress LED
	L3 no salt LED (only if softener is installed)
	L4 no salt LED (only if softener is installed)
	Short cycle key
	Medium cycle key
	Long cycle key
	L5 short cycle program LED
	L6 medium cycle program LED
	L7 long cycle program LED

7.2 Before washing

⚠	Use only detergents and rinse aids for industrial dishwashers. Do not use detergents intended for hand washing. We recommend the use of Smeg products, specially developed for this dishwasher.
⚠	When topping up the tanks, take care not to swap the products; this might damage the dishwasher and cause malfunctions.

Do not mix different detergents; this would damage the dispenser device. **Failure to comply** with this recommendation leads to **forfeiture of the warranty entitlement** on the appliance's water system.
Industrial dishwasher detergents may cause serious irritation. Comply carefully with the instructions provided by the detergent producer on the pack.

	CHECK			
1. Turn on the mains water tap (user)	2. The level of detergent and rinse aid in the containers.	3. That there is regenerating salt in the relative container (if fitted).	4. That the filters are in place, the spray arms rotate, and there are no foreign bodies in the dishwasher.	5. Switch on the master switch (user): the word "OFF" appears on the display.
				

7.3 First use each day (tank and boiler empty)

Display shows	Actions and what happens
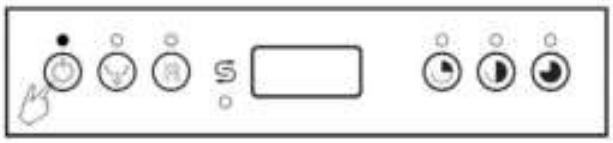	**Door closed and master switch on ON:** Press ⏻ and hold it down for 2-3 seconds; the ON/OFF light and the two digits on the display light up.
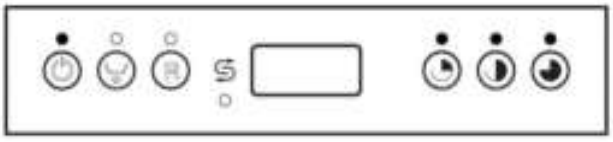	The dishwasher fills the tank automatically. At the end of this phase, when the tank is full, P appears on the display and program lights **L5, L6 and L7**are lit.
WARNING! If the appliance is connected to cold water, wait at least 15' before moving on to the next phase to give the tank time to reach the correct washing temperature.	

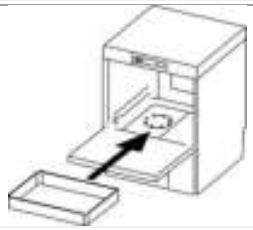	Load the dishes and close the door.
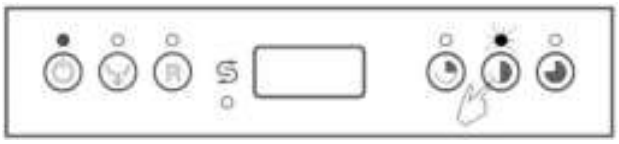	Select the programme required by pressing one of the three buttons; the LED of the selected program flashes and the other two go out. The cycle starts once the key has been held down for about 2". While washing is in progress the display shows the water temperature in the tank. During rinsing, it shows the boiler temperature.
	At the end of the program the program LED comes on and “**End**" flashes on the display.
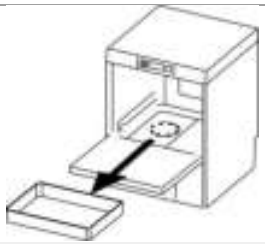	Unload the dishes
When the door is closed again, the last program is repeated.	

7.4 Choosing the program

PROGRAM	TYPE OF DIRT	DURATION (510M)	DURATION (510)
Short	Glasses and cups	Short 2’	Short 1.5’
Medium	Glasses, cups and plates with light dirt	Medium 2.5'	Medium 2'
Long	Very dirty dishes and cutlery	Long 3’	Long 3’

(*) The cycle duration stated above is guaranteed if the appliance is connected to hot water > 50°C <60°C

If the dishwasher is supplied with cold water, the cycle duration might increase depending on the intake water temperature and the "thermostop" setting.

7.5 Changing the program (not possible once the program has started)

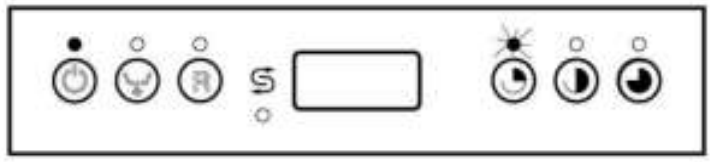	If the master switch is not turned off, the appliance sets on the last cycle performed. To change it, press the key of the program required; the light comes on.

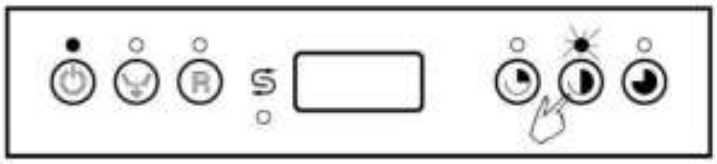

To confirm hold down for about 2". The LED starts to flash and the washing cycle starts.

Glasses

Load glasses upside down. (see photo)

Cutlery

Use the basket(s) provided. Load cutlery loose, preferably with the handle at the bottom, taking care not to injure yourself with fork prongs or knife blades.

Plates

The basket is able to take **12** soup plates or 18 dinner plates. Remove solid residues (bones, fruit peel, stones, etc.) and first soak plates with dried residues of cheese, egg, etc. in water.

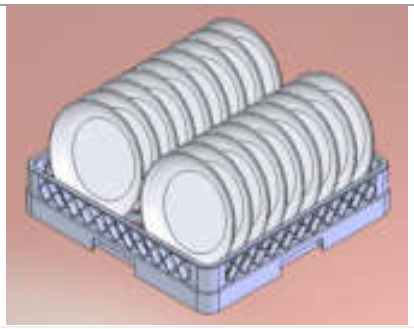

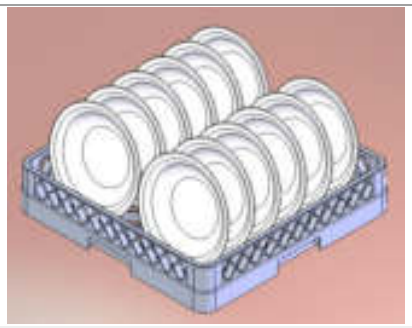

TOTAL PUMP-OUT AT THE END OF THE DAY

The dishwasher is able to perform a pump-out and self-cleaning cycle with automatic switch-off.

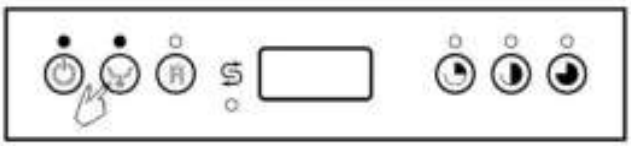

Press the pump-out button for about 2", the LED flashes and the pump-out and automatic tank cleaning phase starts.

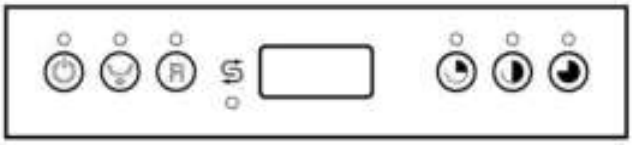

When pump-out is complete the appliance switches to "**OFF**" status. (only 2 digits lit on the display)

After a total pump-out the filters should be cleaned as described in the relevant point.

Never switch the dishwasher off with water in the tank; always pump out first.
Models with water softener: if cycles are added to total pump-out.
Resin regeneration + flushing is performed. The pump-out phase lasts about 15' after which the appliance switches off automatically.

Resin regeneration (for models with water softener)

Once the number of washing cycles set during installation has been completed, as indicating that the resins will be spent and regeneration is required, the LED above the ® key flashes even during the

cycle. Therefore, during the working day resin regeneration **is RECOMMENDED** following the procedure described below.

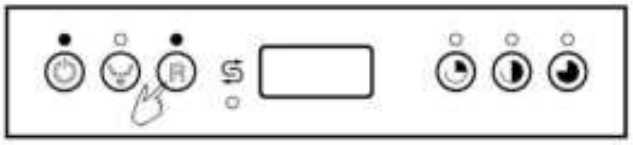	Press the Ⓡ key; the LED flashes and the regeneration phase starts. It lasts about 10 minutes, during which time the LED keeps flashing.
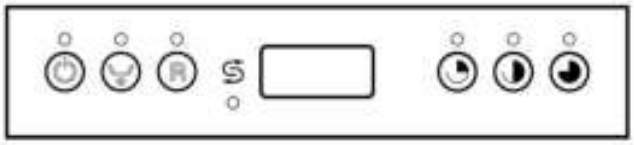	When the regeneration phase is complete, the appliance switches to "**OFF**" status (only 2 digits lit on the display). To reuse the appliance, repeat procedure 7.3

Filling up with regenerating salt (for models with water softener)

	Caution: use only salt of the specific type, do not use cooking salt. Salt must be added when the LED underneath the symbol shown in the box on the left lights up. Top up with salt **when there is no water in the tank** to prevent washing water from getting into the water softener device. The salt tank has a capacity of about **1 kg of coarse-grained salt** . The salt tank is in the bottom of the appliance's tank. After removing the basket, undo the cap and pour the salt in using the funnel supplied. Remove any salt residues around the opening before screwing the cap back on.

8 MAINTENANCE AND CLEANING

Although no particular scheduled maintenance is required, users are advised to have the dishwasher checked by a specialist technician twice a year.
N.B. the manufacturer accepts no liability for wilful damage or damage deriving from carelessness, neglect, failure to comply with instructions, regulations and standards or incorrect connections, which lead to forfeiture of warranty cover.

If possible, leave the door ajar when not in use;
Clean surfaces thoroughly and often with a damp cloth; use neutral, non-abrasive detergents which do not use chlorine compounds, which corrode and damage stainless steel.

Do not use the products mentioned above even when cleaning the floor underneath or in the vicinity of the dishwasher,
to ensure that fumes or drops cannot damage the steel surfaces.

⚠	The dishwasher has **IPX4** protection but pointing water jets straight at it for cleaning is **forbidden**

8.1 Daily cleaning of filters

Cleaning the filter at the end of each working day

Remove the filters (simply lift them out as shown here), taking care that no large residues fall into the sump underneath. Clean them to remove residues and rinse with plenty of water, then put them correctly back in place; **do not use sharp or pointed tools.** Clean away any limescale deposits to prevent excessive build-ups;	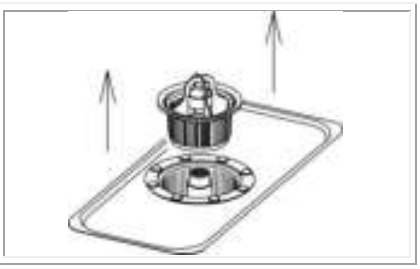

8.2 Routine inspection of the spray arms (once a week)

Remove the top and bottom spray arms by unscrewing the central screw and unscrew the caps from the ends of the rinsing arms as shown. **Do not unscrew the nozzles.** Clean the holes and nozzles under a jet of clean running water; **do not use tools which might cause damage**. Reassemble the spray arms with care.

TOP SPRAY ARMS stainless steel	BOTTOM SPRAY ARMS stainless steel	
	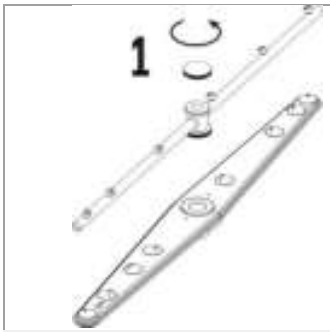	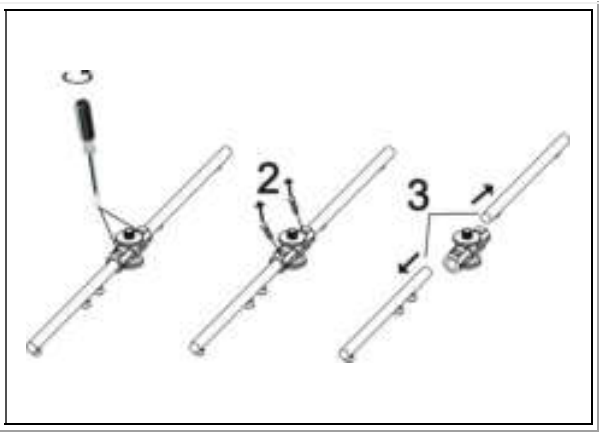

Clean the outside of the appliance with a damp cloth and neutral soap, rinsing and drying thoroughly.

8.3 Lengthy periods out of use

If the dishwasher is to be out of use for a fairly long period of time, **the detergent and rinse aid dispenser devices must be emptied to prevent crystallisation and damage to the pumps:** remove the intake hoses from the detergent and rinse aid containers and place them in a container of clean water, then perform a few wash cycles followed by a complete pump-out.
Finally, turn off the master switch, close the water intake valve and leave the door ajar until the interior is completely dry. The detergent and rinse aid intake hoses must be put back into the containers when the dishwasher is returned to service, **taking care not to swap them over** (red hose = detergent, blue hose = rinse aid).

9 TROUBLESHOOTING

How to deal with any problems without calling the after-sales service

PROBLEM	POSSIBLE CAUSE	POSSIBLE REMEDY
LIGHT **L1** DOES NOT COME ON	Mains power failure	Check electrical mains connection.
WASHING PROGRAM DOES NOT START	The dishwasher has not yet finished filling.	Wait for the 3 program lights to come on.
POOR WASHING RESULTS	Spray arm washing holes blocked by dirt or limescale	Remove spray arms and clean them (9.2 Periodic checks)
	Filter fouled	See “Cleaning the filter during the day”
	Too little or unsuitable detergent or rinse aid	Check type and quantity of detergent.
	No or not enough detergent or rinse aid being supplied: detergent or rinse aid not being taken from the relative container.	Check that the intake filter is not fouled. If you are unable to solve the problem, call the after-sales service.
	Plates/glasses badly arranged	Arrange plates/glasses correctly.
	Low washing temperature	Check temperature shown on the display, call the after-sales service if less than 50°C
	Inappropriate cycle set	Increase wash cycle duration, especially if dirt has dried on.
INADEQUATE RINSING	Dynamic pressure of mains water insufficient Spray arm nozzles fouled Limescale in boiler	Check mains water pressure. Check that water intake filter is not fouled. Clean rinsing nozzles. If you are unable to solve the problem, call the after-sales service.
STAINS ON GLASSES AND CUTLERY	Rinse aid unsuitable or not being delivered correctly. Water hardness above 12°dF or large amounts of dissolved salts	Check container of rinse aid and whether it is suitable for the type of mains water. If the problem persists, contact the after-sales service.
WATER IN TANK AFTER PUMP-OUT	Drain hose incorrectly positioned or partially obstructed.	Check that the dishwasher drain hose and rain are unobstructed and the drain is not too high up; see connection diagram.
DISHES NOT PROPERLY DRIED	Low rinsing temperature due to thermostop OFF and/or water intake temperature below 50°	Check that the water supplying the appliance is at least at 50° If the problem persists call the after-sales service

10 MALFUNCTIONS SHOWN ON THE DISPLAY (FOR THE USER)

The dishwasher is able to identify a number of malfunctions and show them on the display.
If the problem persists after the dishwasher has been switched off and back on, proceed as described below:

E.1	Boiler temperature probe malfunction	Switch the dishwasher off and back on and perform another cycle; if the problem persists call the after-sales service.
E.2	Tank temperature probe malfunction	Switch the dishwasher off and back on and perform another cycle; if the problem persists call the after-sales service.
E.3	Water intake malfunction	Water intake not completed in the maximum time allowed Check dynamic pressure in intake system: the water intake filter may need cleaning, the tap may be turned off or the rinsing nozzles may be fouled.
E.4	Boiler overheating.	Switch the dishwasher off and back on and perform another cycle; if the problem persists call the after-sales service.
E.5	Tank overheating	Switch the dishwasher off and back on and perform another cycle; if the problem persists call the after-sales service.
E.6	Water not pumped out of tank 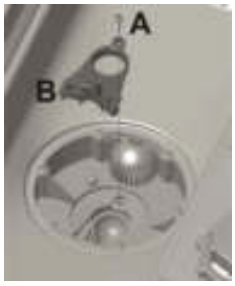	Inspect the filters for dirt and check that the drain hose is not blocked, bent or crushed. Check that the drain pump is not blocked by dirt by removing the insert on the sump (from inside the tank) If the problem persists: - with tank empty: tank pressure switch has failed (continuous full reading) - with tank full: drain pump failure If the system fails to pump out because the drain pump is fouled (as a result of incorrect filter positioning), proceed as follows: Bale out the dishwasher with a basin and disconnect it from the electrical mains. Unscrew the screw **A**, release the tang **B** and lift it. Check that the impeller of the drain pump underneath the cover turns freely, and is free from dirt, limescale residues, or pieces of glass. Never use tools, screwdrivers, scissors, etc.
E.7	Boiler heating malfunction (does not heat up)	Switch the dishwasher off and back on and perform another cycle; if the problem persists call the after-sales service.
E.8	Tank heating malfunction (does not heat up)	Switch the dishwasher off and back on and perform another cycle; if the problem persists call the after-sales service.
E.9	Microprocessor failure	Switch the dishwasher off and back on and perform another cycle; if the problem persists call the after-sales service.

INFORMATION AND AFTER-SALES SERVICE FOR SMEG PRODUCTS

COMMERCIAL DISHWASHERS

Our Sales Department staff will be able to provide you with information about prices and special offers.

Our After-Sales Department will be able to provide you with guidance about keeping your appliance functioning correctly and put you in touch with your nearest authorised Service Centre.

Our whole product offering can be viewed at:

www.smegfoodservice.com

International customers, please contact your local SMEG distributor.

Smeg S.p.A
Via Leonardo da Vinci, 4 - 42016 Guastalla (Reggio Emilia)
Tel. +39 0522 8211 - Fax + 39 0522 821453
email foodservice@smeg.it

19.390.4175.03	*22/10/2013*
Manual Ed.	***Date***