UNOX®

EVEREO®

SERVING-TEMPERATURE MAINTAINER

INSTALLATION MANUAL
Translation of original instructions

EN

CAUTION: Read the instructions before using the appliance

SERVING-TEMPERATURE MAINTAINER

SAFETY REGULATIONS

SAFETY REGULATIONS FOR INSTALLATION AND MAINTENANCE 4

INTRODUCTION

PICTOGRAMS 6

INSTALLATION

UNPACKING THE APPLIANCE 7
CHECKING PACKAGE CONTENTS 9
POSITIONING 10
POSITIONING 12
ELECTRICAL CONNECTIONS 13

SAFETY REGULATIONS FOR INSTALLATION AND MAINTENANCE

- Read this manual carefully before installing or maintaining the appliance. Store this manual with care for future reference.
- The appliance can be used by children aged 8 years and above, by people with reduced physical, sensory or mental capabilities, or by people lacking the experience or knowledge needed, provided that they are supervised or have received instructions relative to the safe use of the appliance and that they understand the inherent dangers. Children must not play with the appliance. Cleaning and maintenance must be performed by the user and must not be performed by children without supervision.
- All installation, assembly and non-routine maintenance work must be performed exclusively by qualified technicians, authorised by the manufacturer, in compliance with the regulations in force in the user country and the regulations on systems and safety in the workplace.
- Before starting installation or maintenance work, disconnect the appliance from the electrical power supply.
- Before installing the appliance, check that the systems are compliant with the installation standards in the specific country and with the specifications indicated on the appliance serial plate.
- Interventions, tampering or modifications which have not been expressly approved and do not comply with the instructions in this manual could cause damage, injury or death.

- Furthermore, interventions, tampering or modifications which have not been expressly approved and do not comply with the instructions in this manual invalidate the warranty, as well as any other contractual relationship with the manufacturer and its subsidiaries/associates.
- Installation or maintenance that fails to respect the indications in this manual may cause damage, injury or death.
- When the appliance is being fitted, people not involved with the installation may not pass through or occupy the work space.
- The packaging material is potentially dangerous. It must be kept out of the reach of children and animals, and correctly disposed of in compliance with local regulations.
- The ratings plate provides essential technical information that is of utmost importance for any appliance maintenance or repairs. Do not remove, damage or modify the plate.
- Failure to follow these regulations may cause damage, injury or death; invalidates the warranty and any other contractual relationship with the manufacturer and its subsidiaries/associates; and relieves the manufacturer of all liability.
- The parts protected by the manufacturer or one of its agents cannot be altered by the installer.
- Appliance with noise level <70dBa

Dear Customer,
Thank you for choosing to purchase this appliance; we hope this is just the beginning of a long-lasting partnership.

We recommend that you read this manual carefully, as is contains all of the instructions on how to maintain the aesthetic and functional qualities of your product.

PICTOGRAMS
The installation and user instructions are valid for all models unless otherwise specified by the following pictograms:

Danger! Situation presenting immediate danger, or a hazardous situation which could cause injury or death.

Risk of fire

Risk of electric shock

Read the instruction manual

Risk of burns

Tips and useful information

Earthing symbol

Equipotential symbol

Consult another section

1 UNPACKING THE APPLIANCE

When you receive the product, check the package for any visible damage. If it is damaged, promptly contact the manufacturer and DO NOT install the appliance.

Before transporting the appliance to its installation point, make sure that:
- it passes through doorways easily;
- the floor supports its weight.

Transport using mechanical equipment only (e.g. a pallet jack).

The packaging material is potentially dangerous. It must be kept out of the reach of children and animals, and correctly disposed of in compliance with local regulations.

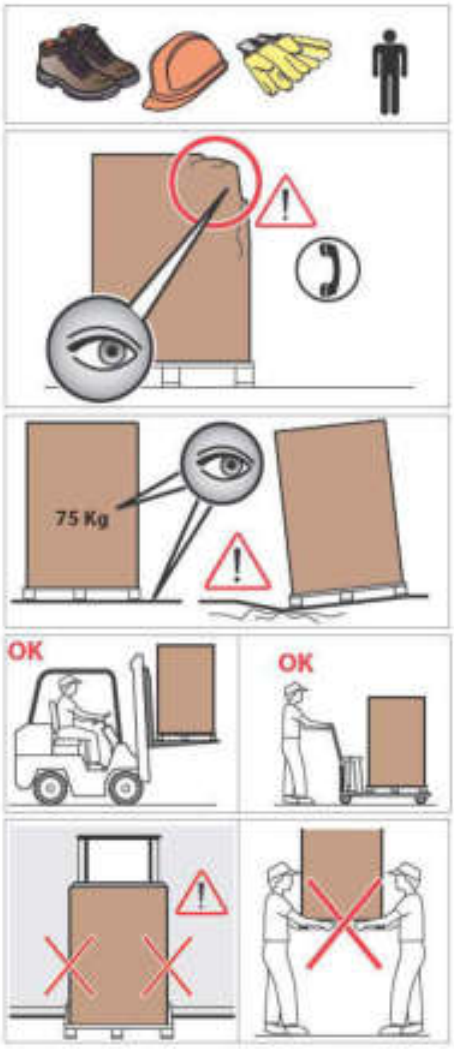

EN

The manufacturer works constantly to ensure its products are as environmentally friendly as possible, reducing energy consumption and waste.
The manufacturer wishes to protect the environment and invites the consumer to dispose of waste in the correct recycling bins.

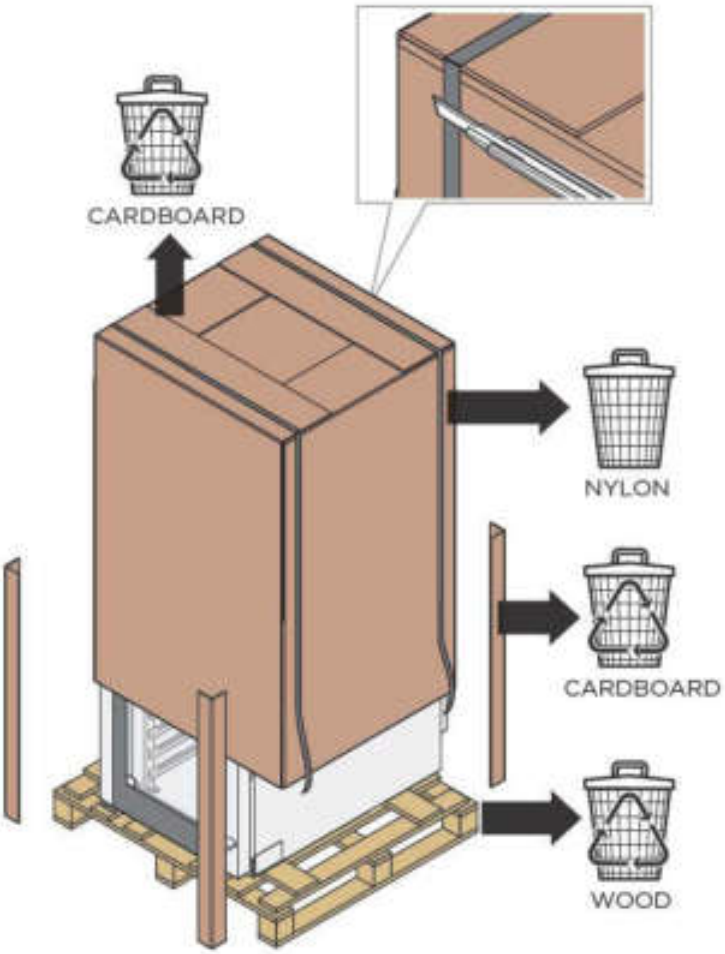

2 CHECKING PACKAGE CONTENTS

Before installing the appliance, check that the following components are included in the package and are undamaged.

If a component is missing or damaged, please contact the manufacturer.

- (1) serving-temperature maintainer;
- (2) technical documents (use and installation manual, "Technical specifications" sheet). Alternatively, electronic documentation is provided.

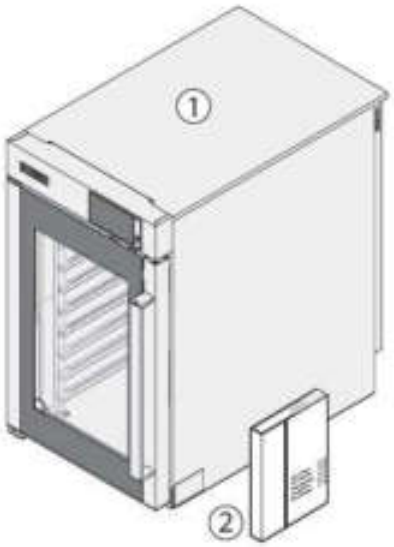

3 GETTING STARTED

Removing the film

Slowly remove the protective films from the appliance. Clean any glue residue with appropriate solvents without using tools, abrasive detergents or acids that could spoil the surfaces.

The protective films are potentially dangerous and must be kept out of the reach of children and animals, and correctly disposed of in compliance with local regulations.

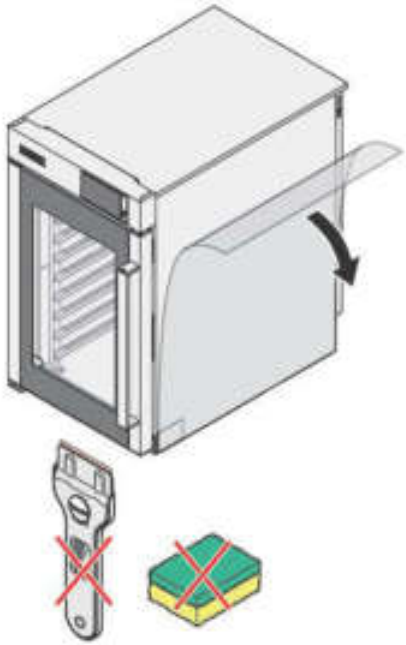

EN

4 POSITIONING

The installation area

Install the appliance in areas:
- that are compliant for cooking food;
- that are adequately ventilated;
- that comply with the laws in your country regarding system safety/ safety in the workplace;
- protected from the weather;
- with temperatures from +5°C to +35°C maximum;
- that have maximum humidity of 70%.

Do not install the appliance near other appliances that reach high temperatures, to avoid damaging electrical parts.
The appliance is not suitable for recessed installation.
Make sure that the floor supports the weight of the appliance at full capacity.

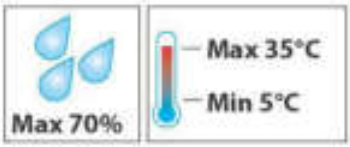



Installation clearance

Position the appliance respecting the clearance indicated in the diagram and so that the back of the appliance is easily accessible for making the necessary connections and for maintenance work.

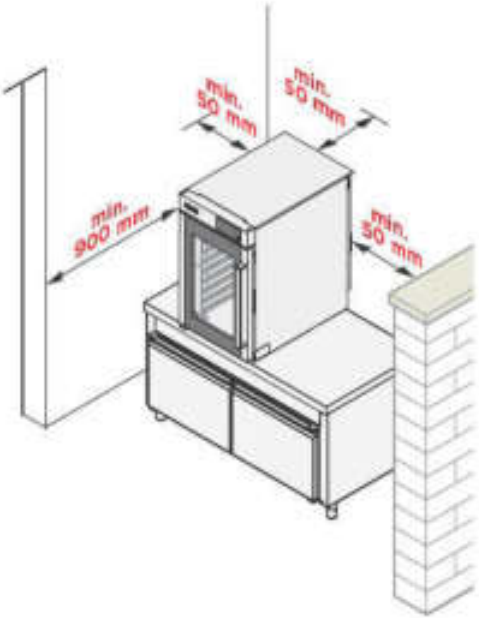

Do not install the appliance near flammable or heat-sensitive materials, walls or furniture.
If this is necessary, protect them with appropriate non-flammable materials in compliance with fire-prevention regulations.

EN

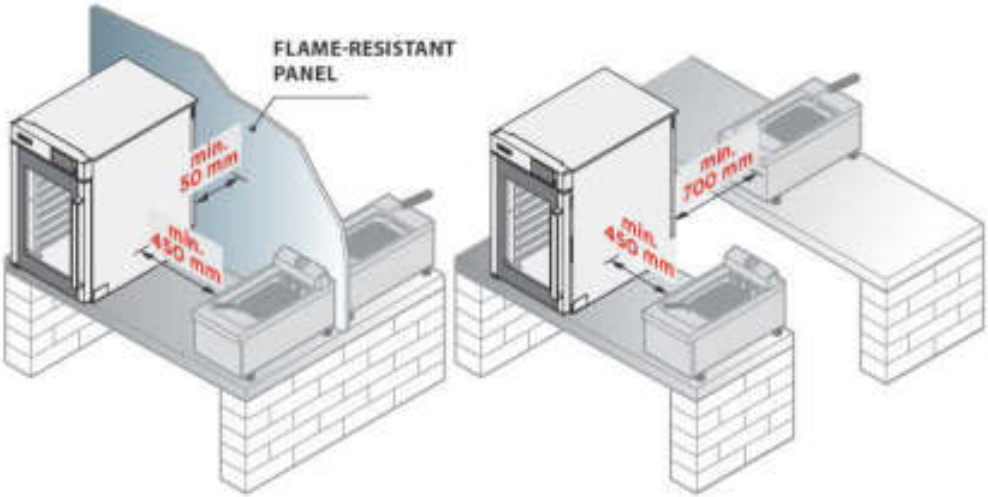

5 POSITIONING

The appliance should only be placed on a table/cabinet with the following characteristics:

- stable and perfectly level;
- unmoveable;
- non-flammable and heat resistant;
- able to support the appliance weight at full load without deforming or experiencing structural failure.

The appliance cannot be placed directly on the floor or above other appliances (e.g. ovens, provers, etc.).

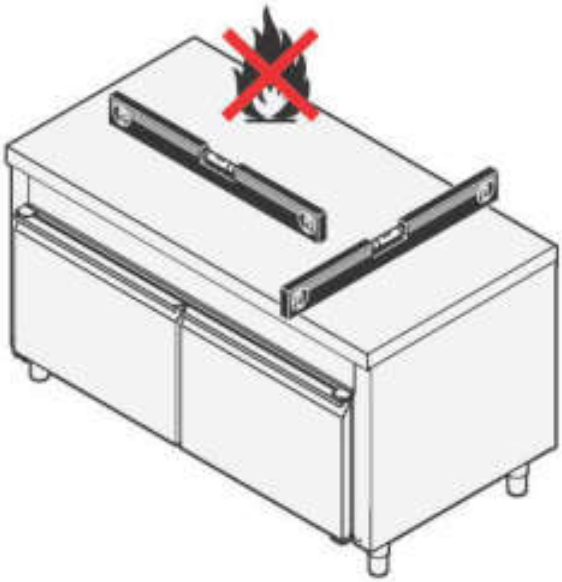

6 ELECTRICAL CONNECTIONS

Before installing the appliance, read the "Safety regulations" section on page 4 carefully.

Connections to the power mains and the electrical systems must comply with the regulations in force in the country where the appliance is installed; and all connections must be performed by qualified personnel authorised by the manufacturer.

Failure to follow these regulations may cause damage or injury; invalidates the warranty and any other contractual relationship with the manufacturer and its subsidiaries/associates; and relieves the manufacturer of all liability.

Before connecting the appliance to the mains electricity, always compare the power supply data with the appliance data as specified on the ratings plate.

The appliance is released from the factory with the power cable and plug already connected to the terminal. Do not make any other type of electrical connection or dimensional modification to the cable other than extensions, replacing it only with a cable with the same specifications as the original factory cable (type of rubber, cross-section, etc.).

The cable must be replaced by UNOX or by its technical assistance service, or, in any case, by a person with a similar qualification in order to prevent any hazards.

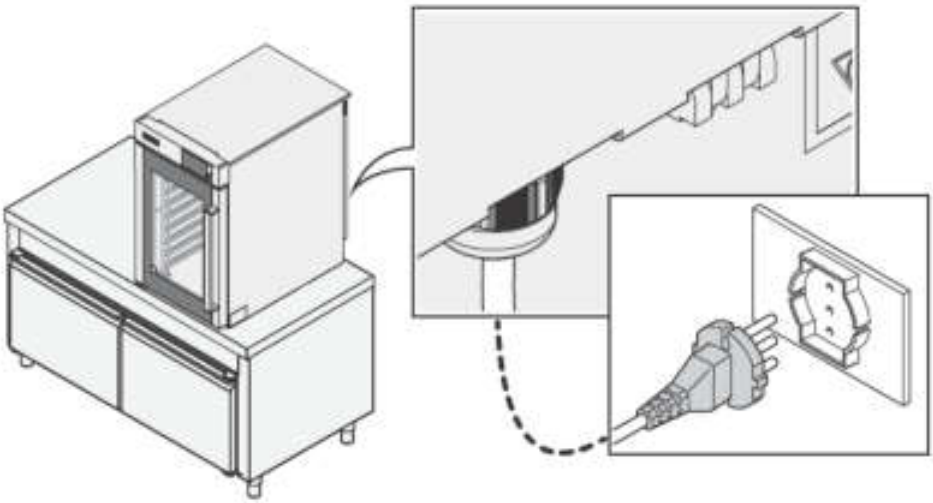

EN

The wiring diagrams, cable specifications and technical data are indicated on the "Technical specifications" sheet supplied with the appliance.

For the electrical connections to be correct, the appliance must:

- Be wired into an equipotential system in accordance with current regulations. This connection must be performed between different appliances with the terminal marked with the equipotential symbol . The cable must have a maximum cross-section of 10 mm2 (in accordance with standard CEI EN 60335-2-42:2003-09) and must be yellow-green in colour.
- Be connected to the mains earth (green-yellow wire).
- Be connected to a thermal differential switch in compliance with the regulations in force (0.03A, type A).
- Be connected to a main circuit-breaker that enables complete disconnection in category III overvoltage conditions.

Checks

- The copper jumper on the terminal board and the electrical cable must be fastened together under the screw in its tightening direction, and the electrical connections must be securely tightened before connecting the appliance to the electricity mains.
- Check for any electrical dispersion between the phases and the earth, and for electrical continuity between the external casing and the mains earth.
- Check that the power supply voltage does not deviate from the nominal voltage specified on the appliance ratings plate when the appliance is operating. If it does differ, wire the phases as specified on the "Technical specifications" sheet enclosed.